Pure & Easy

ASSEMBLY INSTRUCTIONS

NOTICE

IMPORTANT, RETAIN FOR FUTURE REFERENCE: READ CAREFULLY
WICHTIG, FÜR SPÄTERE NACHSCHLAGE AUFBEWAHREN: SORGFÄLTIG LESEN
IMPORTANTE, GUARDAR PARA REFERENCIA FUTURA: LEER ATENTAMENTE
IMPORTANTE, CONSERVARE PER RIFERIMENTI FUTURI: LEGGERE ATTENTAMENTE
IMPORTANT, À CONSERVER POUR RÉFÉRENCE FUTURE : LIRE ATTENTIVEMENT

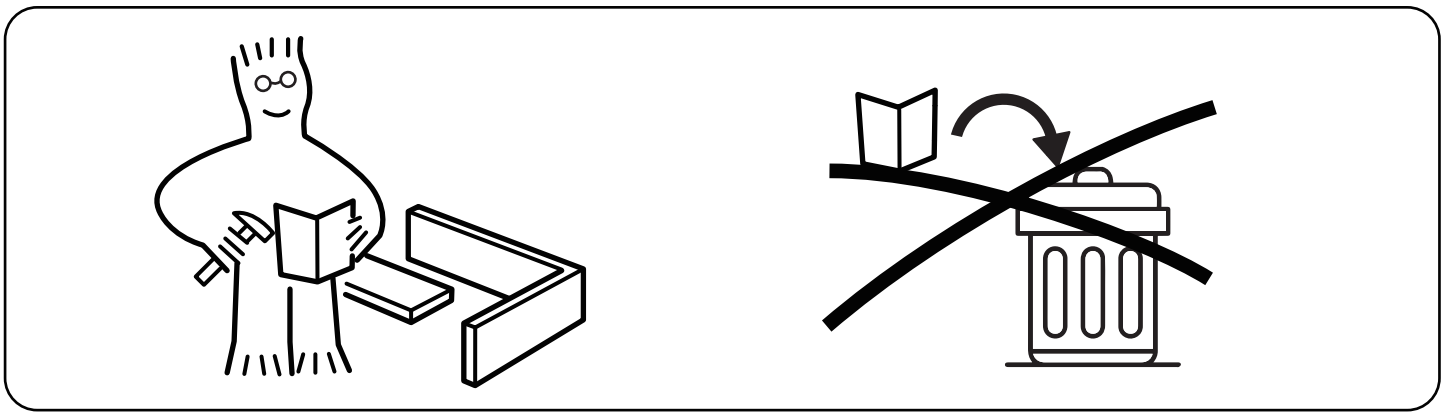

PRE-INSTALLATION INSTRUCTIONS

1. Please read through this instruction before attempting to assemble, operate or install.
2. Save all packing materials until assembly is complete to avoid accidentally discarding smaller parts or hardware.
3. Please install the fountain on a flat, level surface close to an electrical outlet.
4. This product is designed for outdoor use, it can be used indoors, however splashing may occur.

SAFETY PRECAUTIONS

1. As with any large container of water, fountains are to be used carefully with adult supervision. They are not intended to be used as “kid pools” and present a risk to small children and infants. Injury or accidental drowning could result. An adult should supervise children when they are around the pump.
2. As with any electrical appliance, make sure the pump plug is dry before you plug it into an outlet, and make sure you are not standing in the water - electrical shock could result.
3. Filled fountain weighs a considerable amount. Make sure your set-up area can support at least 300 lbs.
4. Excessive weight or pressure on any of the fountain sections may cause it to tip or fall over. Keep pets and children away from any of the fountain sections.
5. For fountains, it is normal for some splashing to occur. Protect surrounding surfaces as needed

6. The pump on the fountain has no user serviceable parts. Only an authorized service repre sentative should service the pump. Do not open the sealed pump housing as this may result in electrical shock. Refer to enclosed pump maintenance guide for cleaning.
7. Always unplug the pump from the electric outlet before cleaning and handling.
8. Use with clean water only. Do not place it in other liquids. Do not allow the pump to run dry.
9. Use the proper power source as indicated on the pump label.
10. Equip the electrical power for the pump with a ground fault circuit interrupter (GFCI).
11. The fountains are not designed to withstand extreme temperatures. When temperatures drop below 32°F (0°C) or exceed 113°F (45°C), it is recommended to disconnect the power,remove the pump from the water, empty the fountain, and store it indoors or in a partially shaded area.Improper storage may cause damage to both the fountain and the pump.
12. Keep the fountain away from high temperatures or heat sources.
13. For outdoor use. We strongly advise do not use the pump in hot water above 95°F (35°C), or ambient temperature exceeds 104°F (40°C).
14. Disconnect the power cord from the outlet by holding the plug. Do not lift, carry, or pull the pump by the power cord.
15. If the entire fountain falls into the water accidentally, turn off the circuit breaker immediately.
16. If any leakage occurs around the pump housing, turn off the circuit breaker immediately and have the pump serviced by a registered technician.
17. Do not operate the fountain if the pump has been dropped or has a damaged power cord or plug. Do not replace the power cord.
18. Keep the plug dry. Do not expose the plug to water or steam. Do not use the pump in swim ming pool or marine area.
19. If the plug or the wall receptacle gets wet due to water dripping down the power cord or for any other reason, do not remove the plug from the wall outlet until the circuit breaker is turned off.
20. Do not expose the pump to direct sunlight or to low temperatures for any period of time.
21. Use only a UL-approved extension cord of the correct rating to avoid overheating.
22. Do not use attachments that are not provided by the manufacturer since they may cause an unsafe condition.
23. Do not use the pump for anything other than its intended use.

PARTS

Item no. Nr. N° d'article Articolo No. Artículo No.	Reference Image Referenzbild Image de référence Immagine di riferimento Imagen de referencia	Qty. Menge Qté. Qtà Cant.
1	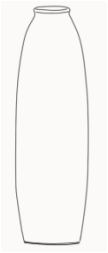 Vase	X1
2	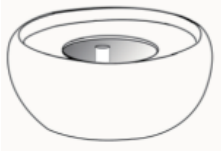 Base	X1
3	 Transformer	X1

Item no. Nr. N° d'article Articolo No. Artículo No.	Reference Image Referenzbild Image de référence Immagine di riferimento Imagen de referencia	Qty. Menge Qté. Qtà Cant.
4	 Pump	X1
5	 Lid	X1
6	 Light	X1

ASSEMBLY

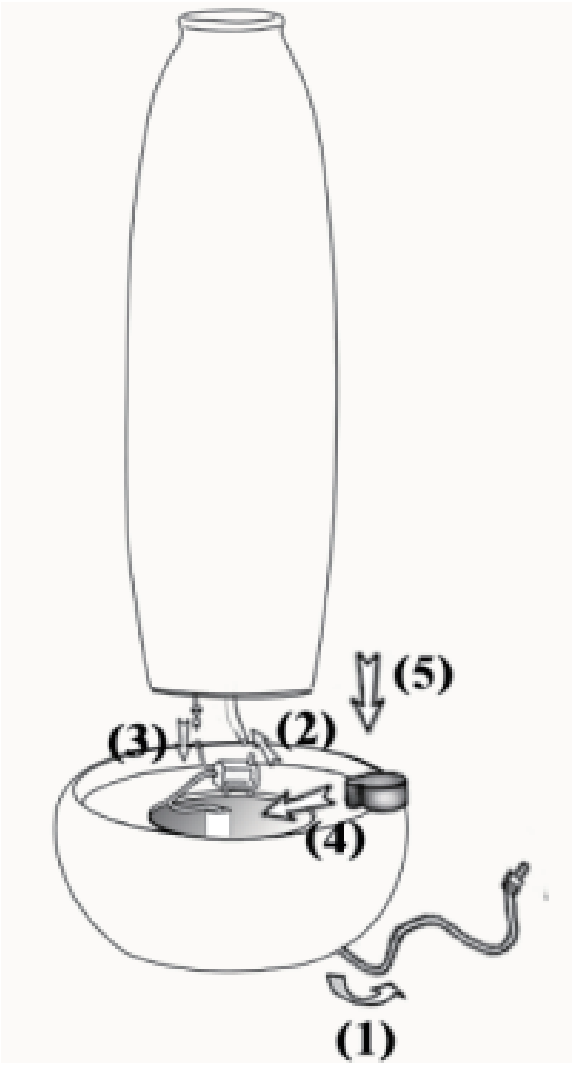

STEP 1: Make the main cord of the pump out from the base bottom through the white pipe.

STEP 2: Connect the flexible tube pre-assembled inside of the vase to the outlet of the pump.

STEP 3: Connect the plug of the light pre-assembled inside of the vase to the branch cord of the pump.

STEP 4: Put the lid onto the white pipe.

STEP 5: Put the vase onto the base.

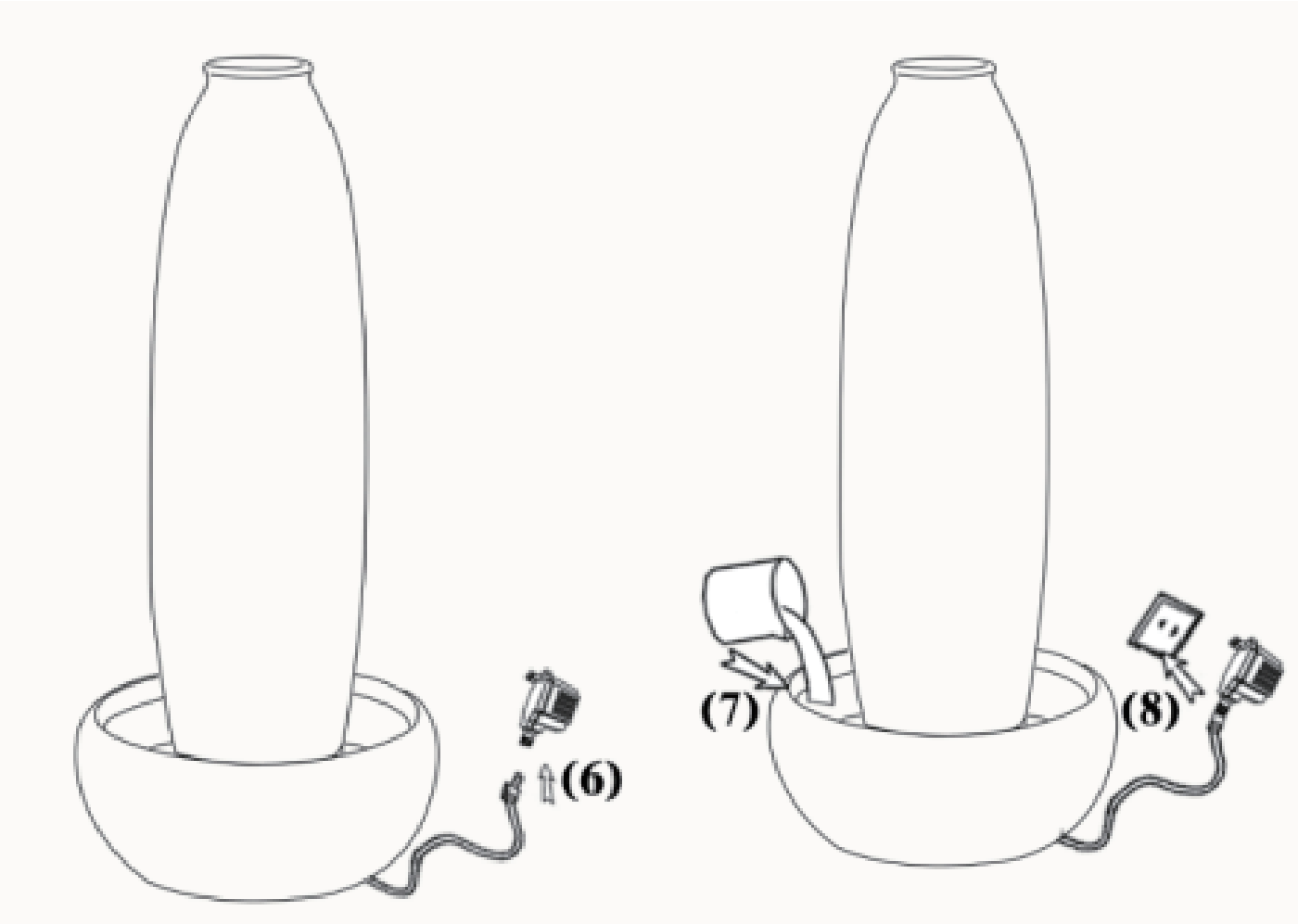

STEP 6: Connect the main cord of the pump to the transformer.

STEP 7: Fill the reservoir with clean water and make sure the water submerges the pump fully to prevent pump damage.

STEP 8: Plug the power cord into an outlet. Water will start to flow after a short while.

PUMP SAFETY & TROUBLESHOOTING

Note: Minor structure difference would exist in each pump.

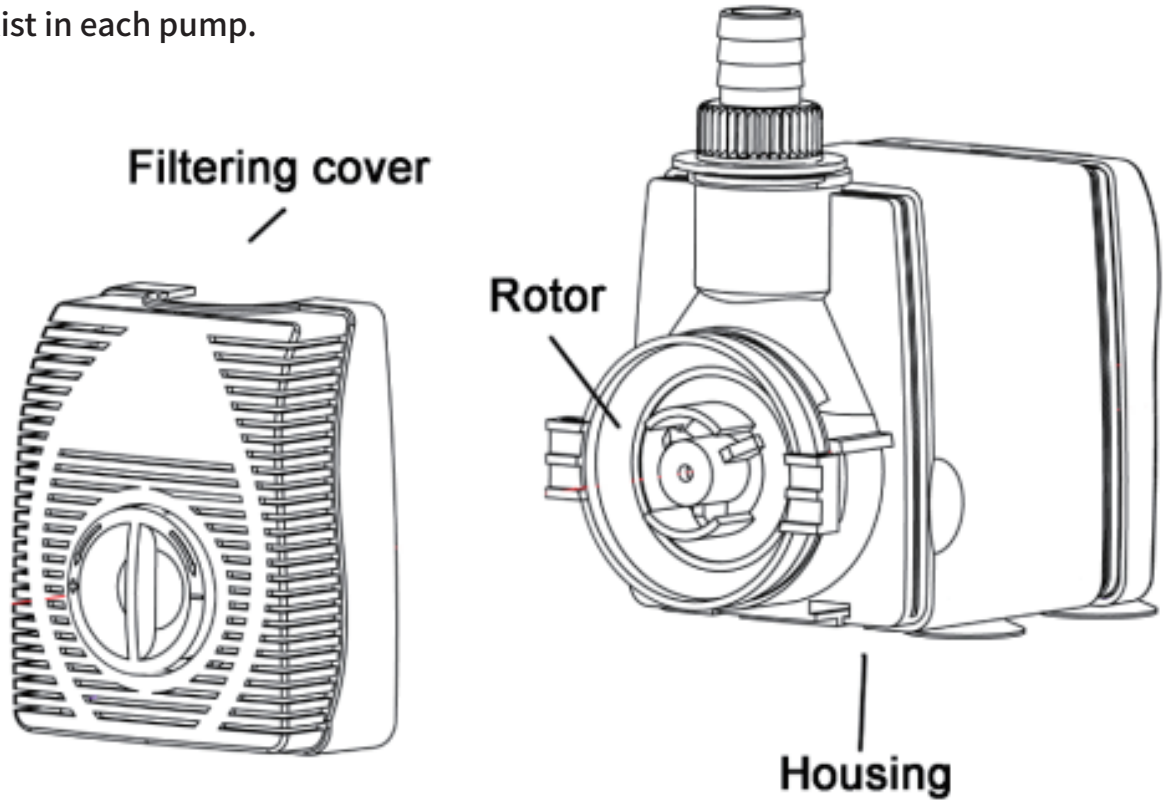

CARE AND MAINTANCE

1. Check regularly that the water reservoir has sufficient water to cover the pump at all times. It will be necessary to check more frequently in warm or windy weather.
2. Do not allow the pump to freeze. During cold spells, remove the pump from the water feature and store it indoor.
3.Periodically it will be necessary to change the water and clean the water feature and reservoir. The frequency of this will depend on the weather and location of the water feature. The outside of the water feature can be cleaned using a soft cloth and clean water and the reservoir with a soft brush. A mild detergent can be used, but please note this will cause the water to foam and should be avoided unless strictly necessary.
4.The pump rotor and housing will require cleaning at approximately monthly intervals. A good indication will be if the water flow rate drops. Unplug the water feature, remove the pump from the water reservoir and disconnect the water pipe. Remove the filtering cover from the front of pump body. Clean the rotor and housing in clean water using cotton buds. Reassemble the pump, reconnect the water pipe and reassemble the water feature.

TROUBLE SHOOTING

1.If the pump fails to run:

POSSIBLE CAUSE	CORRECTIVE ACTION
a) Pump is not covered with water.	Add more water to the reservoir.
b) Pump or fountain is blocked.	Disconnect fountain from power source, remove any obstruction, and clean bowl and tubing.
c) Pump is not secured correctly.	Disconnect fountain from power source, pour out any remaining water, and ensure the tubing in the reservoir is tightly secured to the pump outlet.
d) Pump is not electrically connected.	Check to make sure pump is plugged in and the outlet is working.
e) Pump may be "air locked."	Plug and unplug the pump several times to clear any air that may have been trapped.

2.If the pump "spews" or "burp":

POSSIBLE CAUSE	CORRECTIVE ACTION
There is not enough water in the basin to operate your fountain.	Check the water level to make sure the pump is completely submerged, add enough water to reservoir.

3.If abnormal loud noise is heard during operation:

CORRECTIVE ACTION
a) Disconnect the power supply and then remove the pump front cover and impeller cover.
b) Use hand to grip the impeller, gently pull the impeller/rotor assembly out of the pump housing.
c) Rinse the impeller/rotor assembly and the cavity with clean water. If breakage or surface damage is found in the assembly contact your local retailer or our customer service for a part replacement.

HELP CENTER

Inquiry

Assembly issue

Missing parts

If you encounter any difficulties during assembly, please contact us.
Wenn Sie während der Montage auf Schwierigkeiten stoßen, kontaktieren Sie uns bitte.
Si vous rencontrez des difficultés lors du montage, veuillez nous contacter.
Se incontri difficoltà durante il montaggio, ti preghiamo di contattarci.
Si encuentras alguna dificultad durante el ensamblaje, por favor contáctanos.

DISCLAIMER

Manufacturer and seller expressly disclaim any and all liability for personal injury, property damage or loss, whether direct, indirect, or incidental, resulting from the incorrect attach ment, improper use, inadequate maintenance, unapproved modification, or neglect of this product.
Der Hersteller und Verkäufer lehnen ausdrücklich jegliche Haftung für Personenschäden, Sach schäden oder Verluste ab, egal ob direkt, indirekt oder zufällig, die durch falsche Anbringung, unsachgemäßen Gebrauch, unzureichende Wartung, nicht genehmigte Änderungen oder Vernachlässigung dieses Produkts entstehen.
El fabricante y vendedor renuncian expresamente a toda responsabilidad por lesiones perso nales, daños materiales o pérdidas, ya sean directos, indirectos o incidentales, derivados de la incorrecta colocación, uso inadecuado, mantenimiento insuficiente, modificación no aprobada o negligencia de este producto.
Il produttore e il venditore declinano espressamente ogni responsabilità per lesioni personali, danni materiali o perdite, dirette, indirette o incidentali, derivanti dall'errato fissaggio, uso improprio, manutenzione inadeguata, modifica non autorizzata o negligenza di questo prodotto.
Le fabricant et le vendeur déclinent expressément toute responsabilité en cas de blessures corporelles, de dommages matériels ou de pertes, qu'ils soient directs, indirects ou accessoires, résultant de la fixation incorrecte, de l'utilisation inappropriée, de l'entretien insuffisant, de la modification non approuvée ou de la négligence de ce produit.