FENCE INSTALLATION INSTRUCTIONS

PARTS

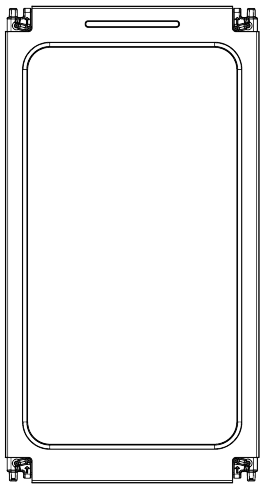

1 Door

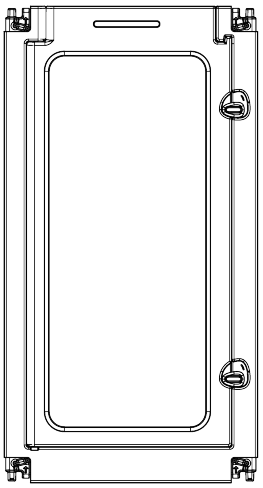

9 Fence Panels

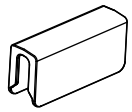

6 Straight joints

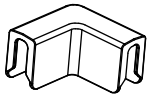

4 L joints

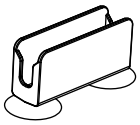

6 Straight suction cup joint.

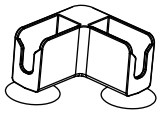

4 L suction cup joint.

INSTALL

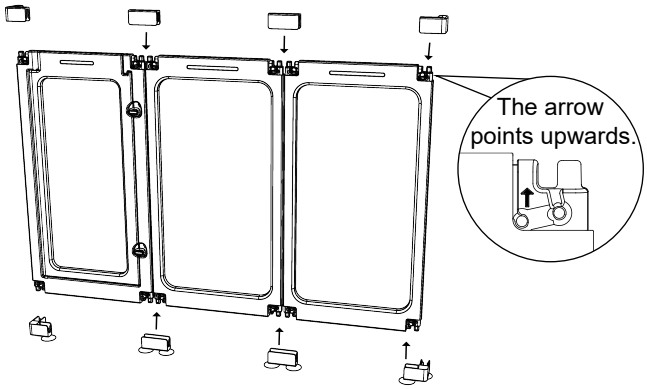

1. Place one gate panel and two single fence panels according to the positions shown in the diagram, and connect and tighten them with L joints, straight joints and T joints

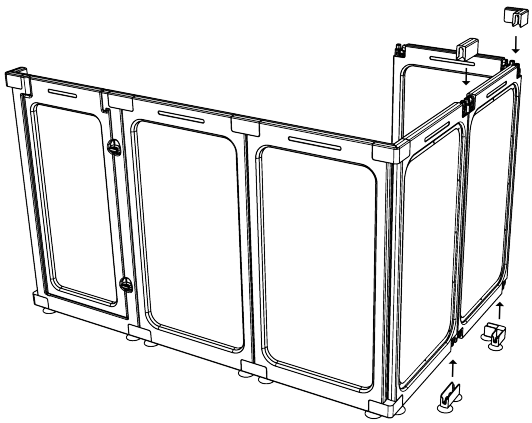

2. Then place Fence Panels fence panels according to the positions shown in the diagram and fix and press them tightly with L joints and straight joints.

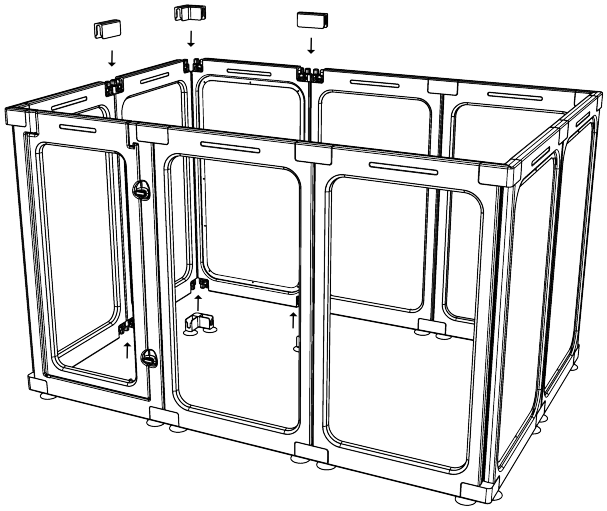

3. Fix and clamp tightly with straight joints and L joints according to the positions shown in the diagram and connect and clamp with the main body of the fence.