Owner Manual

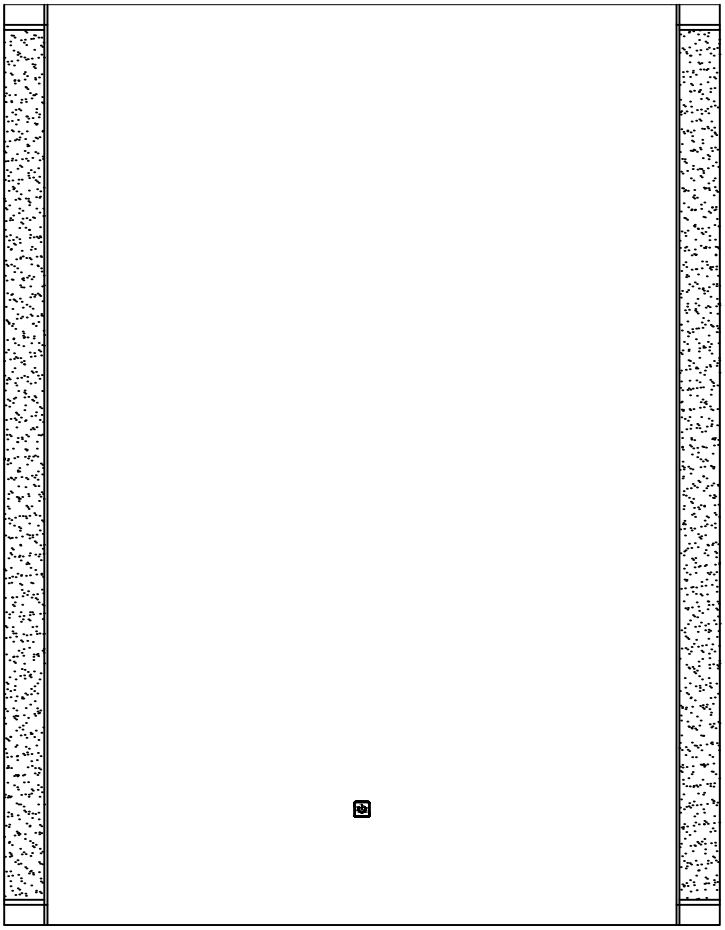

Thank you very much for choosing our led lighted mirror. For your safety, it is very important that the following instructions are read carefully and completely before beginning the assembly and installation of this lighting fixture:

WARNING -TO REDUCE THE RISK OF BURNS, FIRE, ELECTRICAL SHOCK OR INJURY TO PERSONS:

1. It is strongly recommended that two or more adults install this led lighted mirror.
2. Disconnect power at the circuit breaker before putting on or taking off parts. To disconnect, turn all controls to the off position, then disconnect power from the AC/DC adaptor.
3. Use only power adaptor that was provided with this product. Using a different power adaptor will damage the lights and may cause fire, electrical shock hazard.
4. Always wear suitable eye protection before drilling.
5. Keep the voltages between 110V and 120V. If the voltage exceeds 120v, please use the transformer.
6. Use this furnishing only for its intended use as described in these instructions.Do not use attachments/accessories not recommended by the manufacturer.
7. Never operate this furnishing if it is not working properly or if it has been dropped or damaged, or dropped into water.
8. FOR HOUSEHOLD AND INDOOR USE ONLY. Do not use outdoors.
9. Do not operate where aerosol (spray) products are being used or where oxygen is being administered.
10. The appliance is not to be used by persons (including children) with reduced physical, sensory or mental capabilities, or lack of experience and knowledge, unless they have been given supervision or instruction. Children should be supervised to ensure that they do not play with the appliance.

⚠ CAUTION:

1. Risk of Electrical Shock – Connect this Furniture to a properly grounded outlet only.
2. Grounding Instructions: This product must be connected to a grounded metal, permanent wiring system, or an equipment-grounding conductor that must be run with the circuit conductors and connected to the equipment-grounding terminal or lead on the product.

PRE-ASSEMBLY ATTENTIONS:

1. After opening the package, please inspect the product immediately for any damage during transit or missing parts.
2. Remove all parts and hardware from the box along with any plastic protective packaging.
3. Do not discard any contents until after installation is complete to avoid accidentally discarding small parts or hardware.
4. Before drilling, please ensure there are no hidden electrical cables or pipes (water, gas, or electrical) behind hanging points.

What's in the box

No.	Description	Draw	QTY.(pcs)
A	LED Lighted Mirror	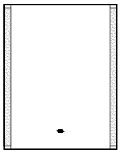	1
B	Phillips Flat Head wood Screws		2
C	Wall Anchors	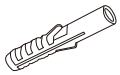	2
D	Holes Positioning Sketch		1

TOOLS NEEDED(not included)

Electric Drill

Working Gloves

Tape Measure

Marker

Phillips-head screwdriver

Hammer

Safety Goggles

Level Ruler

Secure it! Wall Anchoring Guide

This mirror must be securely attached to the wall. The hardware used to secure your mirror to the wall depends on your wall material. If your wall material is not listed or if you have any questions, consult with a local hardware retailer.

This manual provides installation instructions for Masonry (concrete or brick Mortar) and drywall or plaster as an example.

WALL MATERIAL
Masonry (concrete or brick Mortar)

ANCHORING DEVICE
Plug with screw.
(Screw & Anchor C)

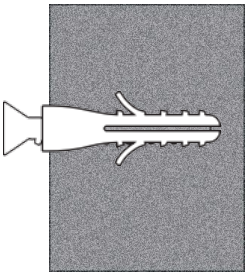

WALL MATERIAL
Drywall or plaster with available wood stud

ANCHORING DEVICE
Screw inserted directly into stud or plug with screw.
(Screw & Anchor C)

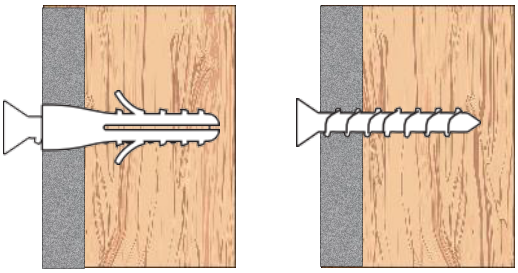

Safety First! Wire Connection Guide

Junction box

- Grounding Instructions: This product must be connected to a grounded metal permanent wiring system or an equipment-grounding conductor must be run with the circuit conductors and connected to the equipment grounding terminal or lead on the product.

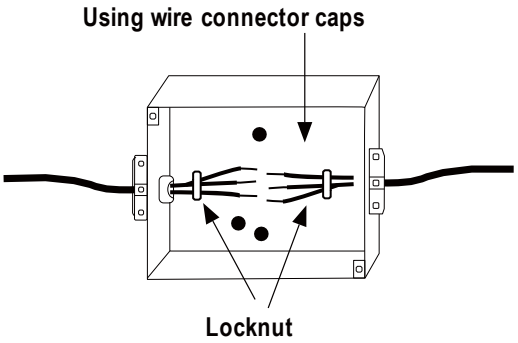

★ junction box is not included ★

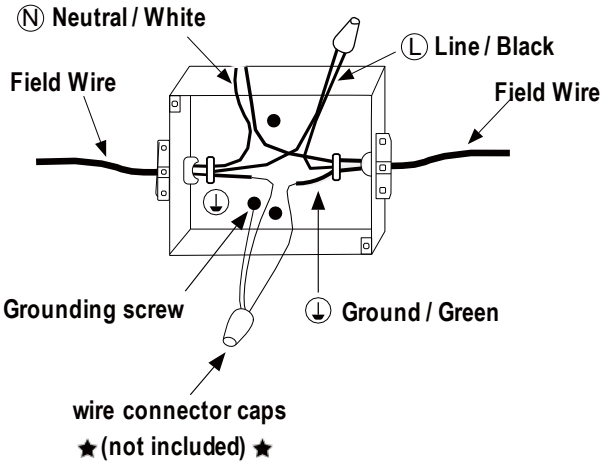

EASY TO INSTALL

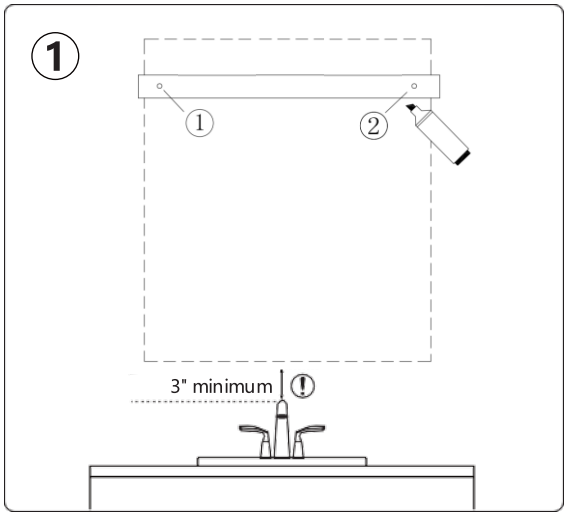

• Attach the "holes-positioning" masking tape to the wall using a level to ensure the mirror will be perfectly leveled.

• Gently puncture the holes location on the "hole-positioning" tape using a sharp tool or a pencil marking the points on the wall.

(Remove the masking tape before drilling.)

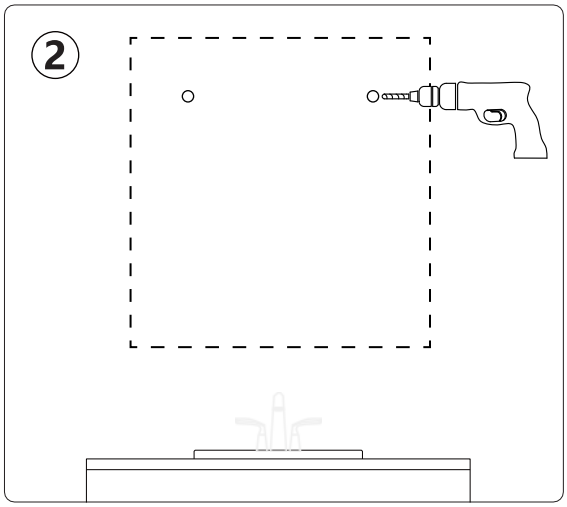

• Drill holes in the wall.
(drill bit in 8mm (5/16") ,drilling depth in 50mm (1-15/16"))

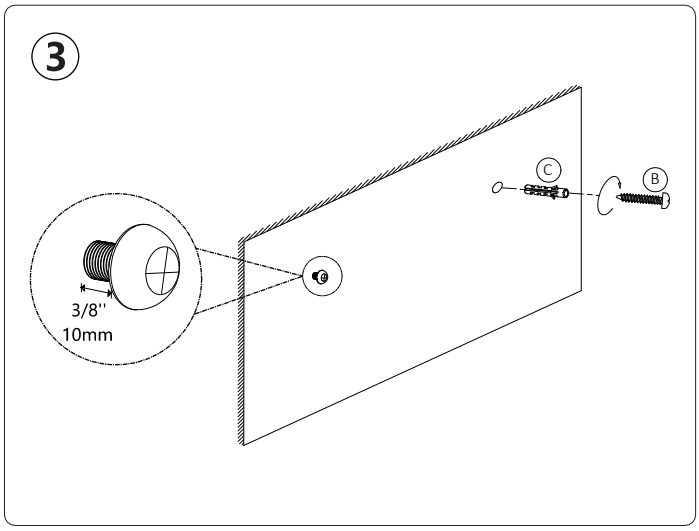

• Insert the anchor (C) into the pre-drilled holes, then screw (B) into the wall, you need to make sure that 3/8" of (C) is outside the wall to hang the mirror.

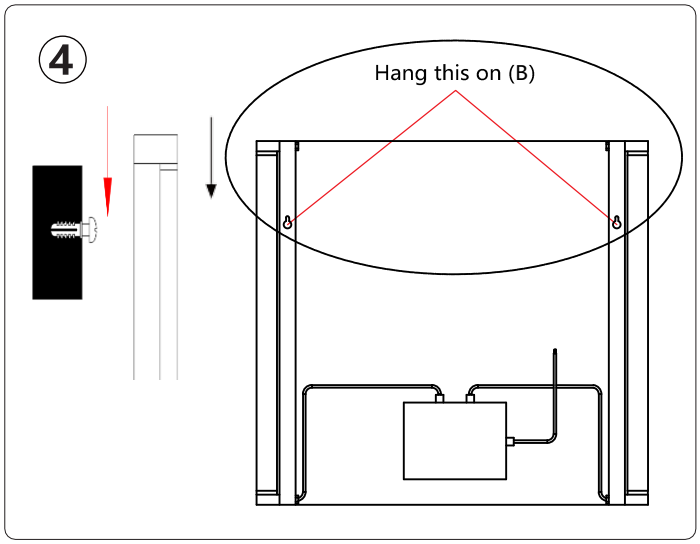

- Connect the power supply.
  (ref. to page 4)
- 2 adults needed to hang the mirror.

  This is highly recommended for safety to prevent any accidents or damaging the product

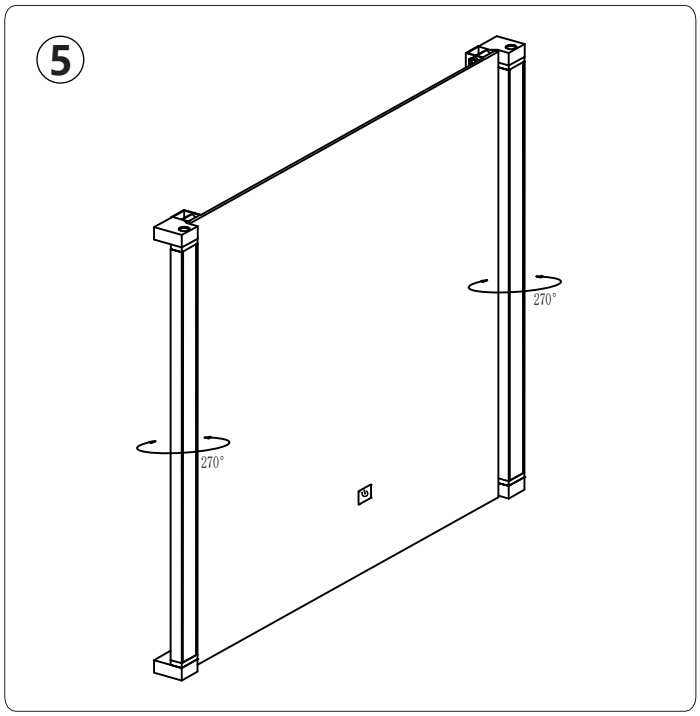

- Adjust the tube with integrated LED to position the light as desired. Please see the diagrams for the full range of positions available.

Operating Manual

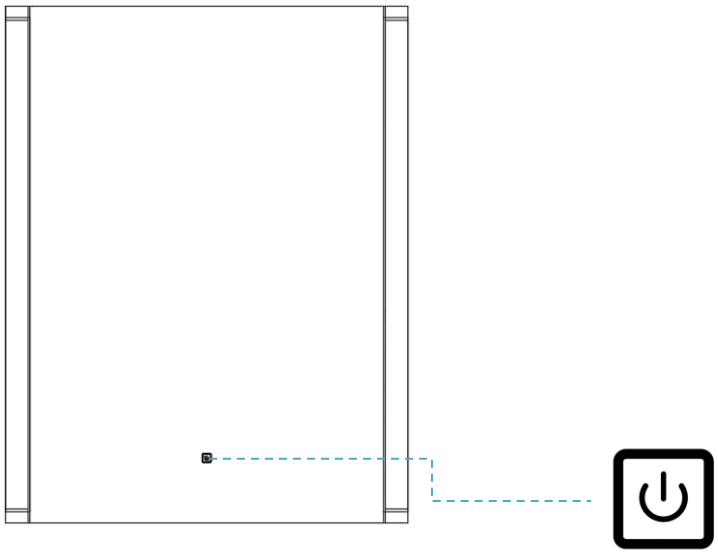

The button will turn white when connected to the main power supply.

1. **Short press to turn on the light and change the color temperature : Warm→ Warm white→ White → turn off .**
   While the lighting is on, after waiting for 15 seconds, short press the button to turn off the lighting directly.
2. **When the lighting is turned on, long press the button to adjust the brightness, long press again to reverse the brightness adjustment.**

- **Long press the button to close or open the blue backlight of button.**
- **Optional to be wired to wall switch by ON/OFF memory function.**

Dimension	Size (mm)	Input Power	Input Current	Defog Size (mm)	No. of Screws & Wall Anchors for Bracket (Set)
24*32*2.38in	610*810*60mm	17W	1A	none	2
32*24*2.38in	813*610*60mm	20W	1A	none	2
28*36*2.38in	711*914*60mm	22W	1A	none	2
30*36*2.38in	762*914*60mm	22W	1A	none	2

OTHER SPECIFICATION:

PARAMETER	SPECIFICATION
Stepless Dimming	10%-100%
Color Temperature	3CCT 3000K-4000K-6000K
LED Life Span	50,000 hours
CRI	90
Anti-fog	none
Memory Function	yes
Tempered Glass	none
Lighting Lens Material	Aluminum & Glass & PC
Input Voltage	120V AC
Output Voltage	12V DC
Working Temperature	-20 ~ +50°C
Wiring Method	Hardwired
Switch	Touch Sensor

WARRANTY:

If under normal use and for the full time period, your product fails to operate, please contact us. We will be glad to solve the problem for you!

CARE & CLEANING:

1. Use a household liquid glass cleaner to keep the mirror surface clean.
2. Do not use abrasive cleaners containing ammonia.