# ASSEMBLY INSTRUCTION

## 2 DRAWER BEDSIDE

**2 PERSON ASSEMBLY**

**Please check all fittings & panels are in the box prior to assembly**

# Safety and Care Advice

## IMPORTANT - Please Read This Instruction Carefully Before Assembly.

- Check you have all the components and tools listed on page 3.
- Remove all settings from the plastic bags and separate them into their groups.
- Keep children and animals away from the work area, small parts could choke if swallowed.
- Make sure you have enough space to layout the parts before assembly.
- Do not stand or put weight on the product, this could cause damage.
- Assemble the item as close to it's intended position(in the same room) as possible.
- Assemble on a soft level surface to avoid damaging the unit.
- Parts of the assembly will be easier with 2 people.

- Do not use power drill/drivers for assembly, or the unit may be damaged.
- Dispose of all packaging carefully and responsibly.

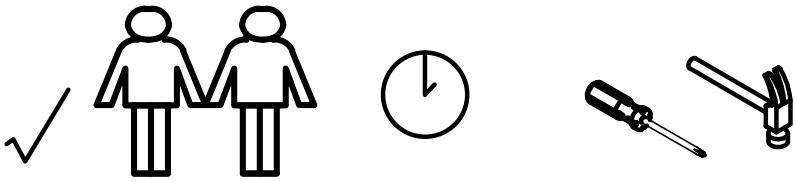

## CARE and MAINTENANCE

- Only clean using a damp cloth and mild detergent, do not use bleach or abrasive cleaners.
- From time to time check that there are no loose screws on this unit.
- This product should not be discarded with household waste. Take to your local authority waste disposal center.

## General Hints & Tips

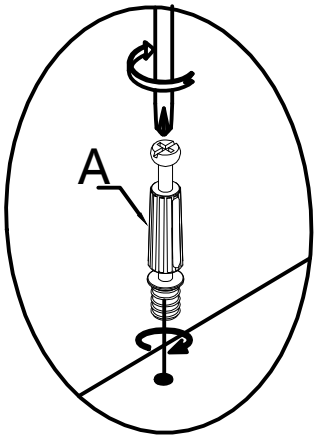


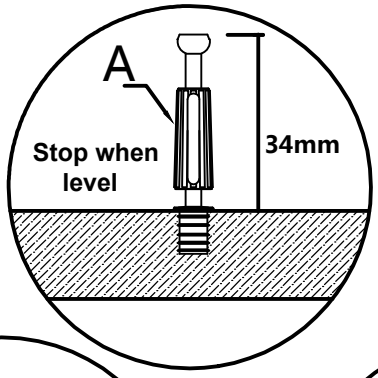


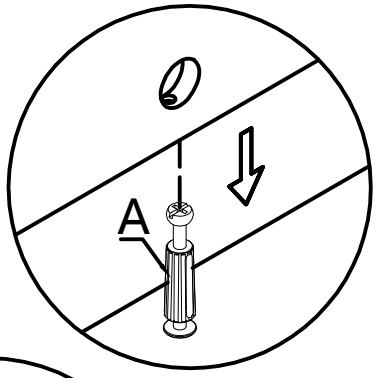


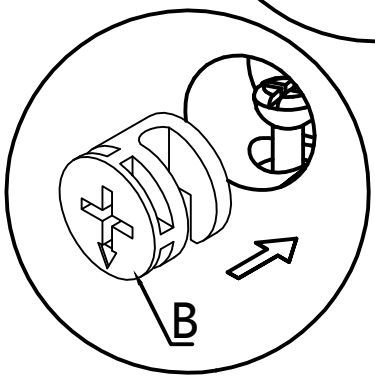


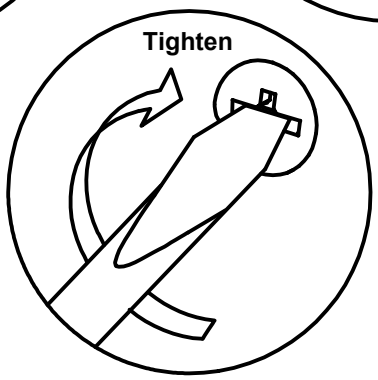

# Components and Tools

**IMPORTANT - Please Check If You Have All The Components and Tools.**

**Note: The quantities below are the correct amount to complete the assembly. In some cases more pieces may be supplied than are required.**

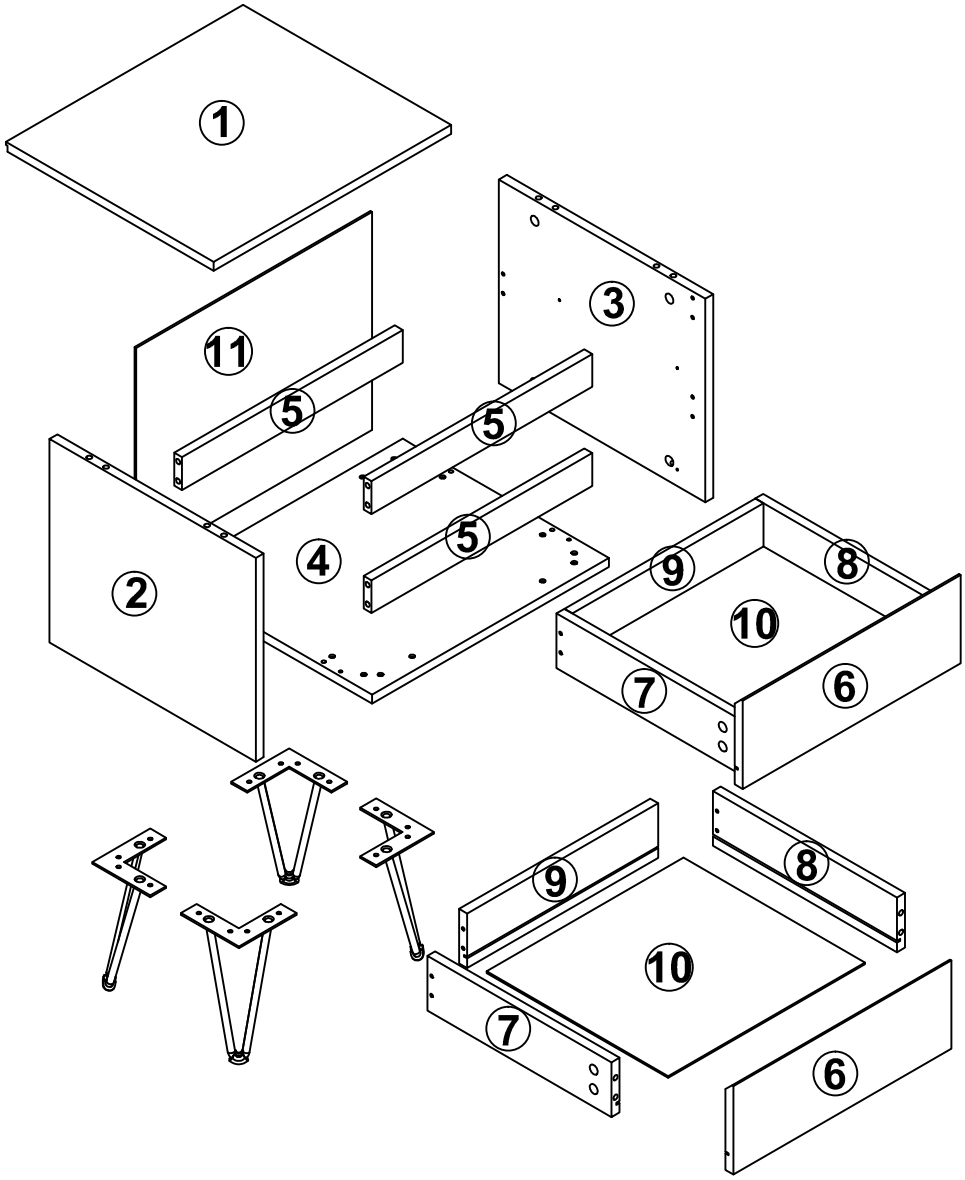


| | | | | | |
|---|---|---|---|---|---|
| A=28 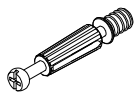 Peg M6*34mm | B=28 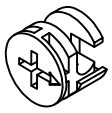 Lock M15*12mm | C=8 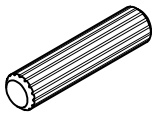 Dowel M6*30mm | D=16 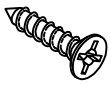 Screw M3.5*14mm | E=8 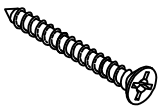 Screw M4*38 | F=16 Screw Cap |
| G=12 Pin | H=16 Screw | I=4 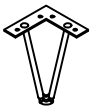 Plastic Feet 150H | J=1 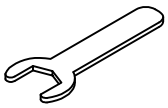 Wrench | CR CL DR DL=2 Drawer Runner 14" | |

# Drawer Runner Instruction

**IMPORTANT - Please Read It Carefully.**

**NOTE:1 PAIR DRAWER RUNNER INCLUDES 4 PIECES.**

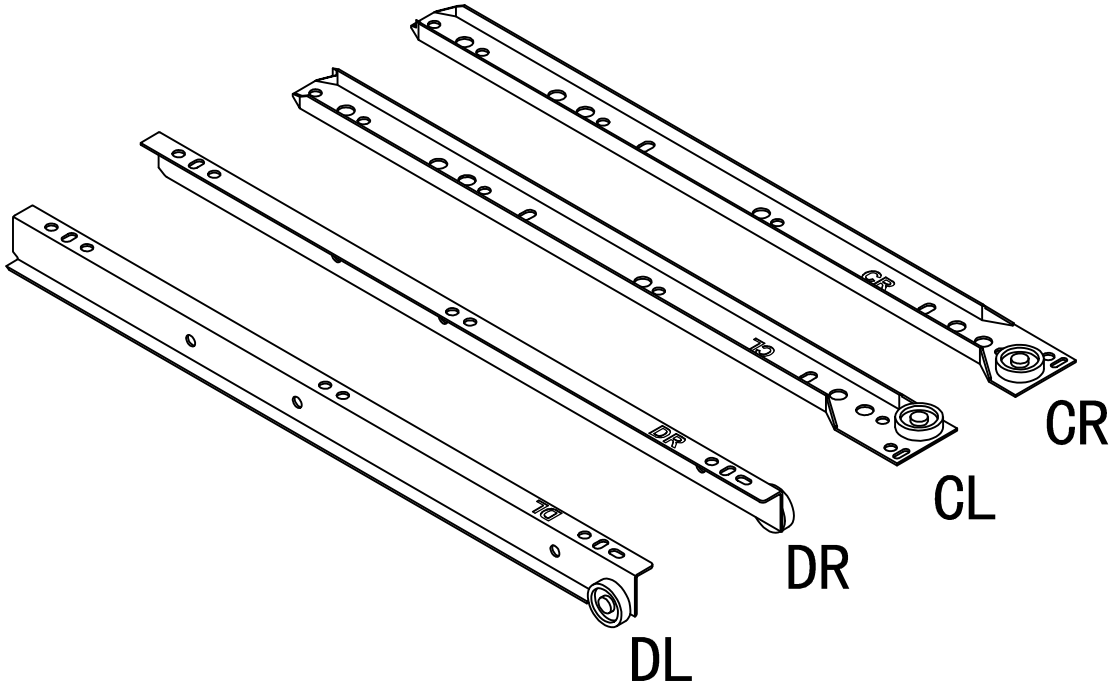


## Fittings (not to scale)

| NO. | DESCRIPTION | QTY | |
|---|---|---|---|
| CR | Outer Drawer Runner - Right | 2PCS | 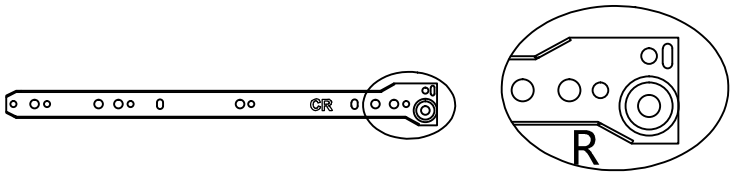  |
| CL | Outer Drawer Runner - Left | 2PCS | 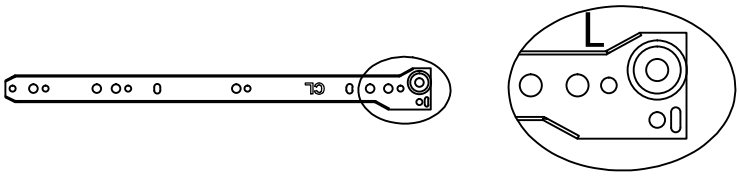  |
| DR | Inner Drawer Runner - Right | 2PCS | |
| DL | Inner Drawer Runner - Left | 2PCS | 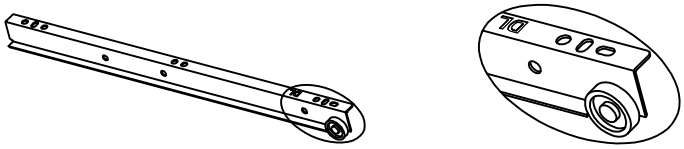 |

# Assembly Instruction

## Step 1

A=16

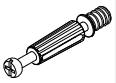

Peg

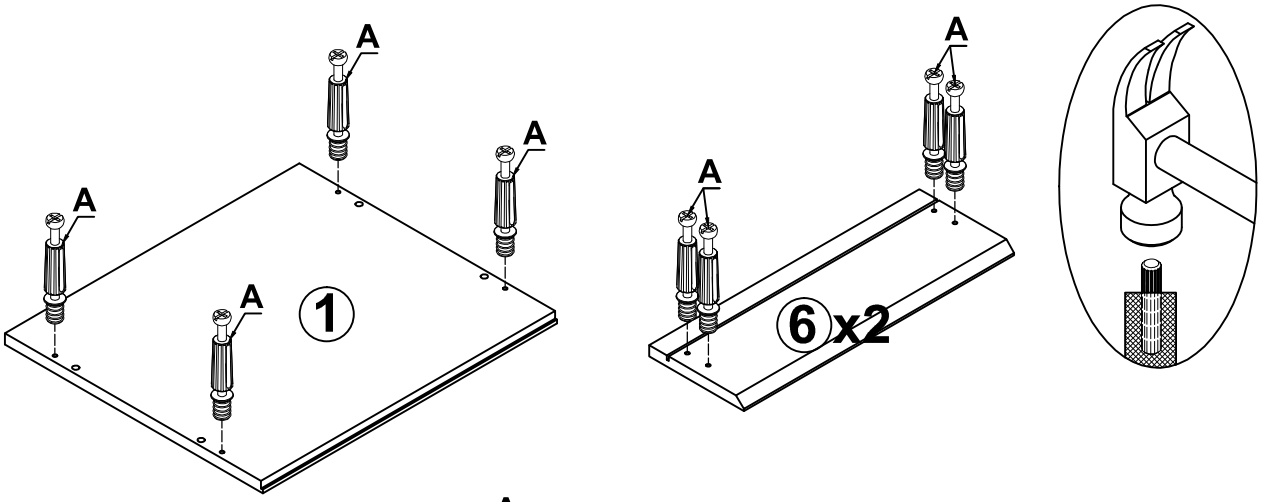


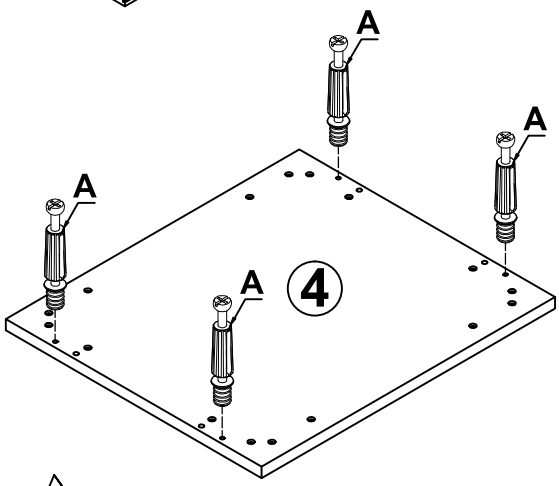


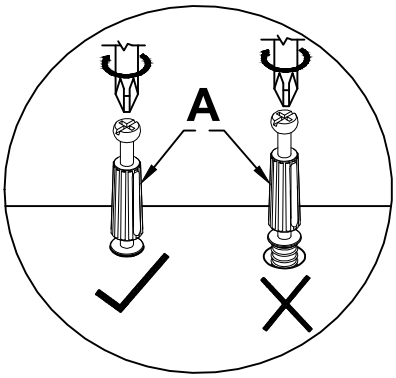


## Step 2

F=16

Screw Cap

H=16

Screw

I=4

Plastic Feet

J=1

Wrench

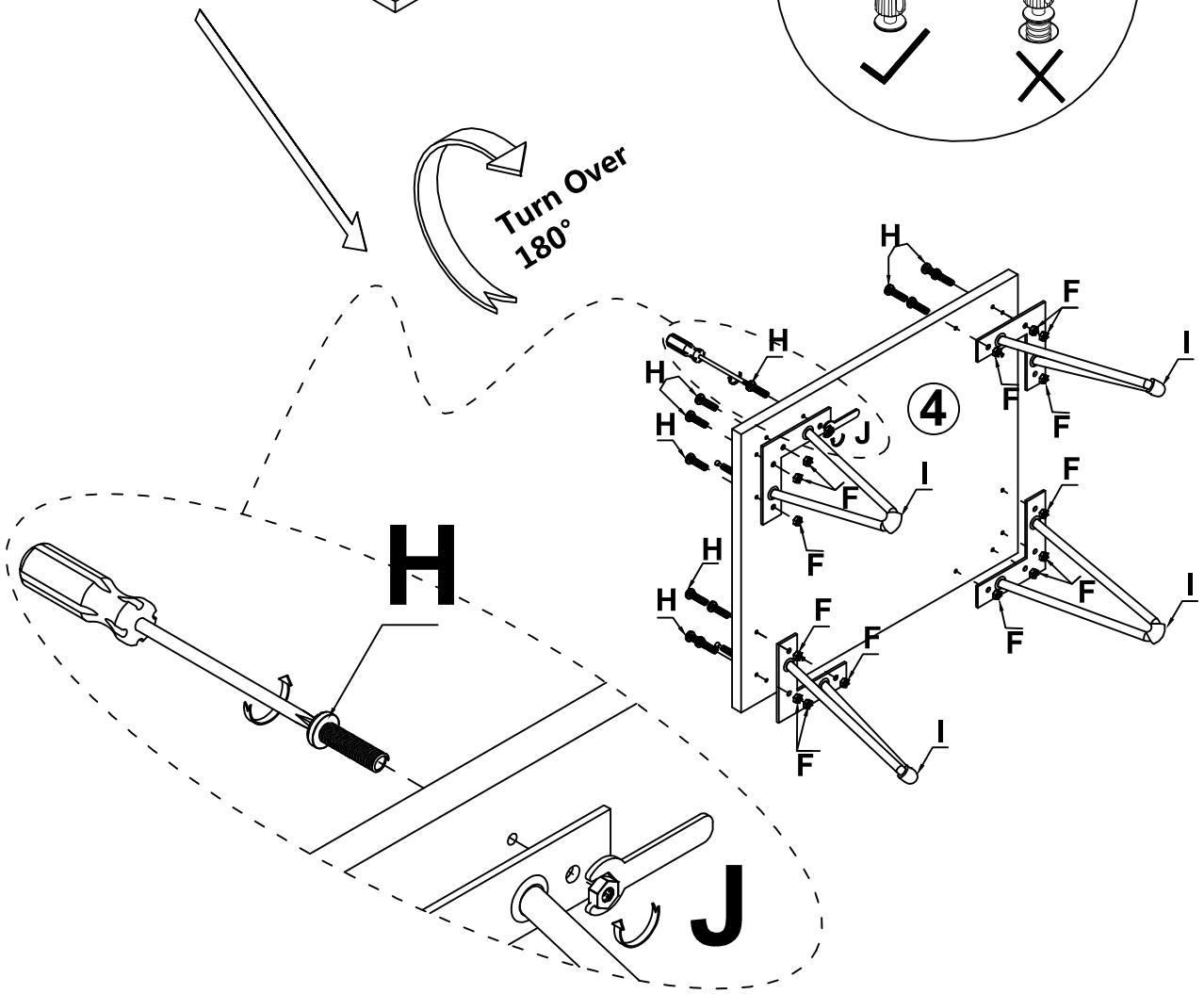

# Assembly Instruction

## Step 3

| A=6 | C=4 |
|---|---|
| 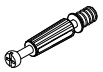 Peg | Dowel |
| CR=1 | D=2 |
| 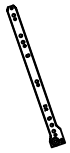 Drawer Runner | Screw M3.5*14mm |

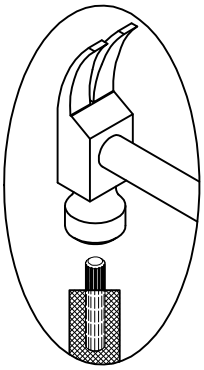

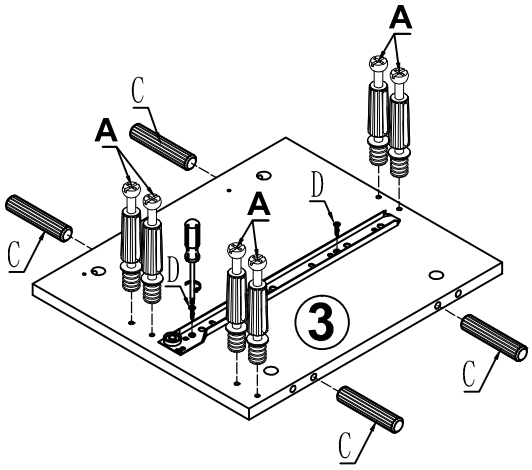


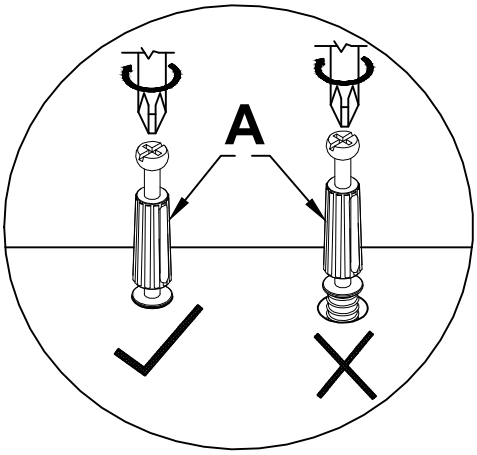


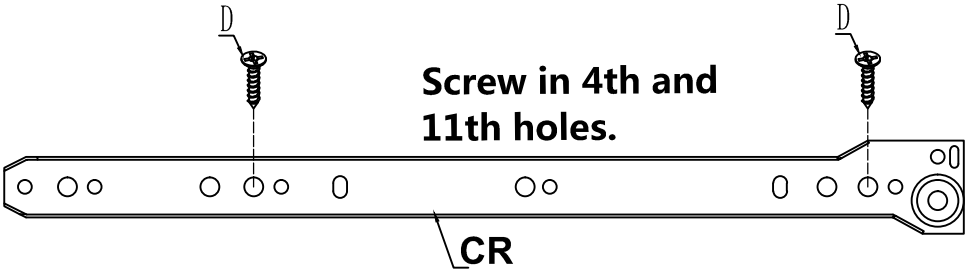


## Step 4

| A=6 | C=4 |
|---|---|
| 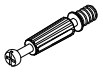 Peg | Dowel |
| CL=1 | D=2 |
| Drawer Runner | Screw M3.5*14mm |

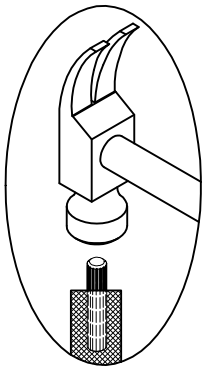

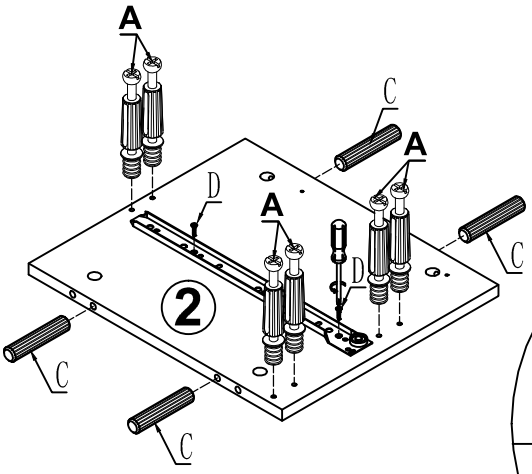


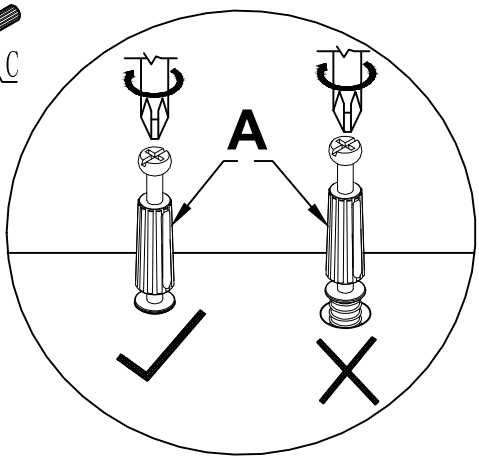


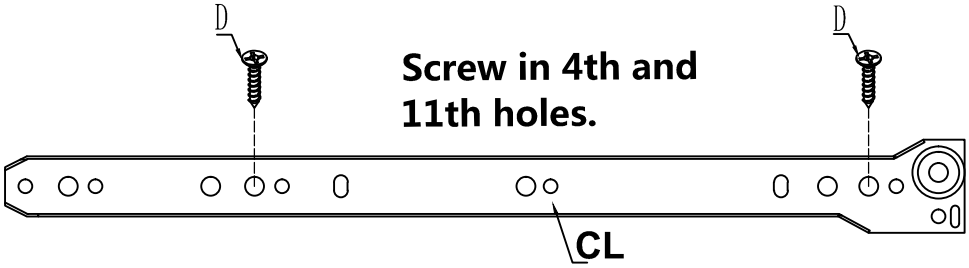

# Assembly Instruction

## Step 5

B=6

Lock

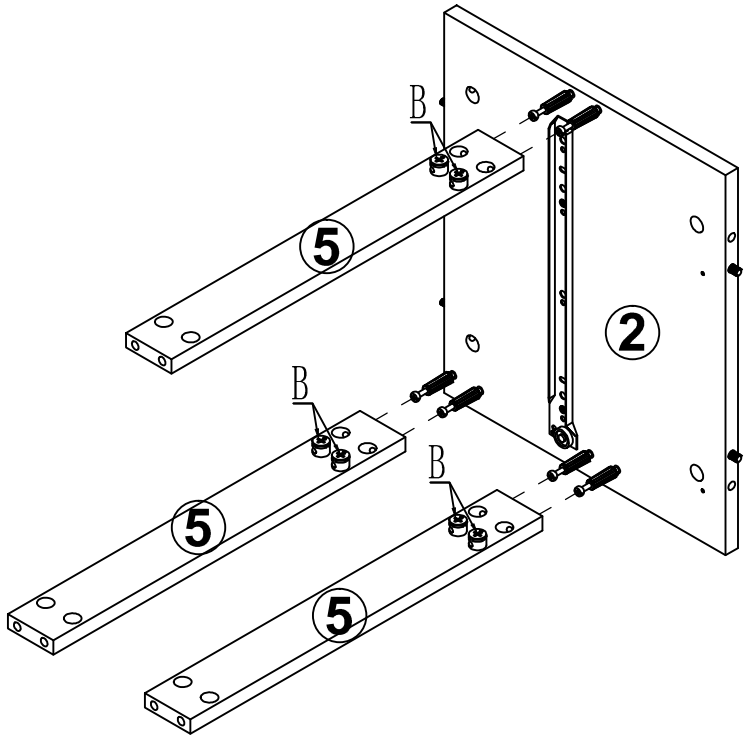


## Step 6

B=6

Lock

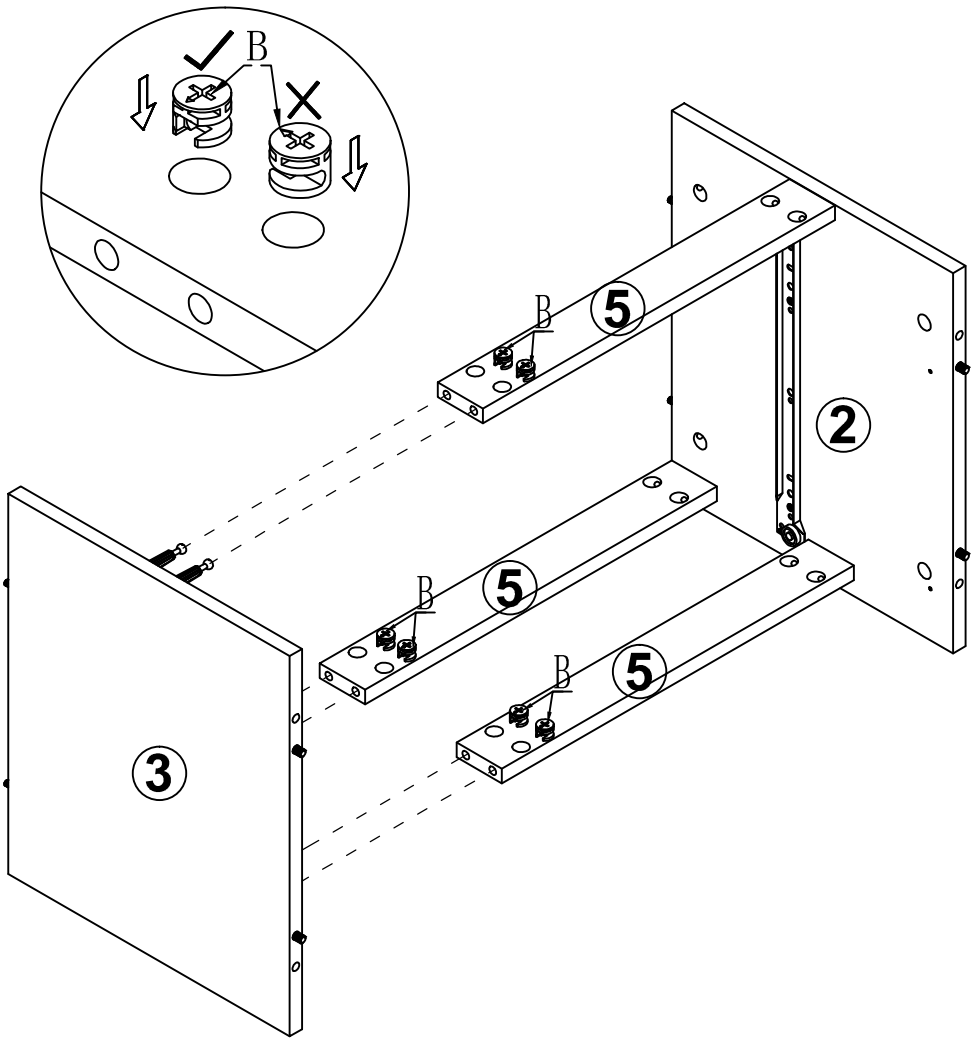

# Assembly Instruction

## Step 7

B=4

Lock

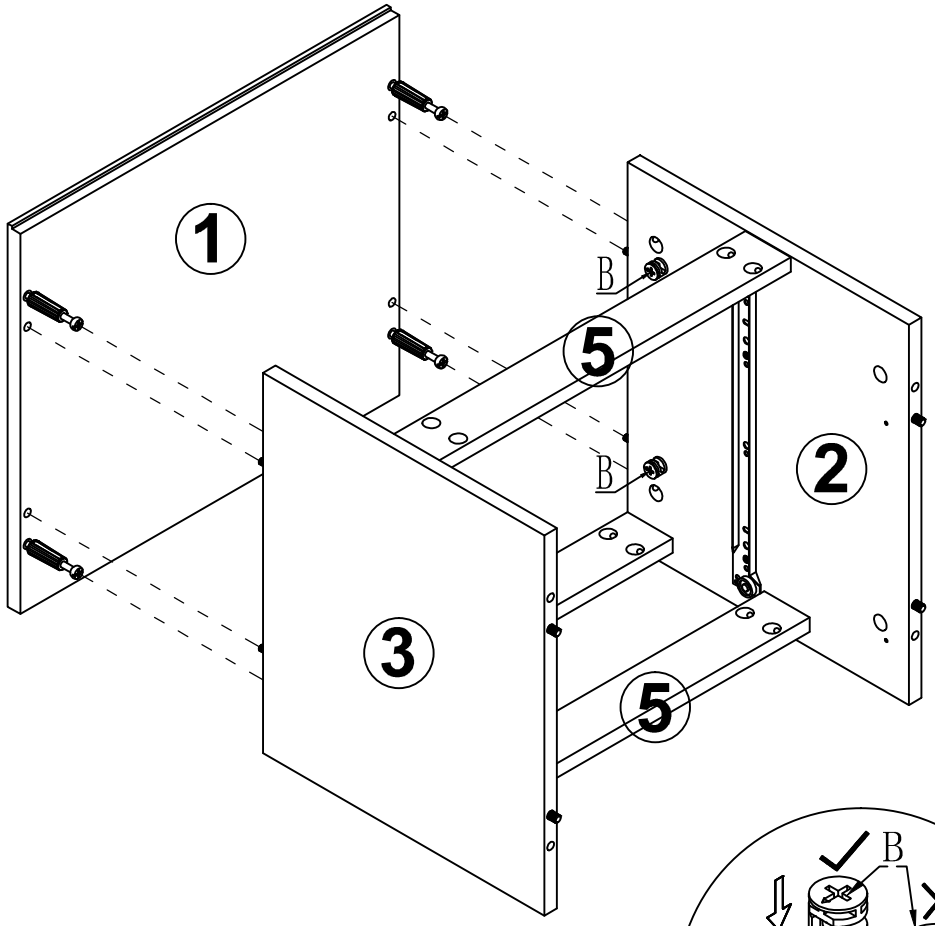


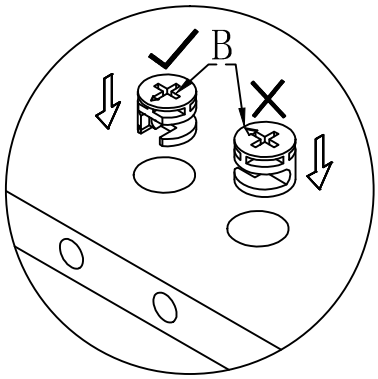


## Step 8

B=4

Lock

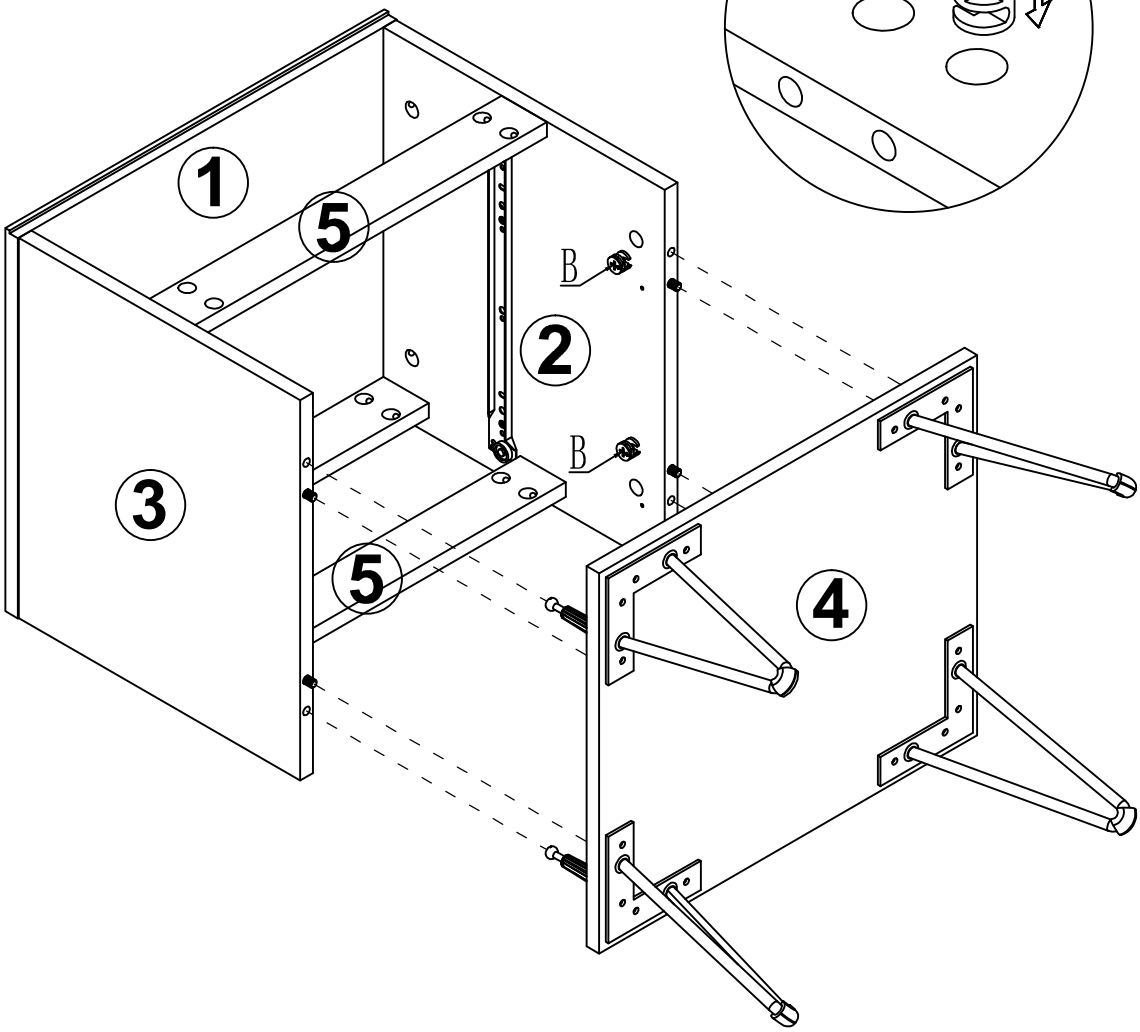

# Assembly Instruction

## Step 9

| CR=1 | CL=1 |
|---|---|
| 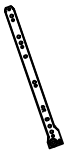 Drawer Runner | 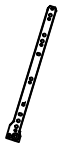 Drawer Runner |
| D=4 Screw M3.5*14mm | |

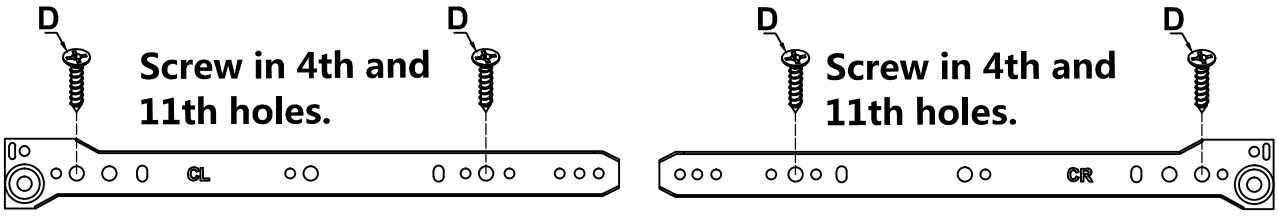


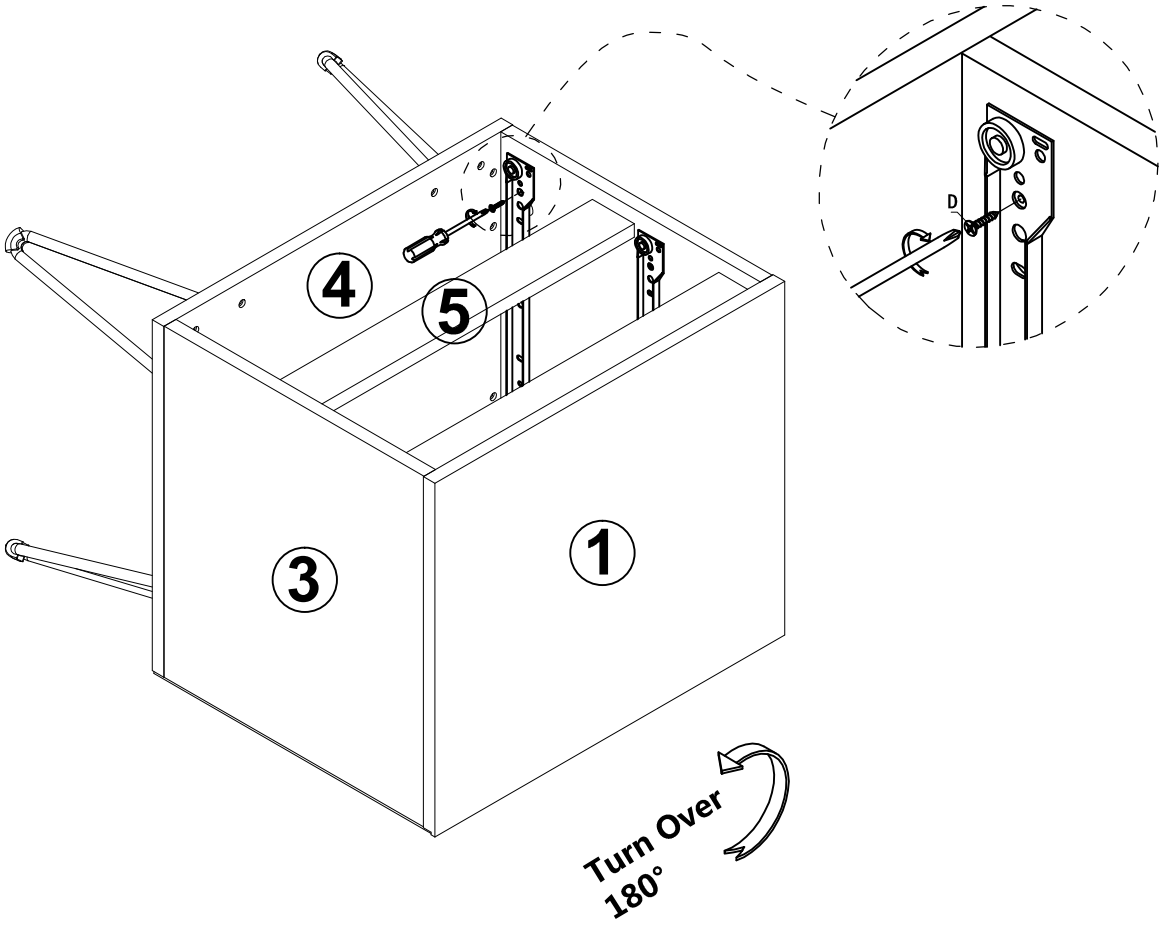


## Step 10

| G=12 | |
|---|---|
| Pin | |
| | |

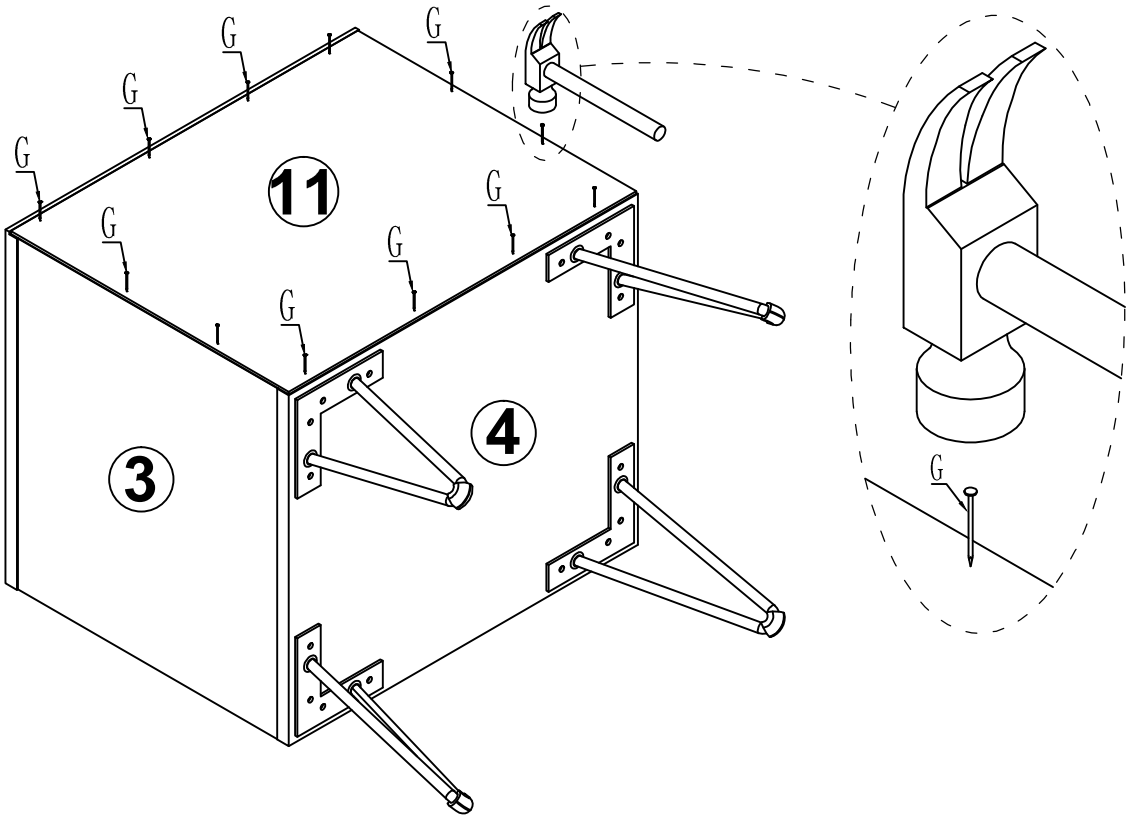

# Assembly Instruction

## Step 11

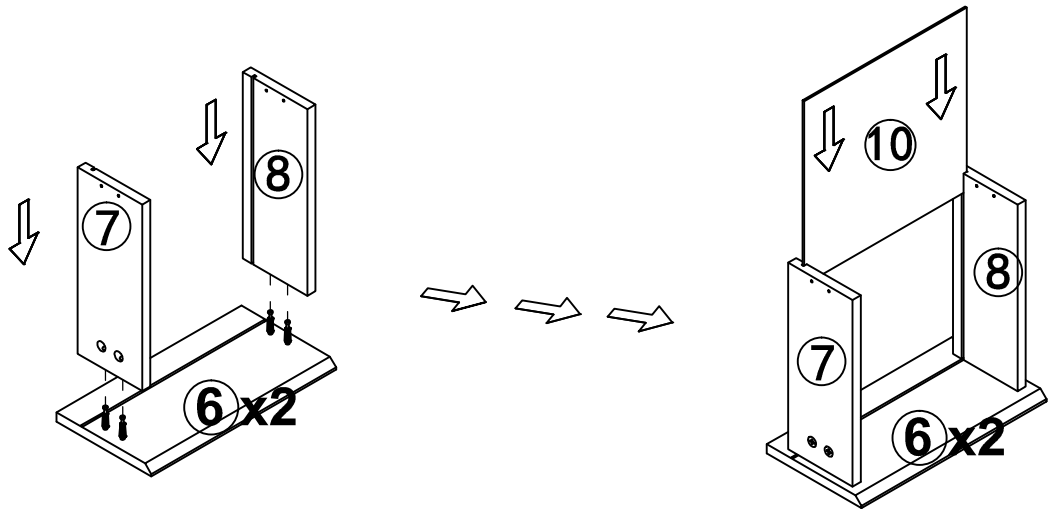


**※Assembly Details**

**Please slide drawer bottom then fix the cam lock**

## Step 12

| | |
|---|---|
| D=8 Screw | DR=2 Drawer Runner |
| DL=2 Drawer Runner | E=8 Screw |
| B=8 Lock | |

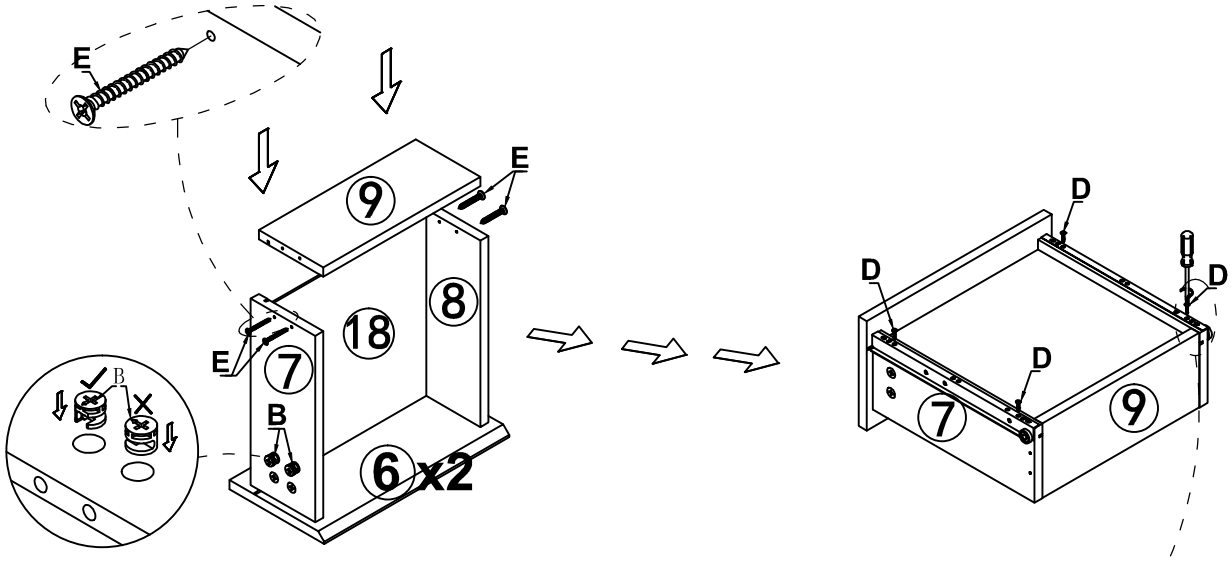


**※Assembly Details**

**Please slide drawer bottom then fix the cam lock**

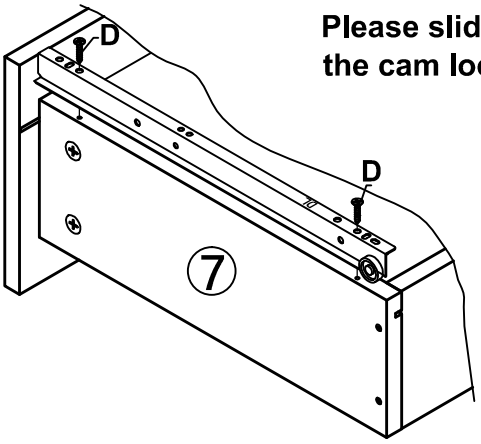


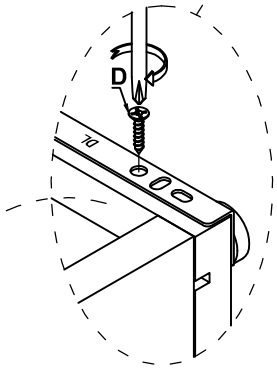

# Assembly Instruction

**Step 13**

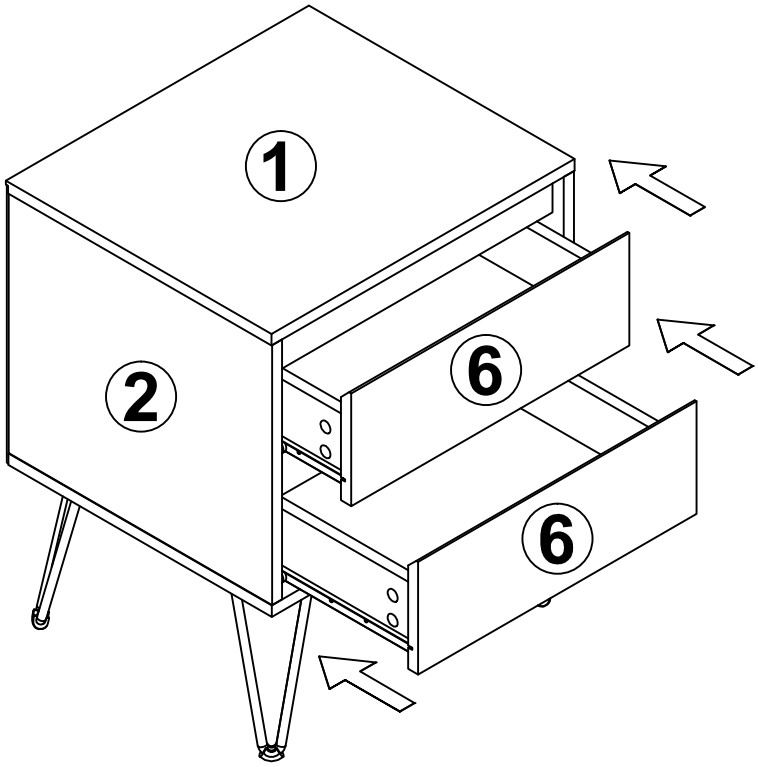


**Step 14**

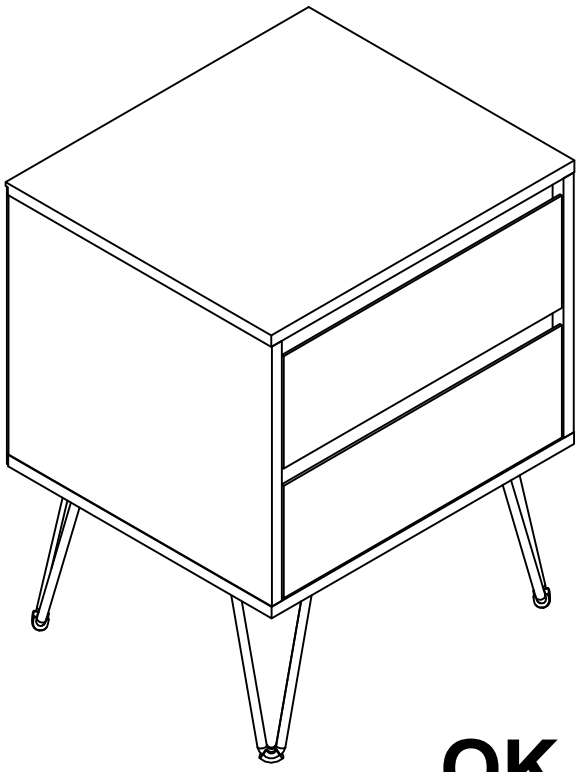

**OK**