ASSEMBLY INSTRUCTIONS

Weight Limits: 250 lbs

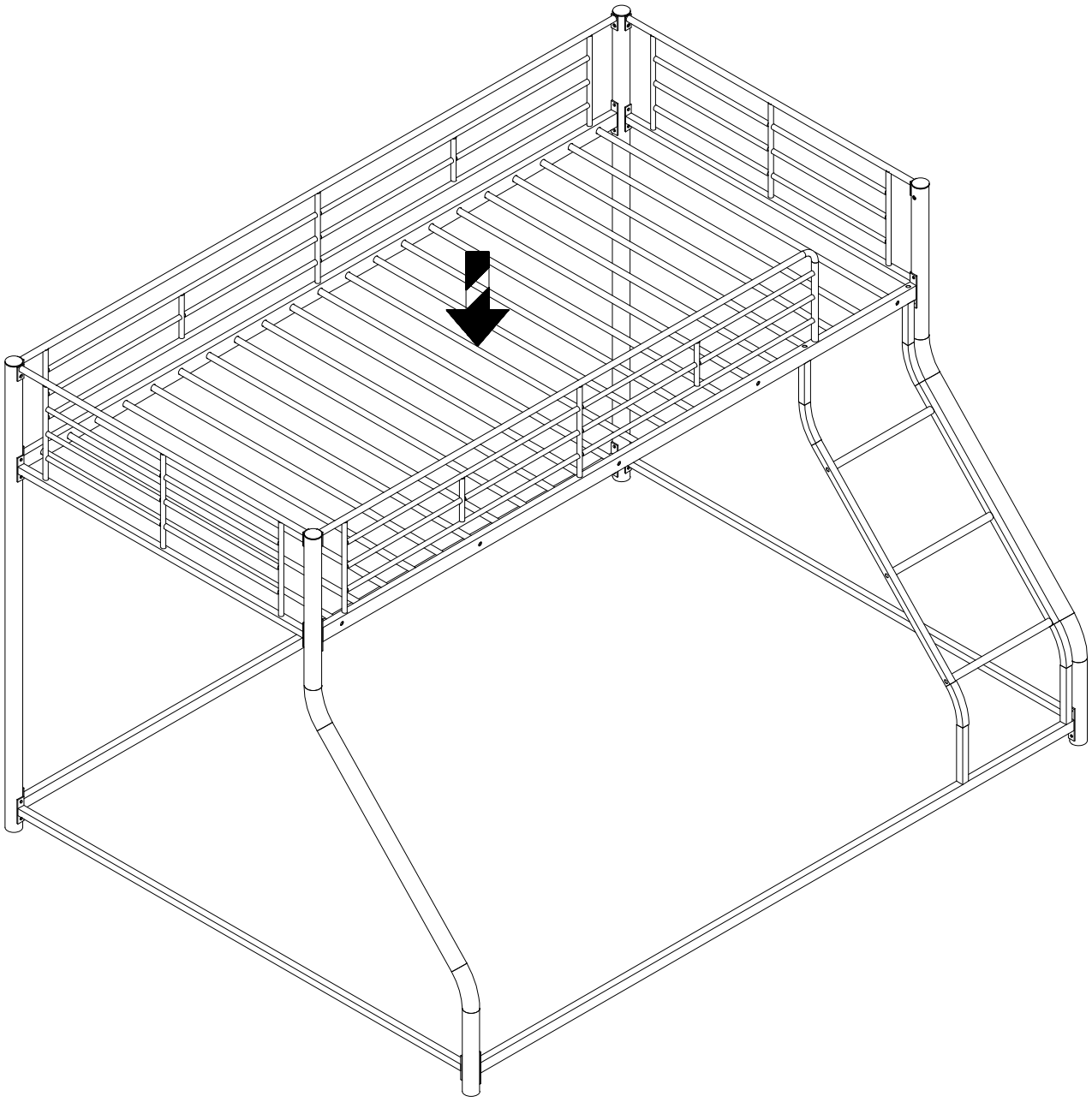

SAFETY WARNING

1. This bed is designed for use only mattress (es) meeting the following specifications on the upper bunk, and lower bunk:

Upper bunk

Bed type	Length	Width	Thickness
Twin Standard	79” - 80”	38 ½"	6" max

Lower bunk

Bed type	Length	Width	Thickness
Queen Standard	79” - 80”	59 ½"	8" max

2. Replacement parts, including additional guardrails, maybe obtained from any of our dealers

3. Follow the information on the warnings appearing on the upper bunk bed end structure and on the carton. Do not remove warning label from bed.
4. Always use the recommended size mattresses or mattress supports, or both, to help prevent the likelihood of entrapment or falls.
5. Surface of mattress must be at least 5" (127mm) below the upper edge of guardrails.
6. Do not allow children under 6 years of age to use the upper bunk.
7. Periodically check and ensure that the guardrail, ladder, and other components are in their proper position, free from damage, and that all connectors are tight.
8. Do not allow horseplay on or under the bed and prohibit jumping on the bed.
9. Always use the ladder for entering and leaving the upper bunk.
10. Do not use substitute part. Contact the manufacture or dealer for replacement part.
11. Use of a night light may provide added safety precaution for a child using the upper bunk.
12. Always use guardrails on both long sides of the upper bunk. If the bunk bed will be placed next to the wall, the guardrail that runs the full length of the bed should be placed against the wall to prevent entrapment between the bed and wall.
13. The use of water or sleep flotation mattresses is prohibited.
14. STRANGULATION HAZARD - Never attach or hang items to any part of the bunk bed that are not designed for use with the bed; for example, but not limited to, hook, belts and jump ropes.
15. Keep these instruction for future reference.
16. Prohibit more than one person on upper bunk
17. We recommend assembling your bunk bed on the shipping carton to protect your floor or carpet.
18. Be certain all staples are out of the box before beginning assembly on the shipping carton.

ASSEMBLY INSTRUCTIONS

BUNK BED

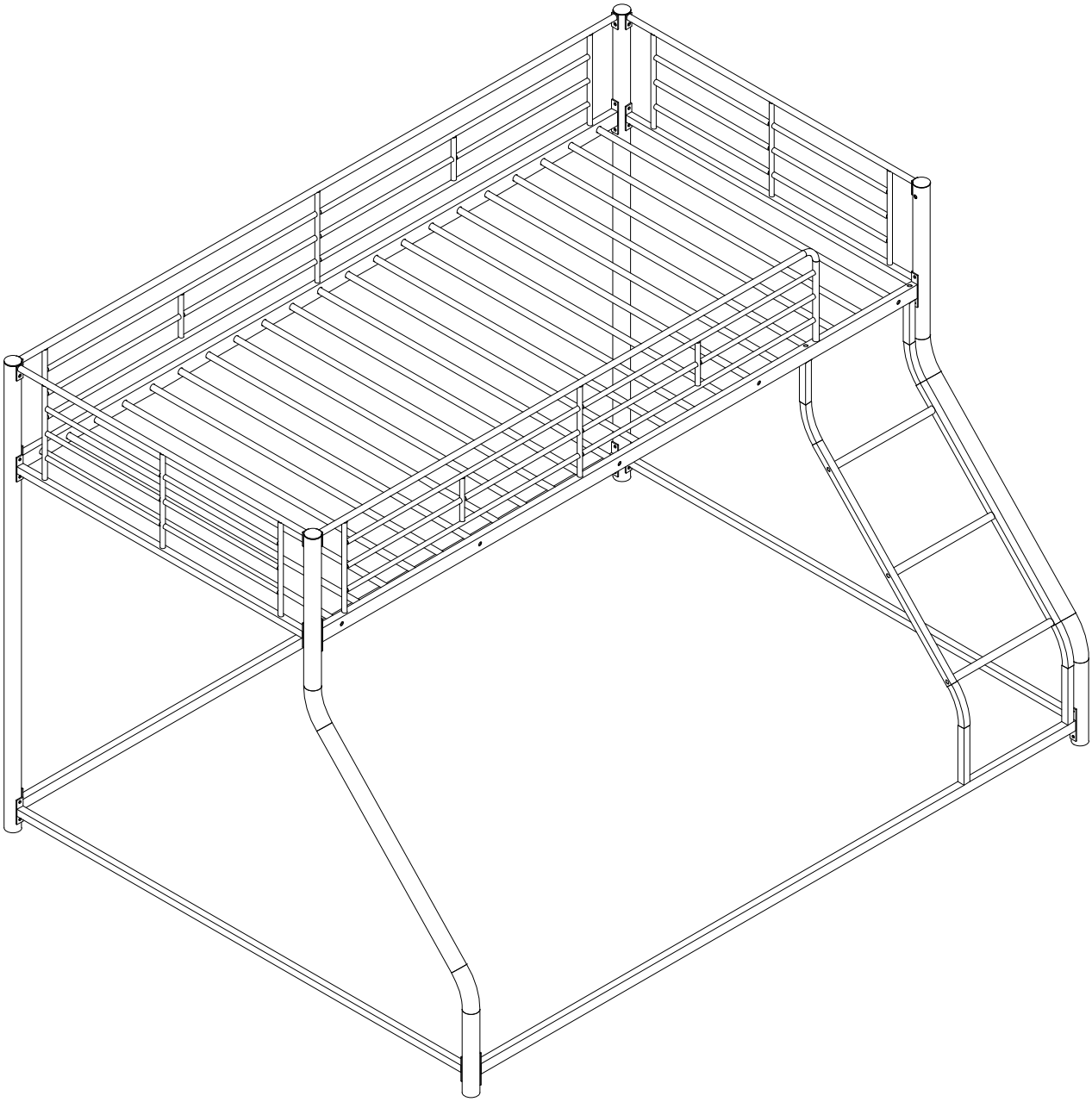

Thank you for purchasing this quality product. Be sure to check all packing material carefully for small parts which may have come loose inside the carton during shipment. Separate, identify and count all parts and hardware. Compare with the parts list to be sure all parts are present.
"DO NOT TIGHTEN SCREWS UNTIL COMPLETELY ASSEMBLED"

Detail View

BUNK BED

IMPORTANT:
PLEASE READ INSTRUCTION BEFORE STARTING THE ASSEMBLY

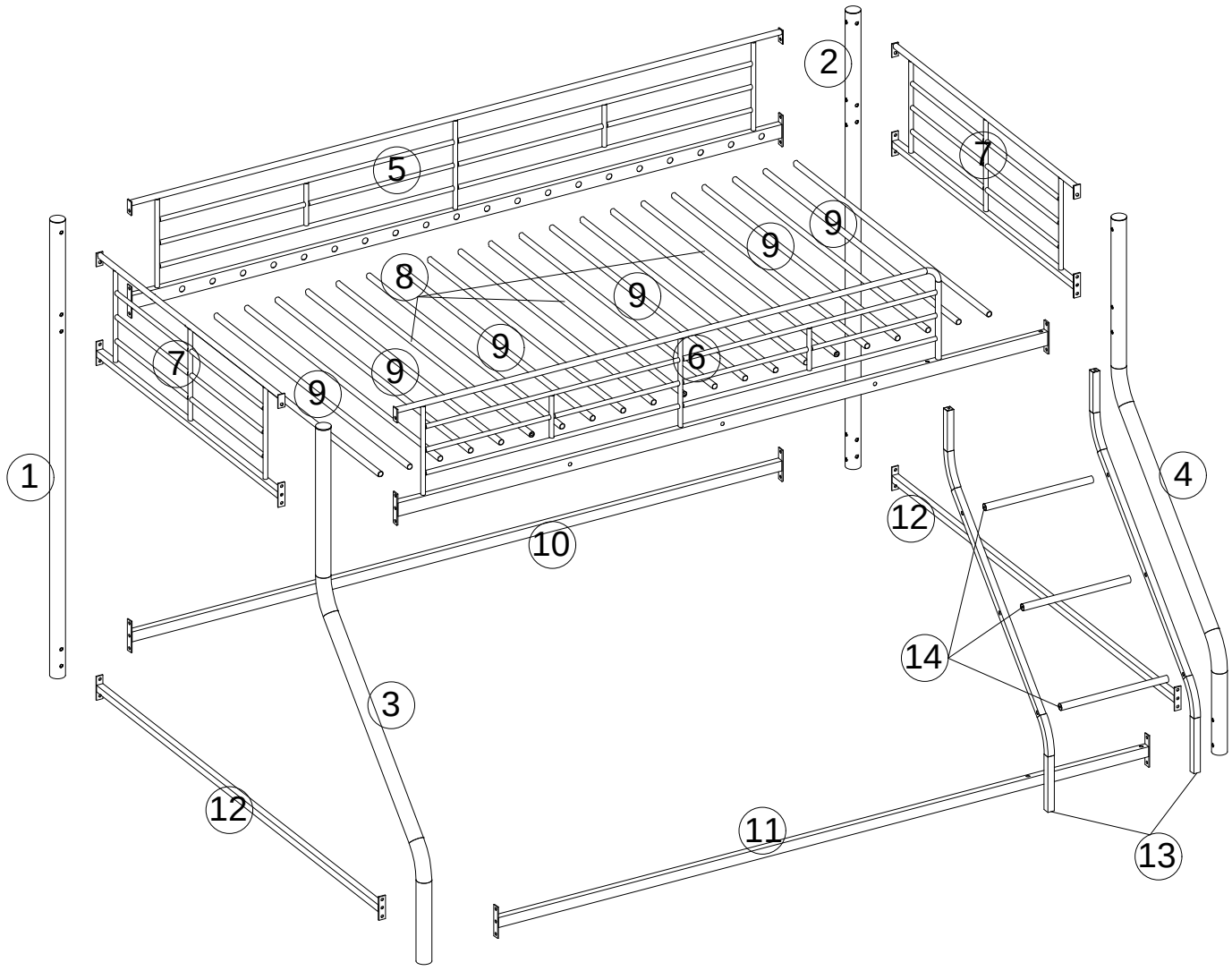

PART LIST

1 Vertical bar 1 pc	2 Vertical bar 1 pc	3 Vertical bar  1 pc	4 Vertical bar  1 pc
5 Guard Frame 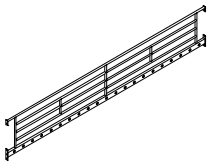 1 pc	6 Guard Frame 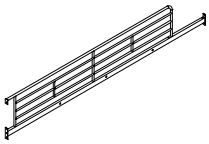 1 pc	7 Guard Frame 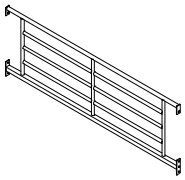 2 pcs	8 Slats 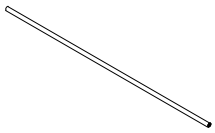 3 pcs
9 Slats 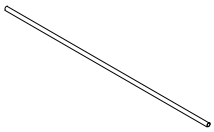 18 pcs	10 Horizontal bar 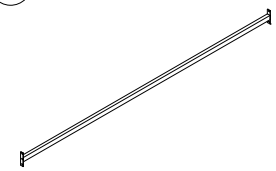 1 pc	11 Horizontal bar 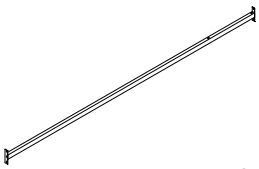 1 pc	12 Horizontal bar 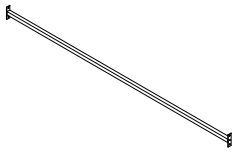 2 pcs
13 Stair  2 pcs	14 Stair 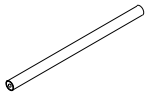 3 pcs		

HARDWARE LIST

A Bolts 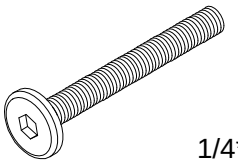 1/4*55 4 pcs	B Bolts 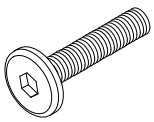 1/4*32 6 pcs	C Bolts 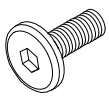 1/4*18 45 pcs	D Allen Key  4*59 1 pc

BUNK BED
ASSEMBLY INSTRUCTIONS

STEP 1

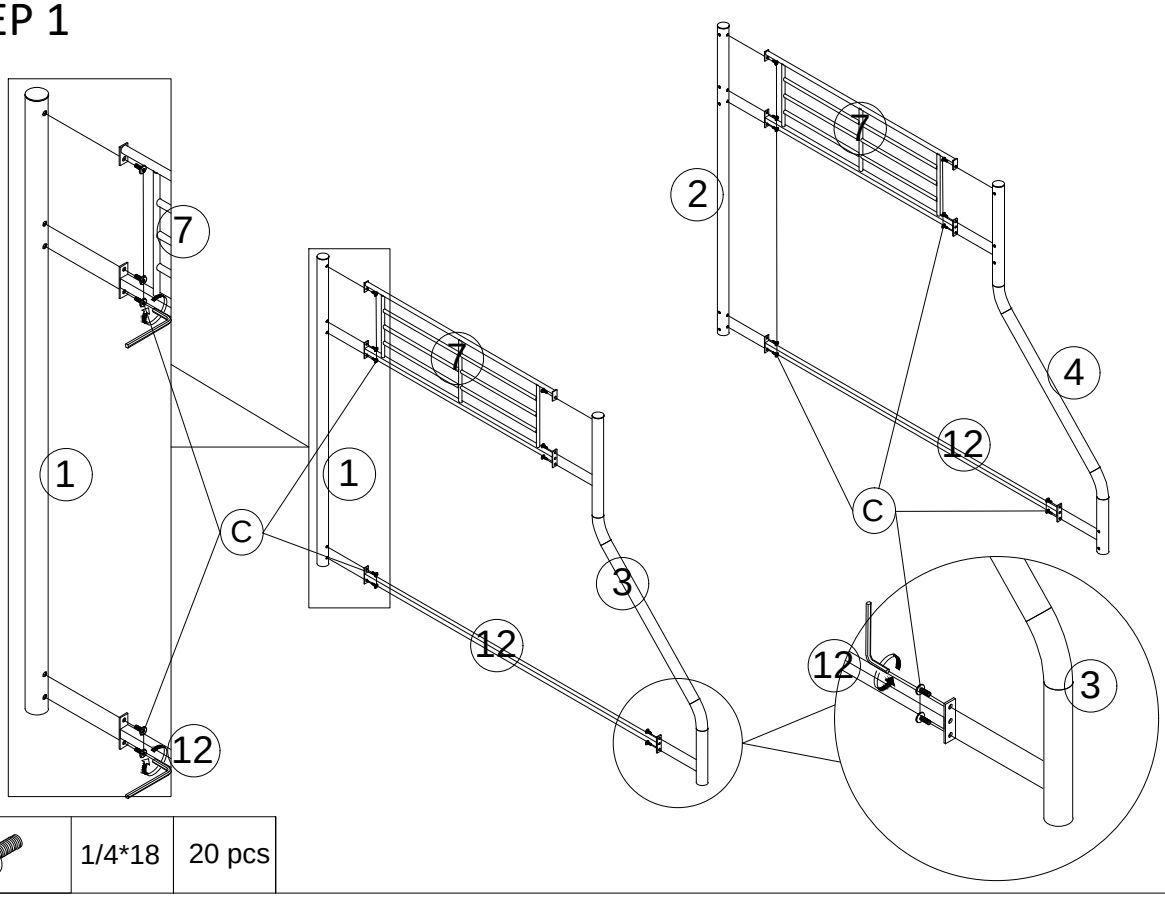

C		1/4*18	20 pcs

STEP 2

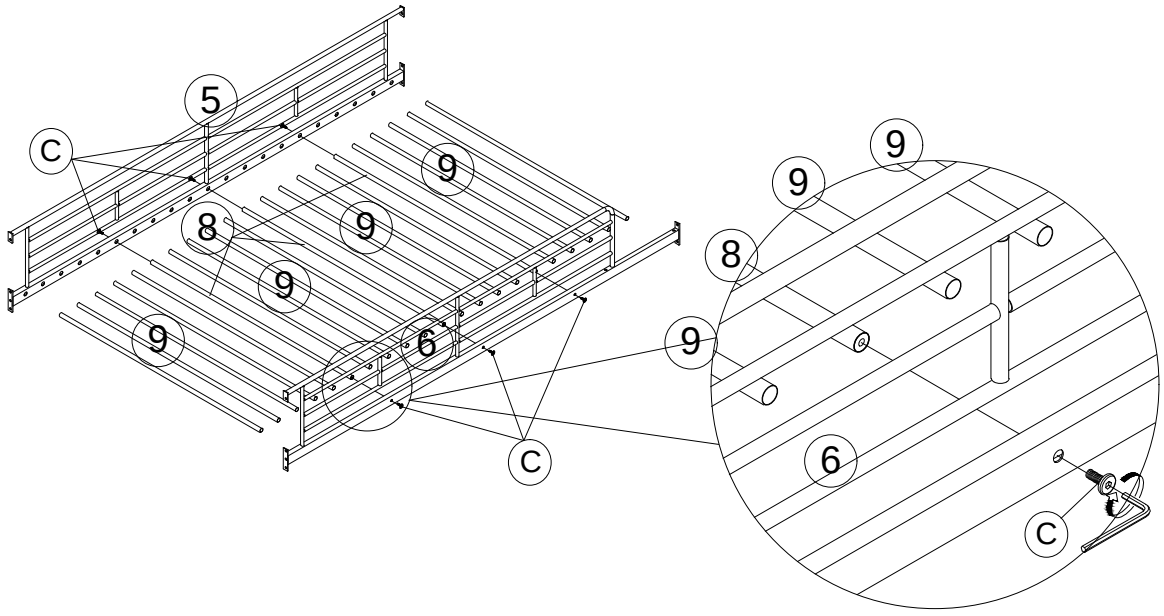

C		1/4*18	6 pcs

BUNK BED
ASSEMBLY INSTRUCTIONS

STEP 3

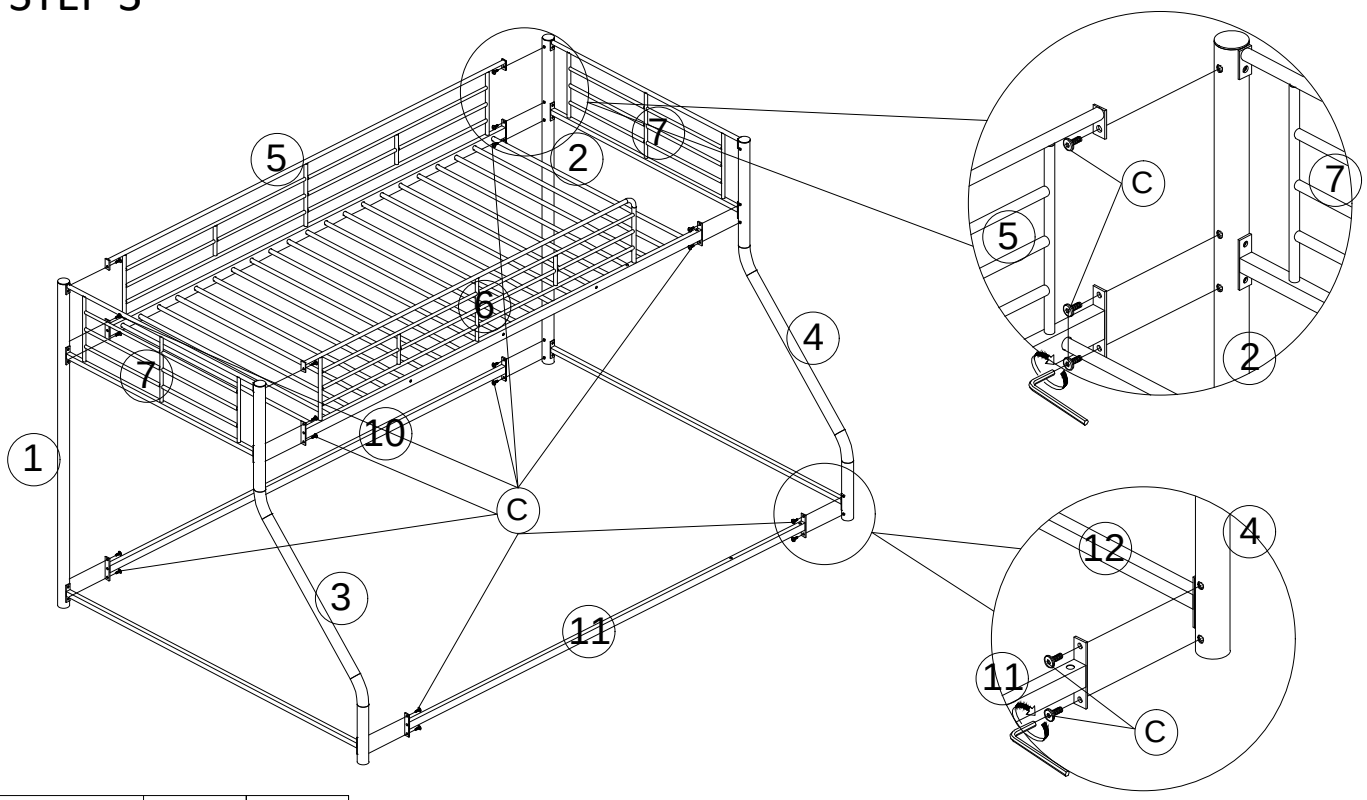

C		1/4*18	19 pcs

STEP 4

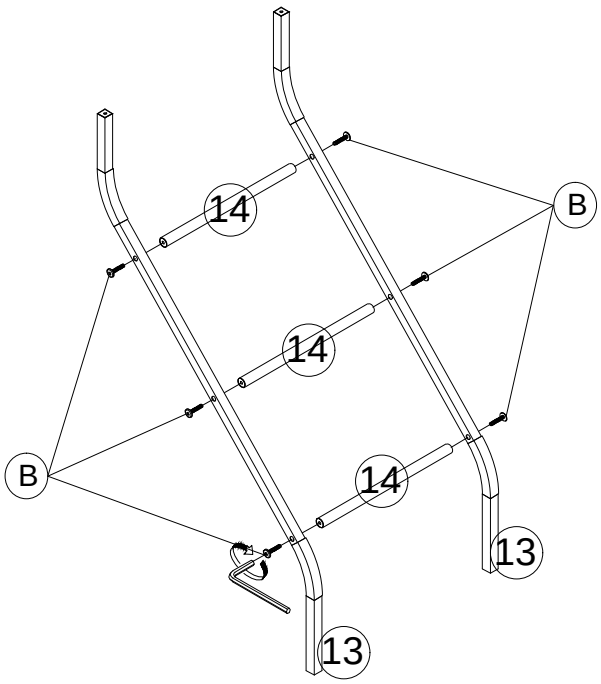

B		1/4*32	6 pcs

BUNK BED
ASSEMBLY INSTRUCTIONS

STEP 5

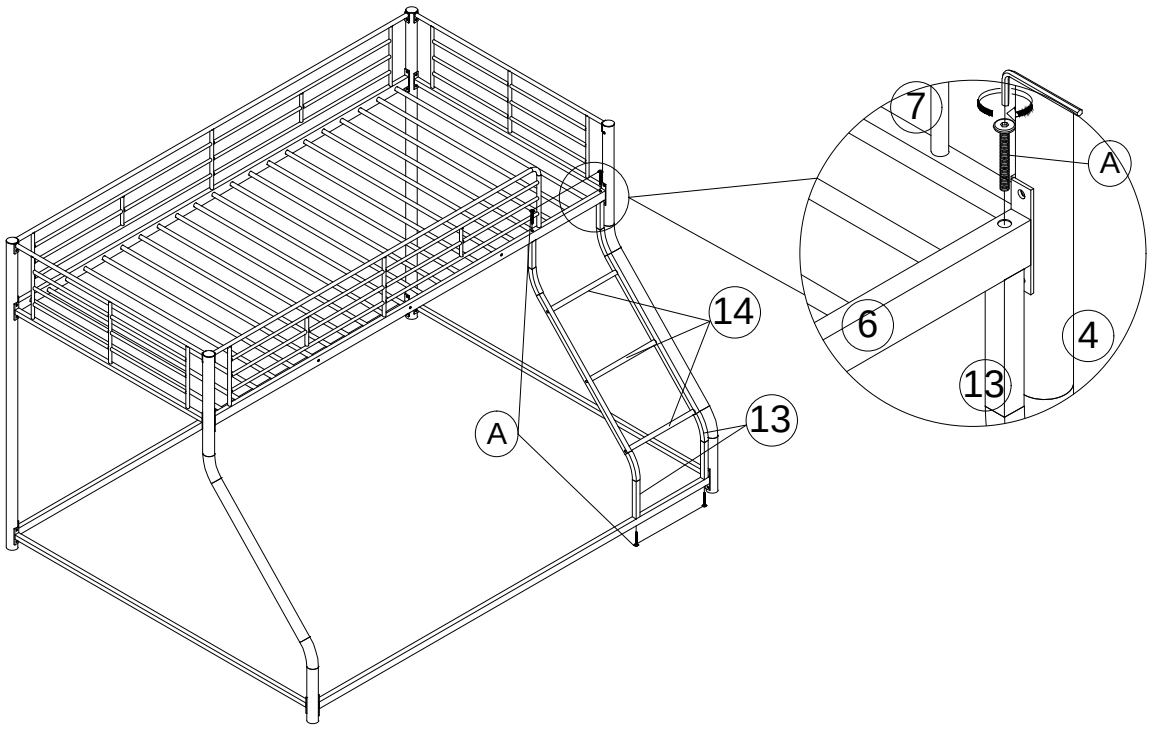

A	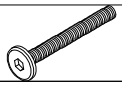	1/4*55	4 pcs

COMPLETE

