# TV STAND

## Assembly Instructions - Please keep for future reference

**NOTE:**

Comes with TWO PACKAGES with TWO TRACKINGS,may NOT be delivered at the same time.

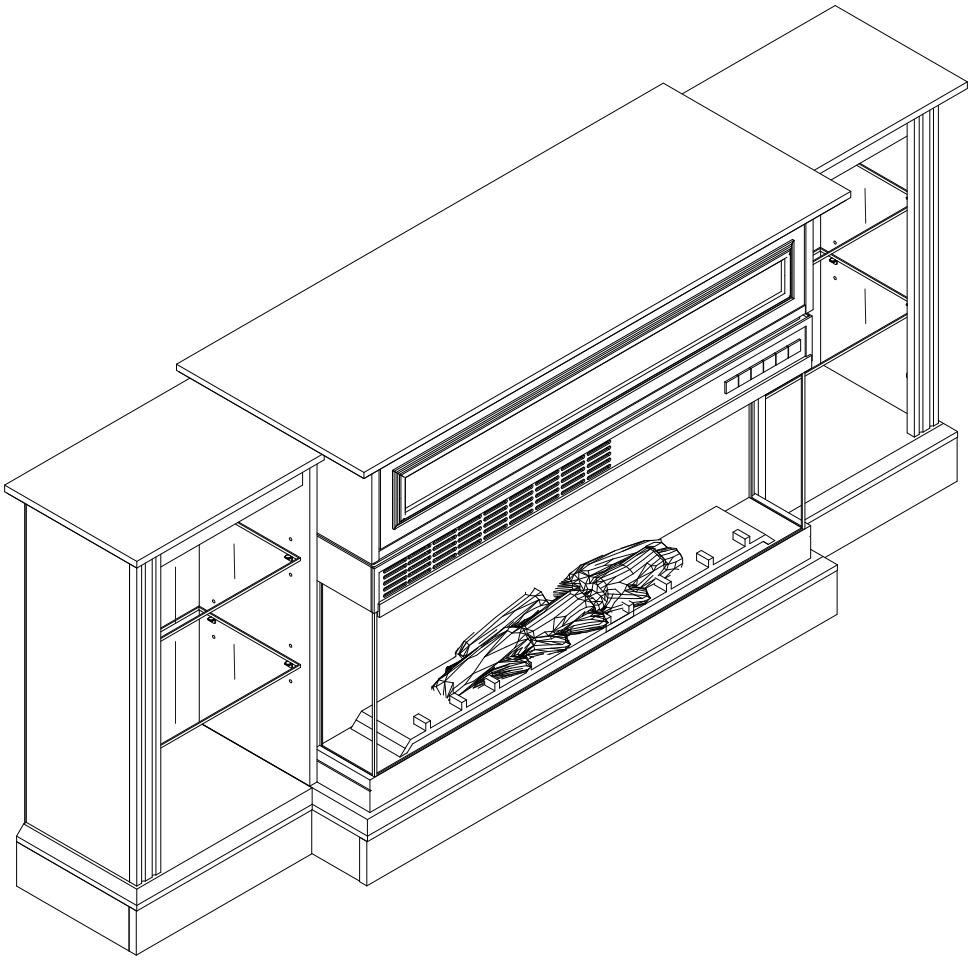

## Dimensions

Width - 70inch
Depth - 15.4inch
Height - 30inch

## Important – Please read these instructions fully before starting assembly

# Safety and Care Advice

## **Important** – Please read these instructions fully before starting assembly

• Check you have all the components and tools listed on the following pages.

• Remove all fittings from the plastic bags and separate them into their groups.

• Keep children and animals away from the work area, small parts could choke if swallowed.

• Make sure you have enough space to layout the parts before starting.

• During assembly do not stand or put weight on the product, this could cause damage.

• Assemble the item as close to its final position (in the same room) as possible.

• Assemble on a soft level surface to avoid damaging the unit or your floor.

• Parts of the assembly will be easier with 2 people.



• To reduce the likelihood of damaging your product please ensure that your power drill is set on a low torque setting.

## Care and maintenance

• Only clean using a damp cloth and mild detergent, do no use bleach or abrasive cleaners.

• From time to time check that there are no loose screws on this unit.

• This product should not be discarded with household waste. Take to your local authority waste disposal centre.

## Handy Hints

• Assemble all parts and bolts loosely during assembly, only once the product is complete should you fully tighten the bolts

• Regularly check and ensure that all bolts and fittings are tightend properly.

## WARNING
### In order to help prevent overturning – please follow these instructions

To help prevent product toppling over please follow the below steps:-

Use the anti tip strap or wall fixing method provided (if applicable)
Do not allow children to climb or hang on the furniture
Do not open more than one drawer at a time
Do not place heavy items in the top drawers
Do not place heavy items on top of the furniture, unless the furniture has been designed for this purpose

Please note that only the anti tip strap is provided.
You will need to provide wall plugs and screws applicable for your wall type

# Components - Fittings

## Please check you have all the fittings listed below

***Note:*** The quantities below are the correct amount to complete the assembly. In some cases more fittings may be supplied than are required.

| | | |
|---|---|---|
| **A**  Cam Bolt x 49 | **B**  Cam Lock x 49 | **C**  6*30mm Wooden Dowel x 54 |
| **D**  3.5*14mm Screw x 28 | **E** 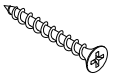 5*40mm Screw x 4 | **F**  5*50mm Screw x 8 |
| **G** 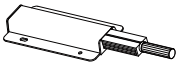 Push-open Latch x 1 | **H**  6*25mm Bolt x 8 | **I**  Allen Key x 1 |
| **J**  Protective Foot x 9 | **K**  L Shape Bracket x 4 | **L**  3*16mm Screw x 18 |
| **M** 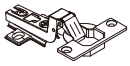 Hinge x 2 | **N**  Shelf Support Pin x 16 | **O**  Wall Fixing Pack x 2 |
| **P** 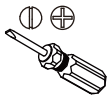 Reversible Screwdriver x 1 | | |

## Tools required



Phillips screwdriver
(medium & large)

## **Ruler** - Use this ruler to help correctly identify the screws

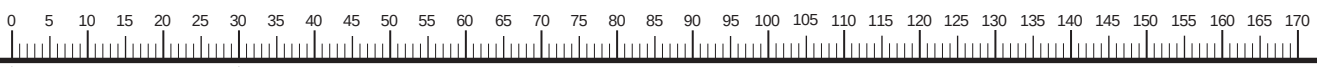




The screws length is measured from the head to the point (30mm screw shown).

# Using Camlocks

## Step 1

Connect the male camlock as directed in the assembly instructions using a screwdriver.

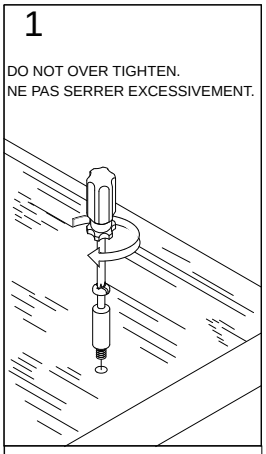


## Step 2

Push the male camlock into the entry hole.

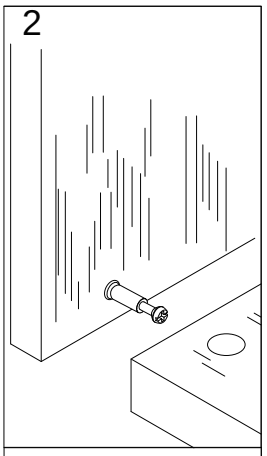


## Step 3

Insert the female camlock as shown in the instructions.

Note: ensure that the arrow on the top of the camlock points towards the entry hole for the male camlock.

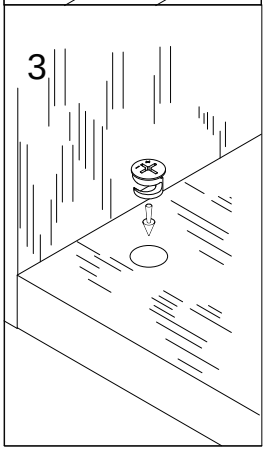


## Step 4

Turn the female camlock clockwise with a screwdriver.

You should feel a click when the camlock is locked in place.

The joint is now secure.

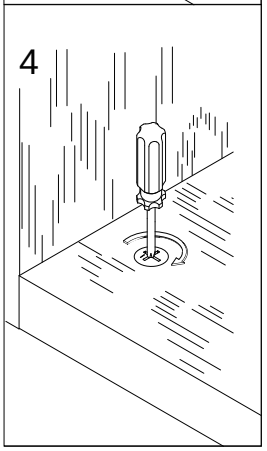

# Components - Panels

## Please check you have all the panels listed below

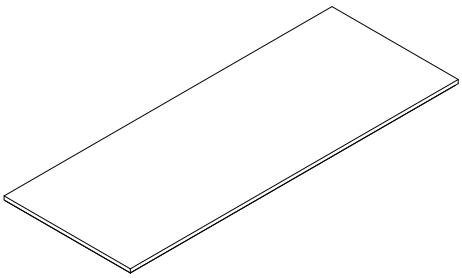

**1** (39 x 100.7 x 3cm) x1

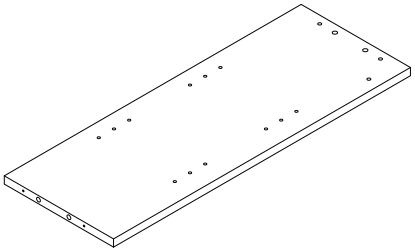

**2** (23 x 62.5 x 1.5cm) x1

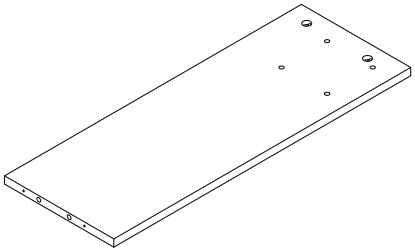

**3** (23 x 62.5 x 1.5cm) x1

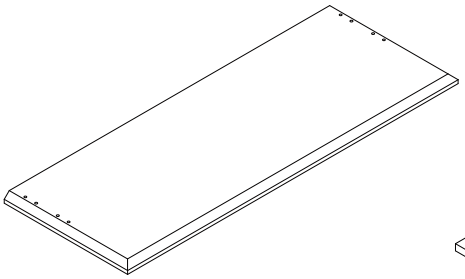

**4** (36.4 x 97.4 x2.5cm) x1

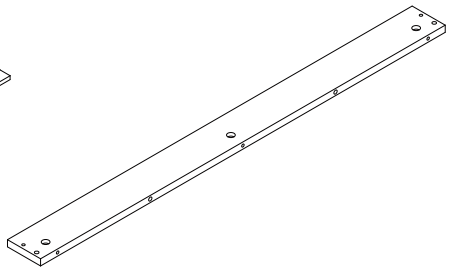

**5** (8 x 97.4 x1.5cm) x1

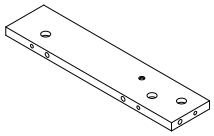

**6** ( 8 x 34.8 x 1.5cm) x1

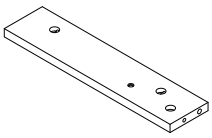

**7** (8 x 34.8 x 1.5cm) x1

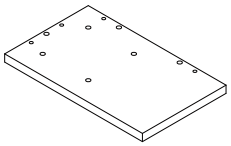

**8** (17.6 x 29 x 1.5cm) x1

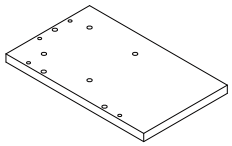

**9** (17.6 x 29 x 1.5cm) x1

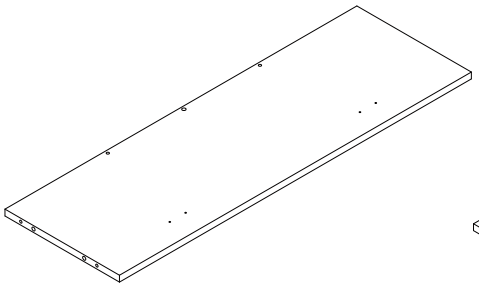

**10** (28.9 x 88.8 x 1.5cm) x1

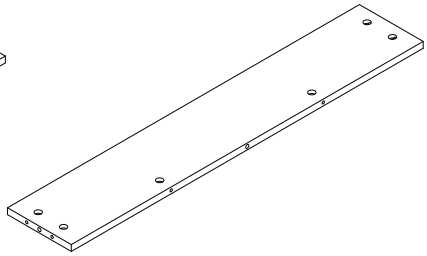

**11** (16x 88.8 x 1.5cm) x1

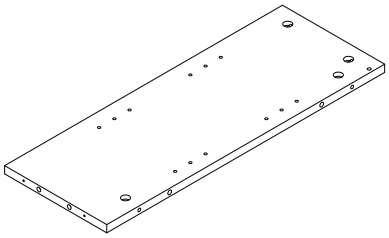

**12** (21.5 x 58.5 x 1.5cm) x1

# Components - Panels

## Please check you have all the panels listed below

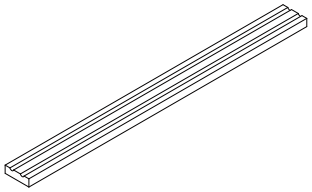

**13** (5 x 58.5 x 1.5cm) x2

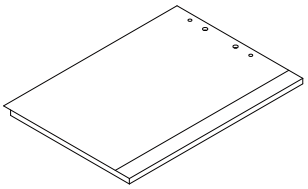

**14** (24.8 x 40.3 x 2.5cm) x1

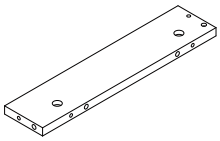

**15** (8 x 39.1 x 1.5cm) x1

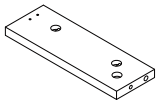

**16** (8 x 23.2 x1.5cm) x1

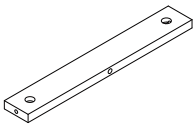

**17** (5 x 37.1 x 1.5cm) x2

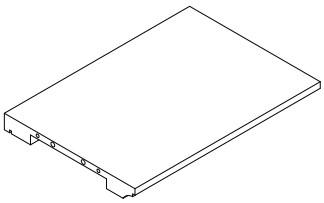

**18** (27.5 x 41.5 x 3cm) x1

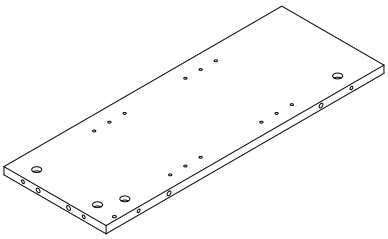

**19** (21.5 x 58.5 x 1.5cm) x1

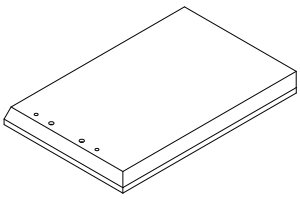

**20** (24.8 x 40.3 x 2.5cm) x1

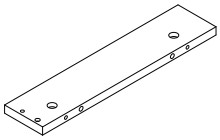

**21** (8 x 39.1 x 1.5cm) x1

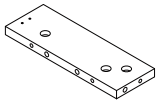

**22** (8 x 23.2 x1.5cm) x1

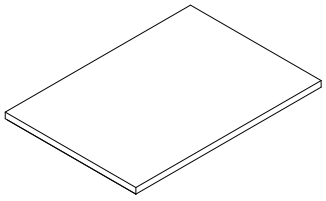

**23** (27.5 x 41.5 x 3cm) x1

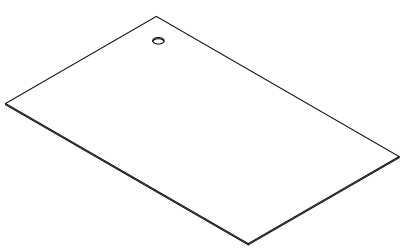

**24** (39.7 x 60 x 0.27cm) x2

# Components - Panels

## Please check you have all the panels listed below

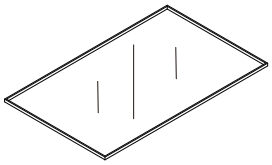

**25** (21.3 x 36.9 x 0.5cm) x4

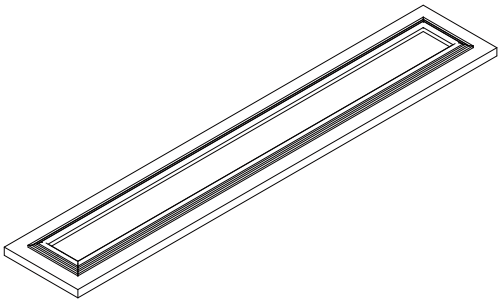

**26** (15.4 x 88.2 x 2.5cm) x1

# Assembly Instructions

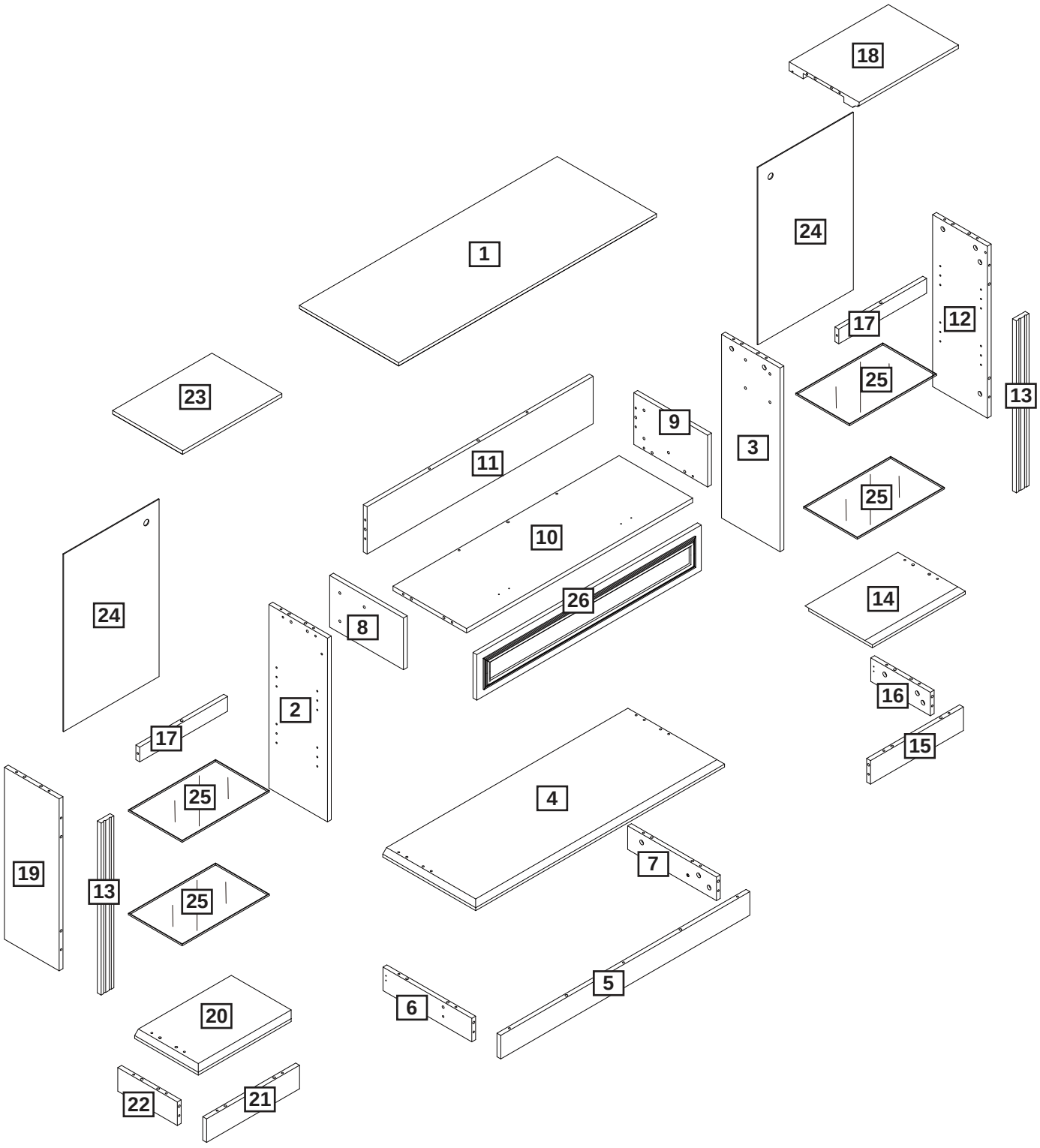

# Assembly Instructions

## Step 1

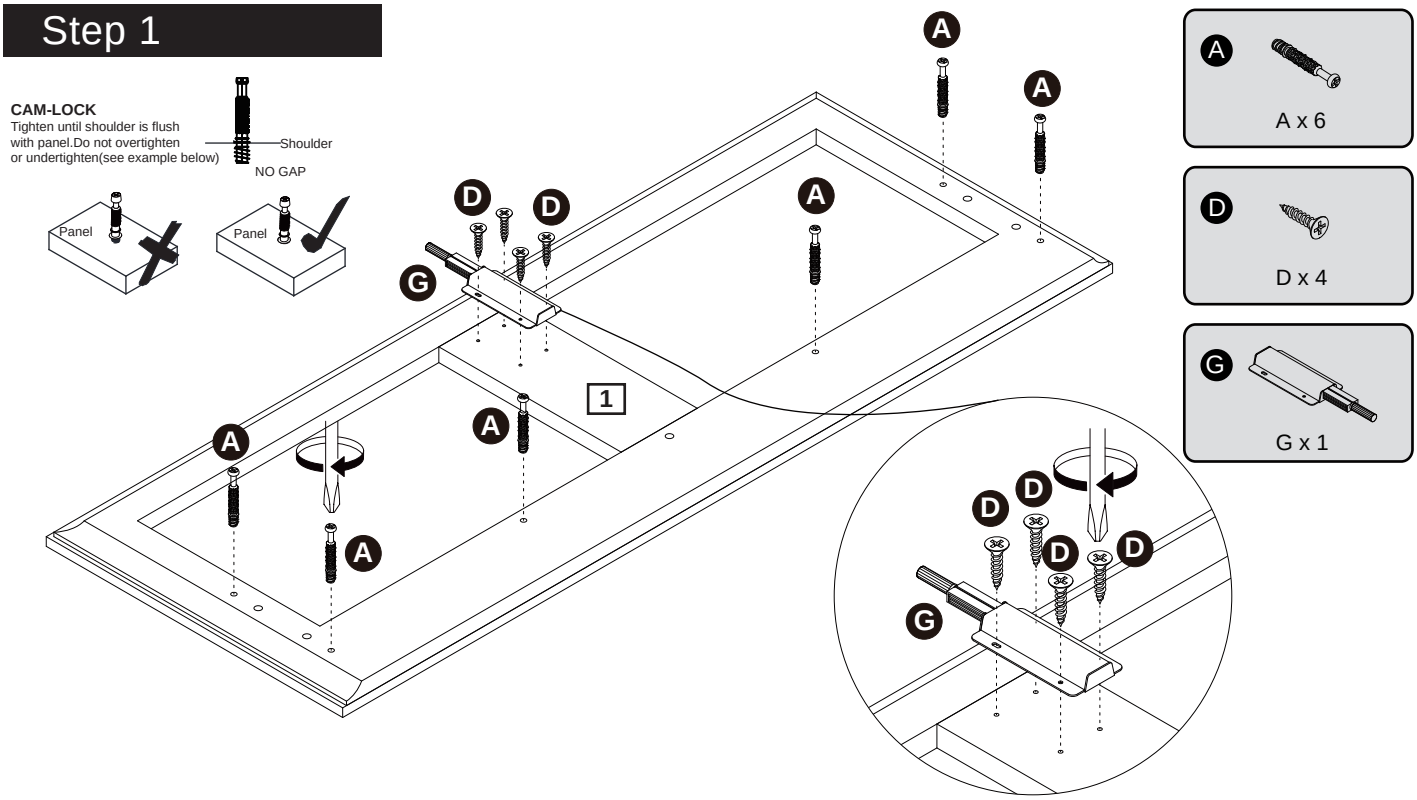


Attach cam bolt (A) to part (1) with a screwdriver.
Use screw (D) to secure push-open latch(G) to part (1) with a screwdriver.

## Step 2

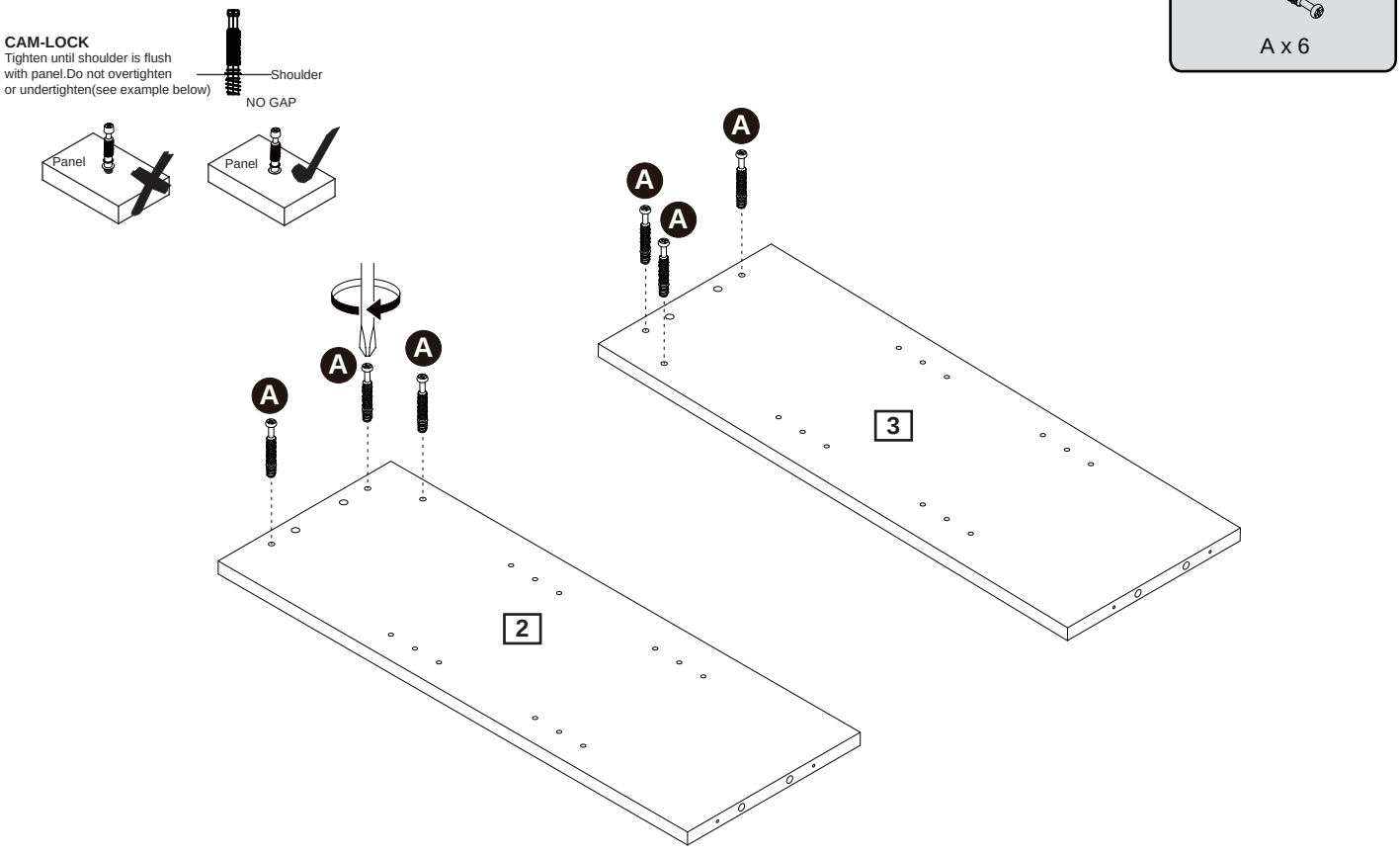


Attach cam bolt (A) to part (2, 3) with a screwdriver.

# Assembly Instructions

## Step 3

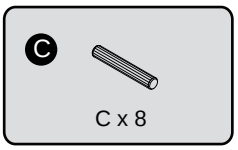


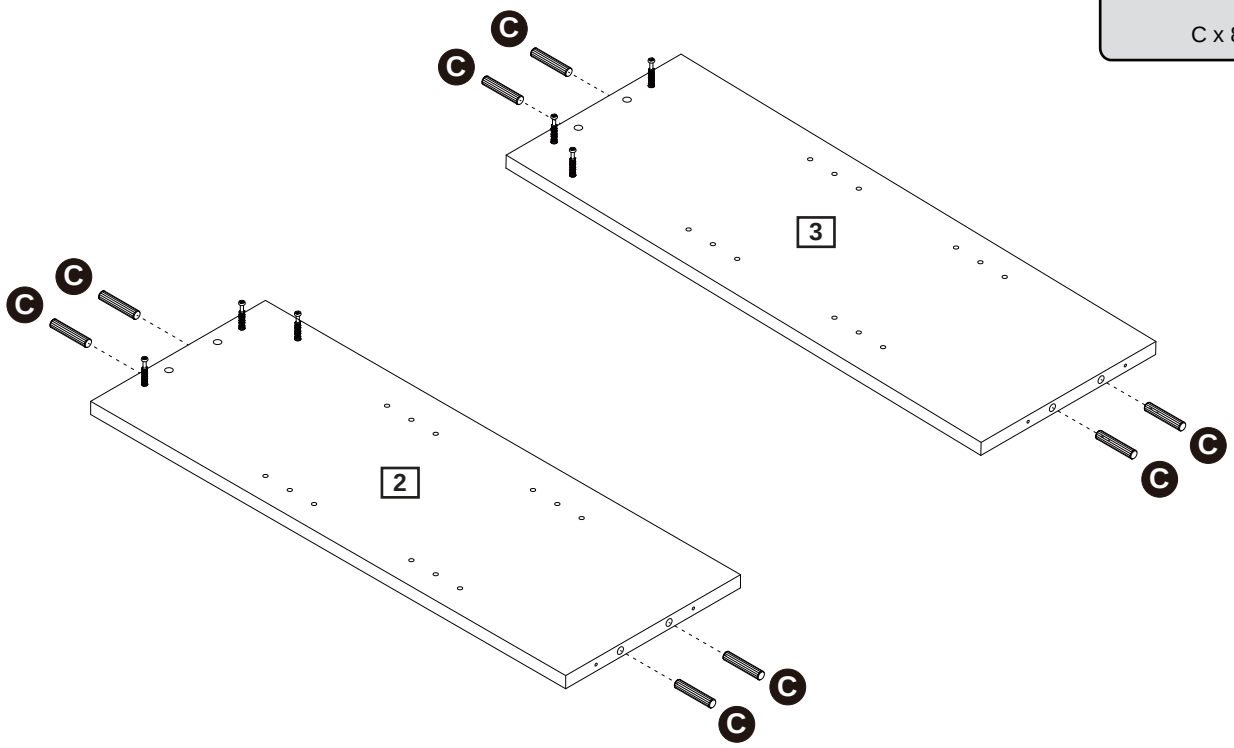


Insert wooden dowel (C) into part (2, 3).

## Step 4

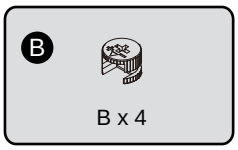


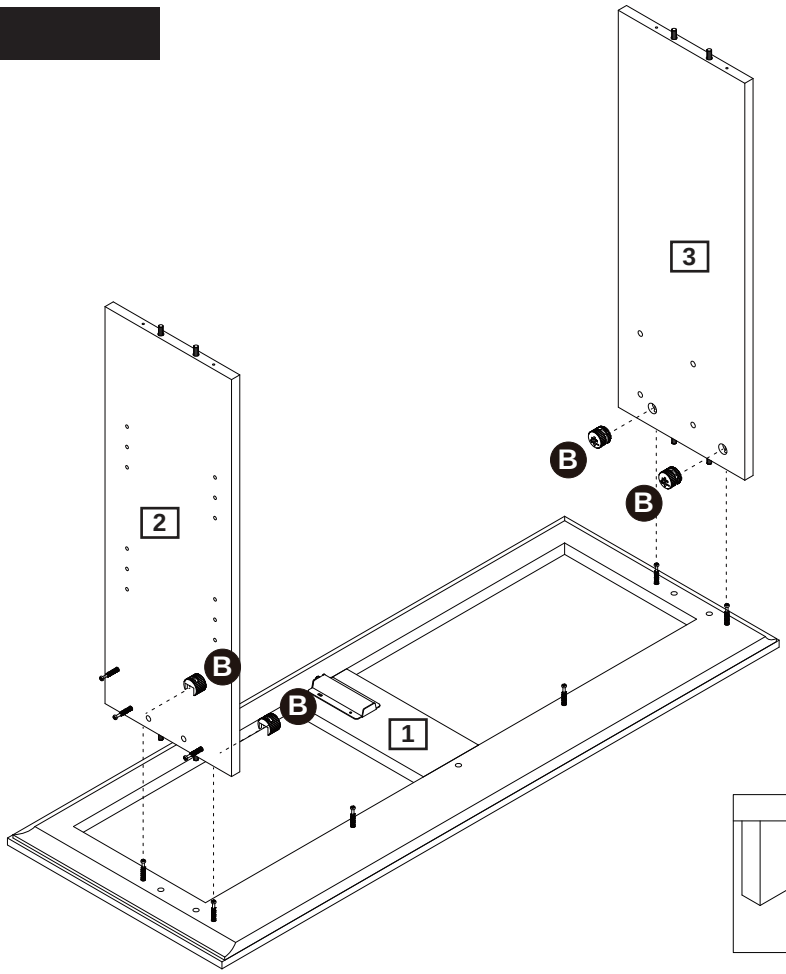


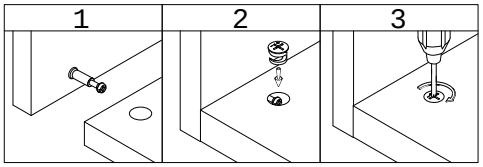


Attach part (2, 3) to part (1), then insert and secure cam lock (B) to part (2, 3) to lock it .

# Assembly Instructions

## Step 5

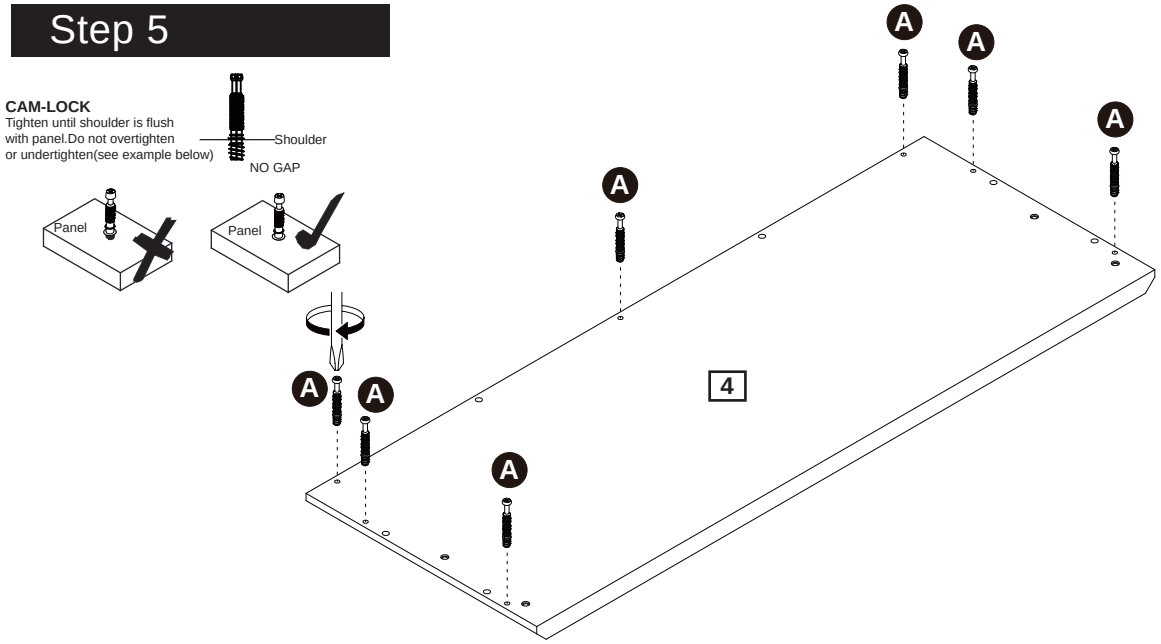


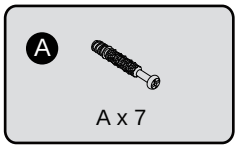


Attach cam bolt (A) to part (4) with a screwdriver.

## Step 6

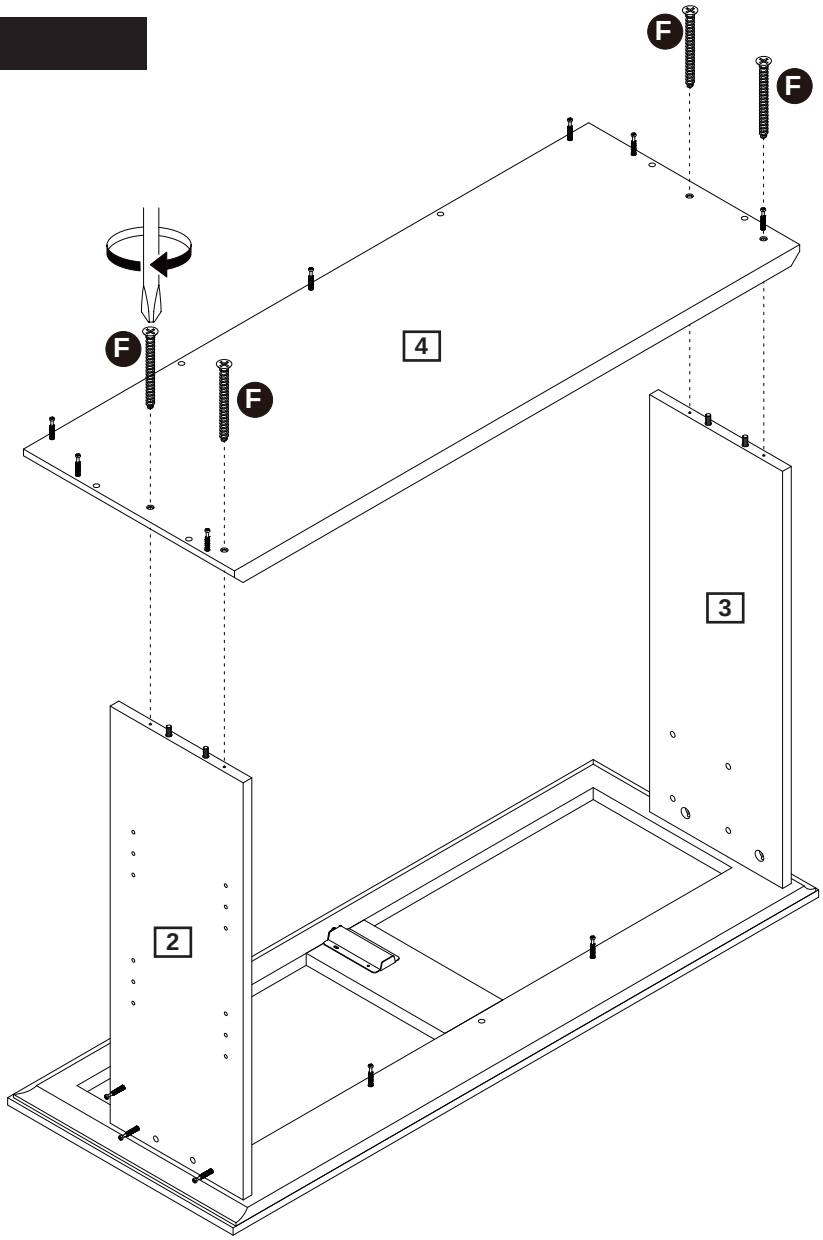


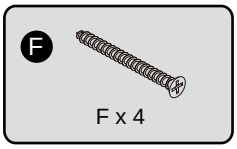


Attach part (4) to part (2, 3) using screw (F) with a screwdriver.

# Assembly Instructions

## Step 7

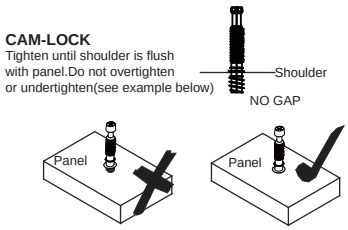


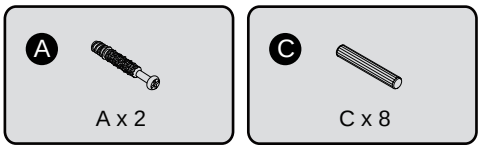





Insert wooden dowel (C) into part (5, 6, 7).
Attach cam bolt (A) to part (5) with a screwdriver.

## Step 8

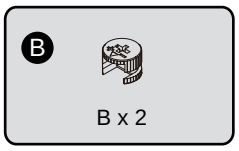


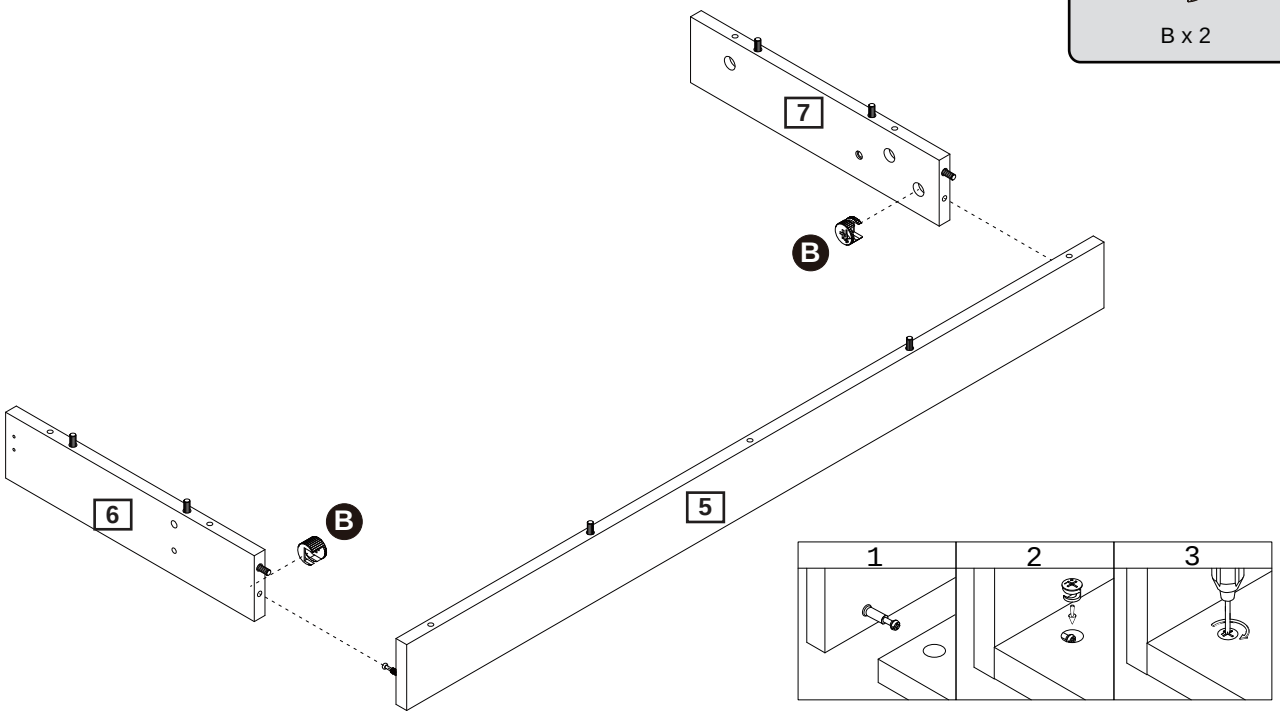


Attach part (6, 7) to part (5), then insert and secure cam lock (B) to part (6, 7) to lock it .

# Assembly Instructions

## Step 9

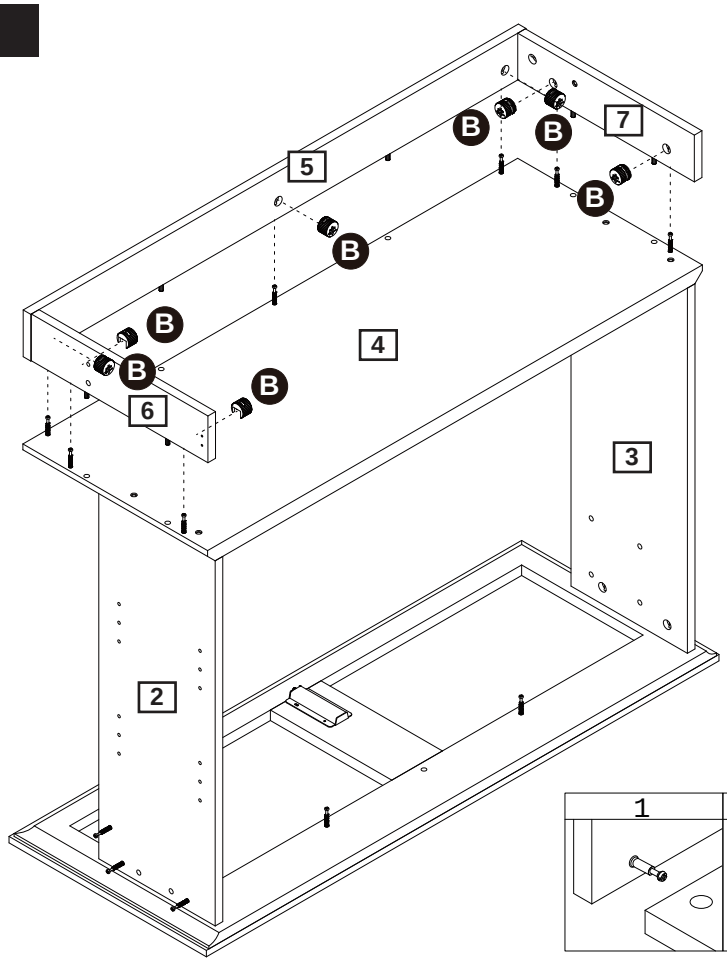


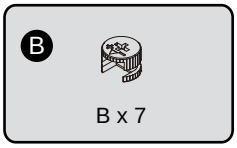


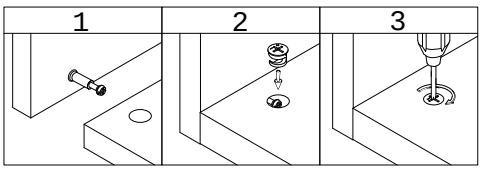


Attach part (5, 6, 7) to part (4), then insert and secure cam lock (B) to part (5, 6, 7) to lock it .

## Step 10

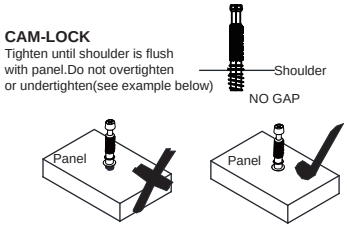


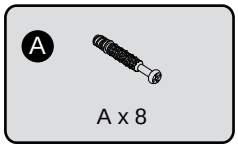


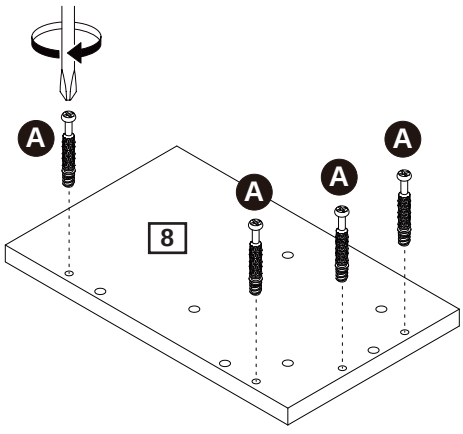


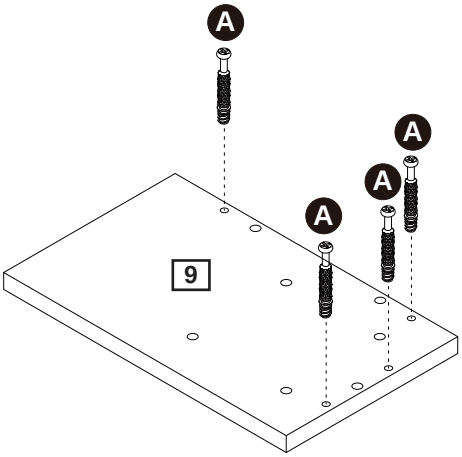


Attach cam bolt (A) to part (8, 9) with a screwdriver.

# Assembly Instructions

## Step 11

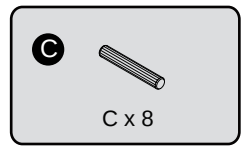


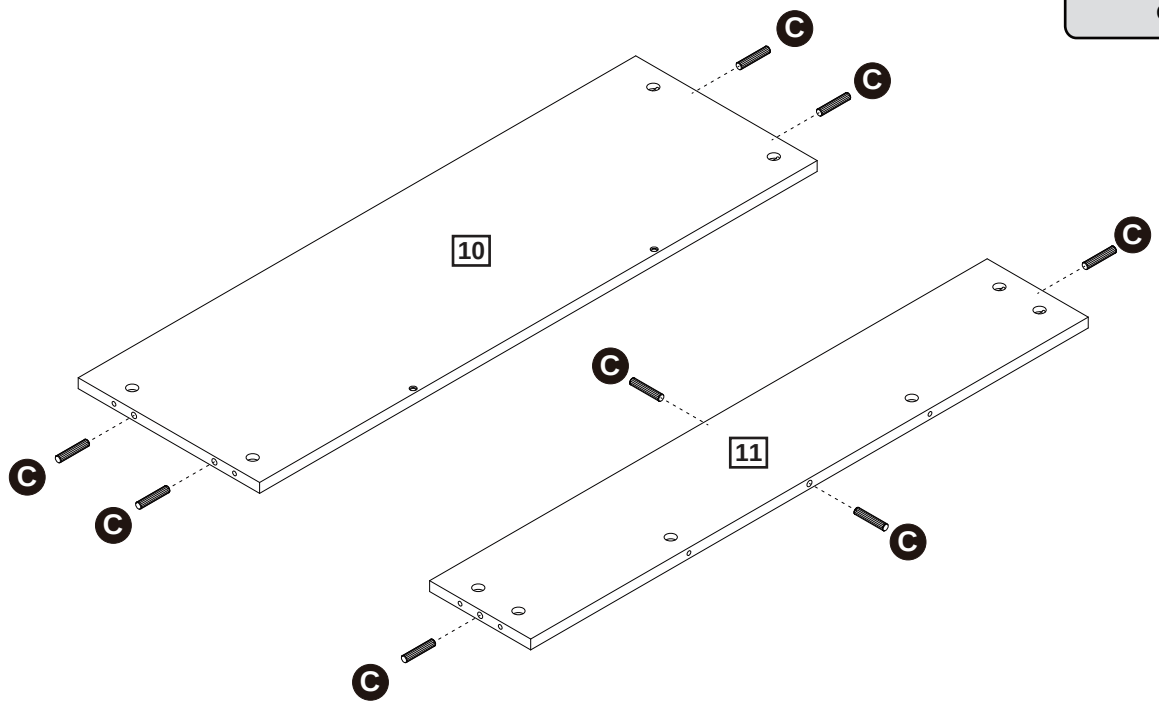


Insert wooden dowel (C) into part (10, 11).

## Step 12

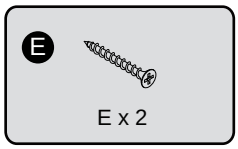





Attach part (10) to part (11) using screw (E) with a screwdriver.

# Assembly Instructions

## Step 13

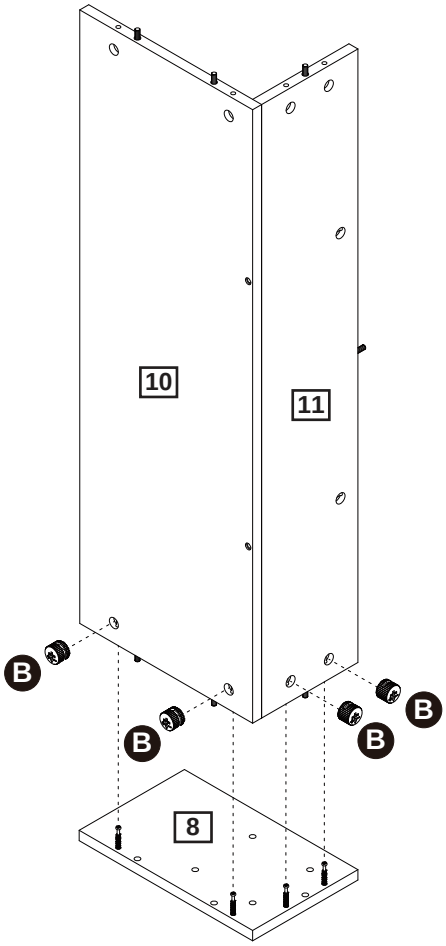


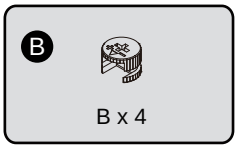


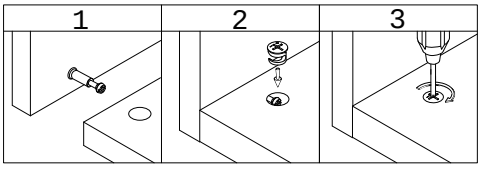


Attach part (10, 11) to part (8), then insert and secure cam lock (B) to part (10, 11) to lock it .

## Step 14

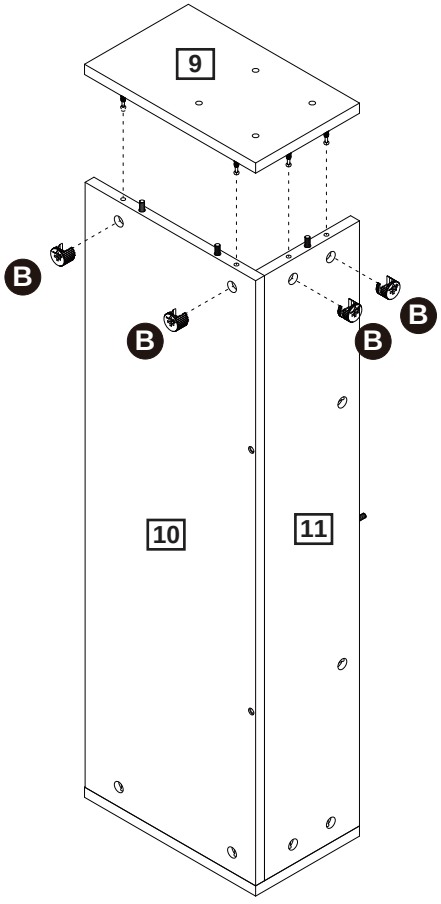


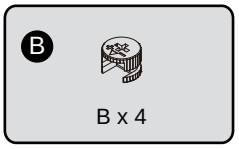


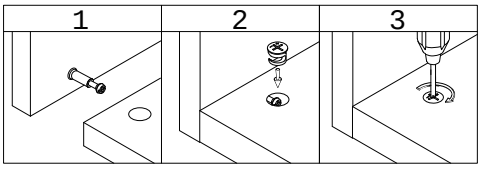


Attach part (9) to part (10, 11), then insert and secure cam lock (B) to part (10, 11) to lock it .

# Assembly Instructions

## Step 15

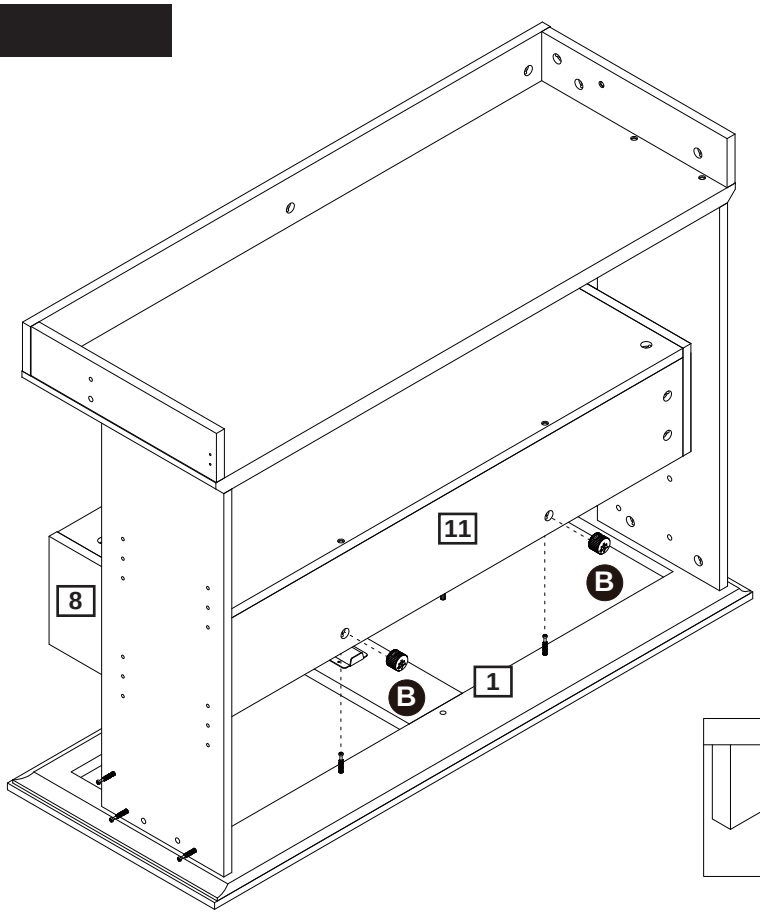


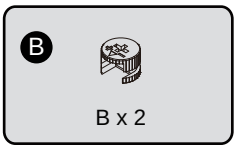


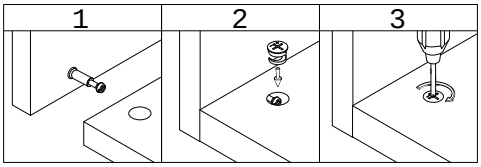


Attach part (11) to part (1), then insert and secure cam lock (B) to part (11) to lock it .

## Step 16

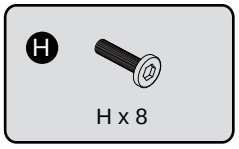


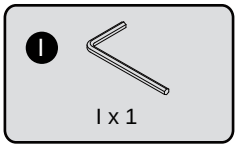


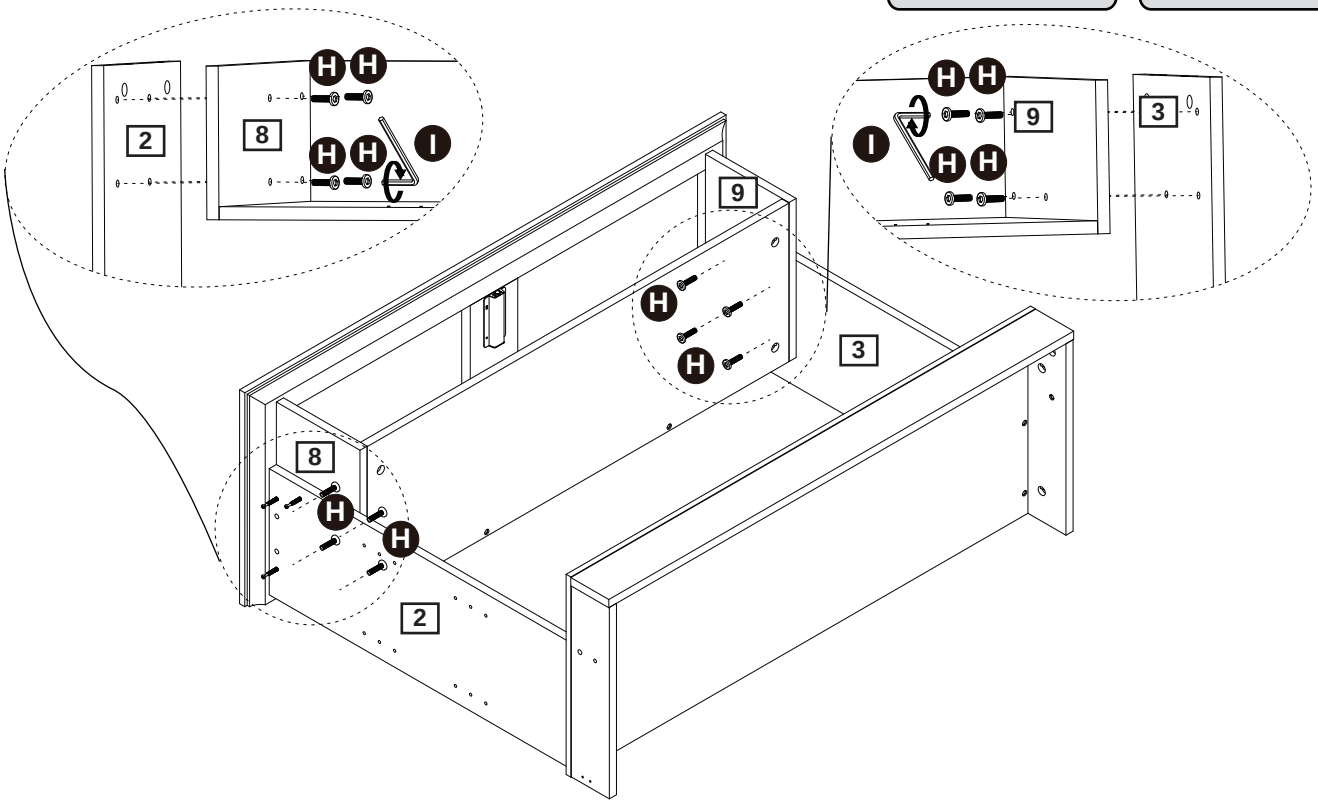


Attach part (9) to part (3) and attach part (8) to part (2) using bolt (H) with allen key (I).

# Assembly Instructions

## Step 17

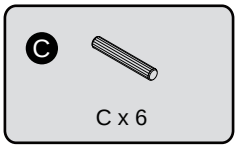


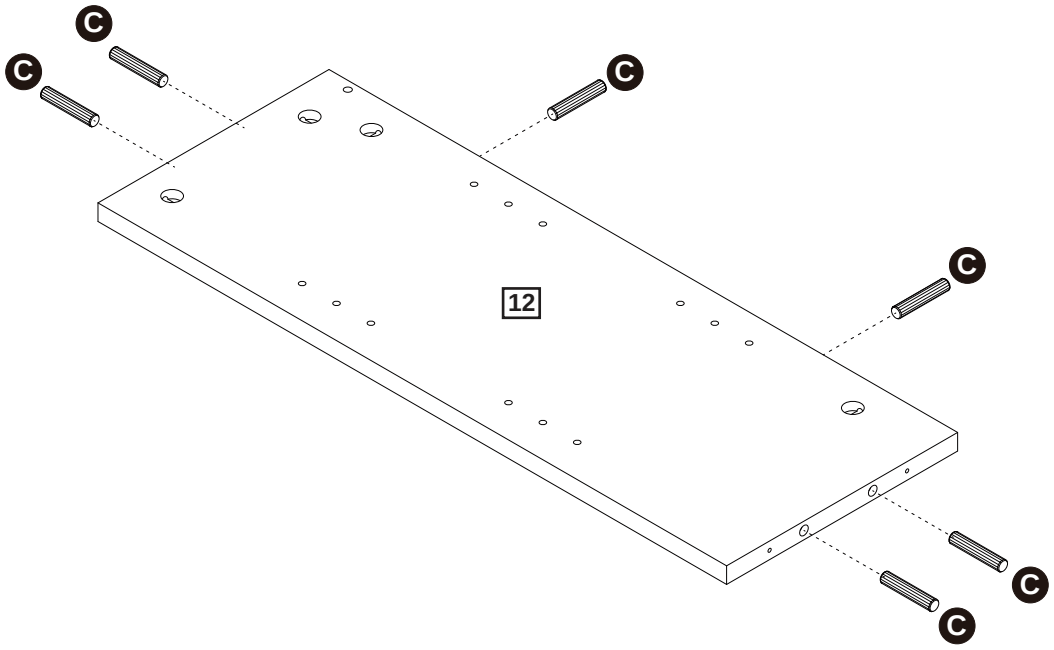


Insert wooden dowel (C) into part (12).

## Step 18

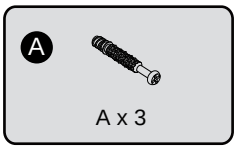


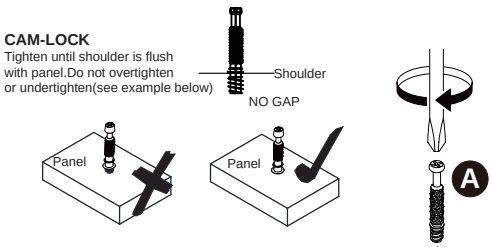


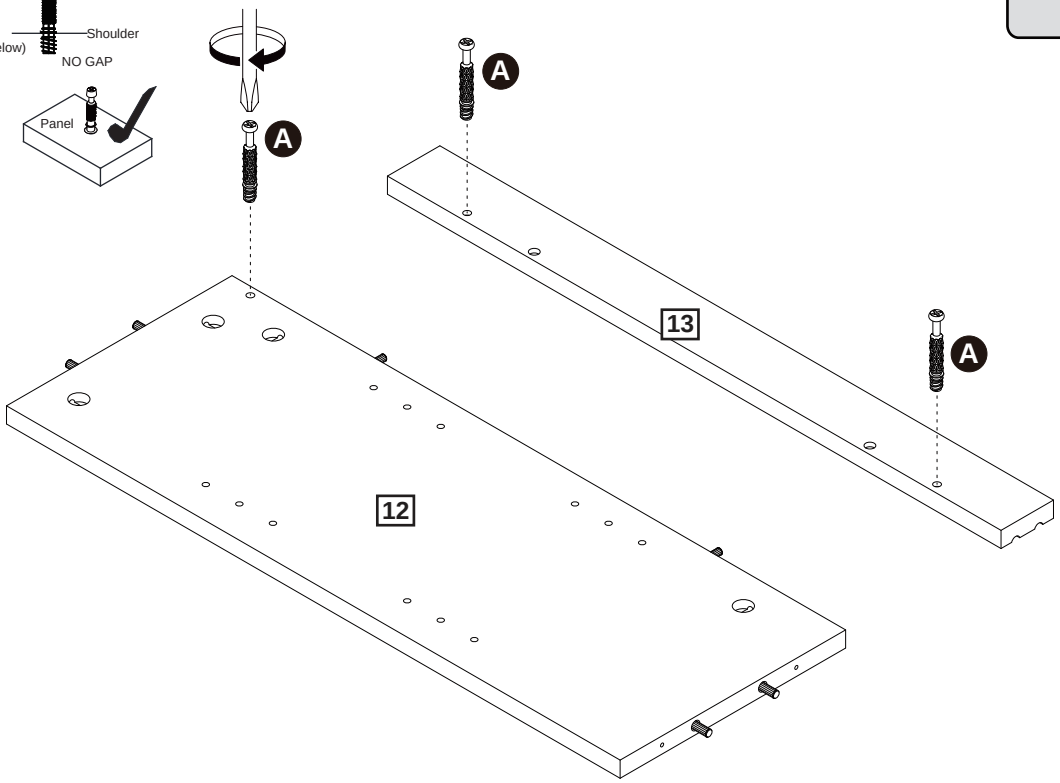


Attach cam bolt (A) to part (12, 13) with a screwdriver.

# Assembly Instructions

## Step 19

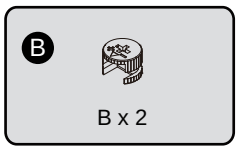


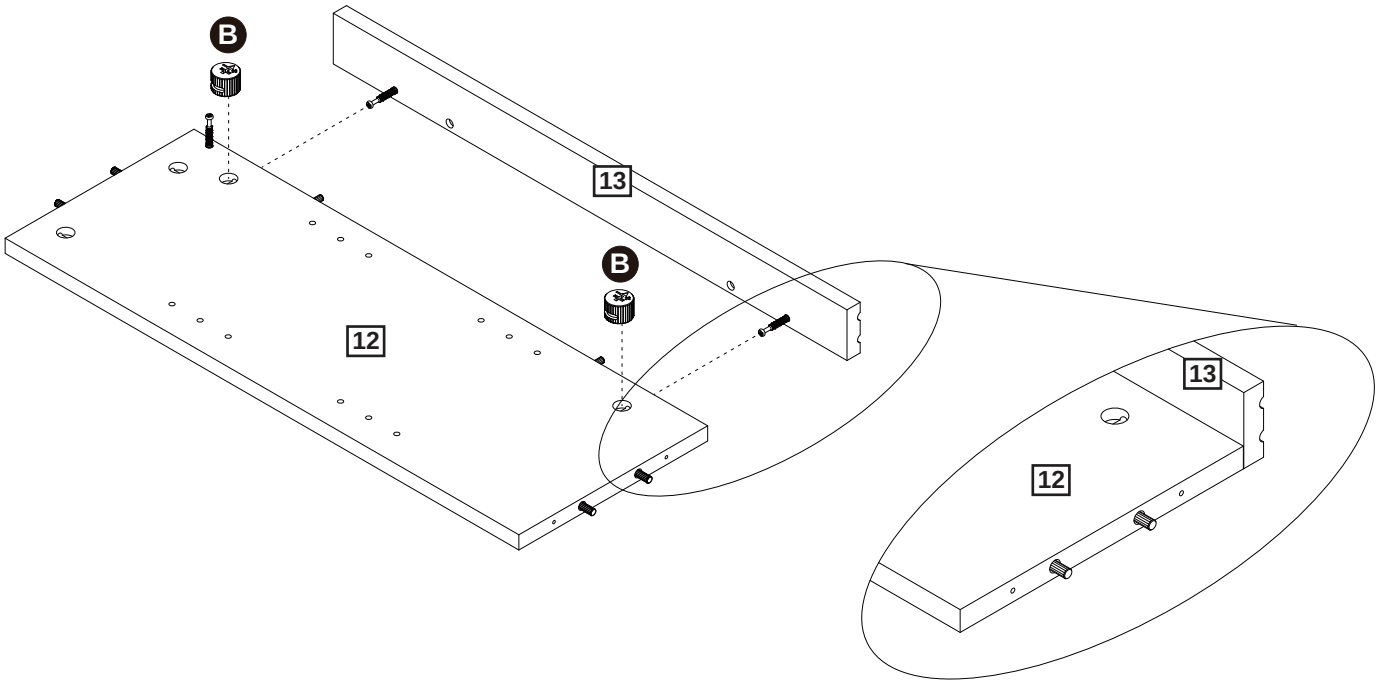


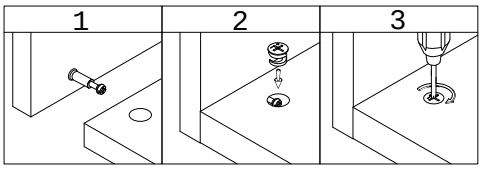


Attach part (13) to part (12), then insert and secure cam lock (B) to part (12) to lock it .

## Step 20

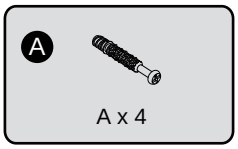


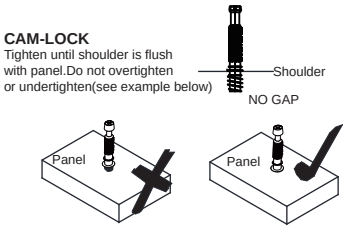


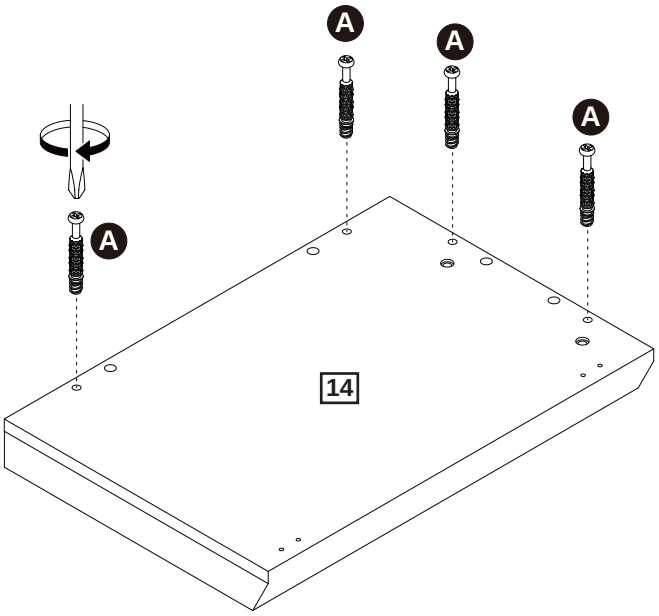


Attach cam bolt (A) to part (14) with a screwdriver.

# Assembly Instructions

## Step 21

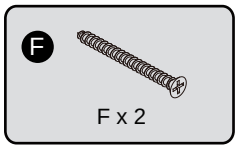


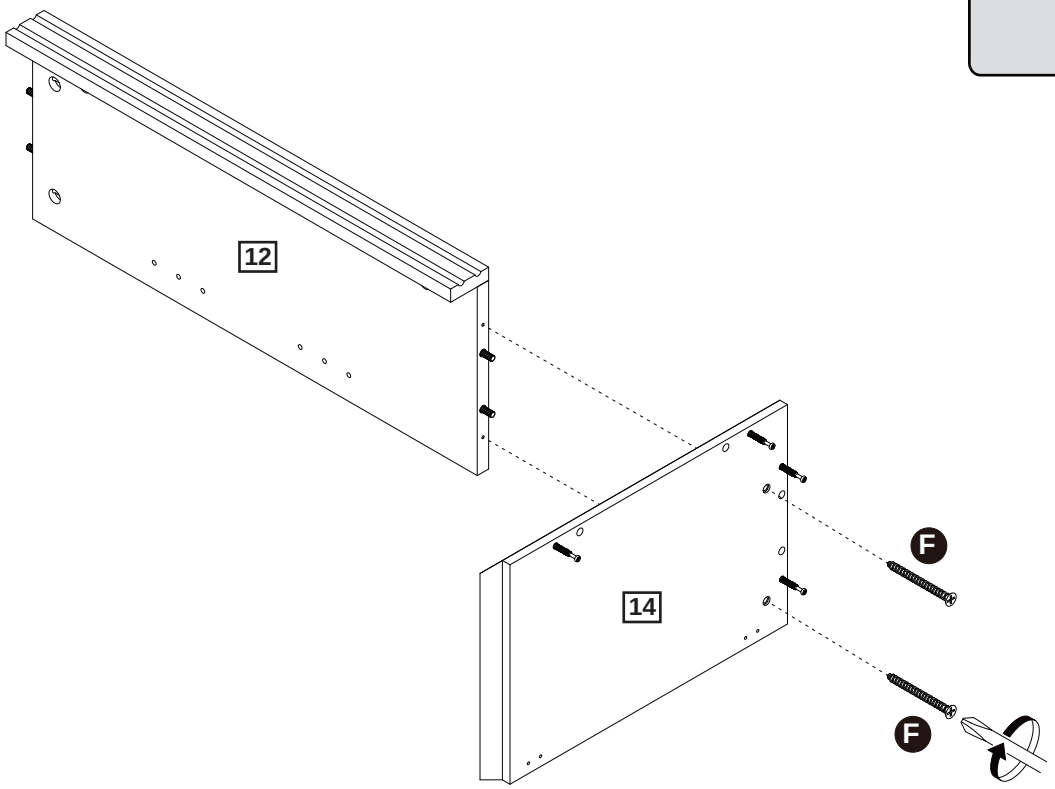


Attach part (12) to part (14) using screw (F) with a screwdriver.

## Step 22

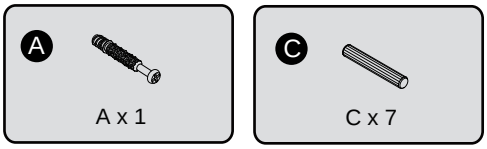


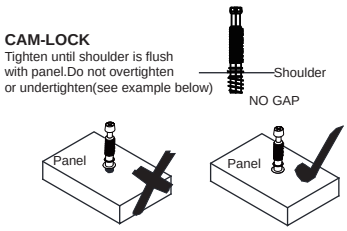


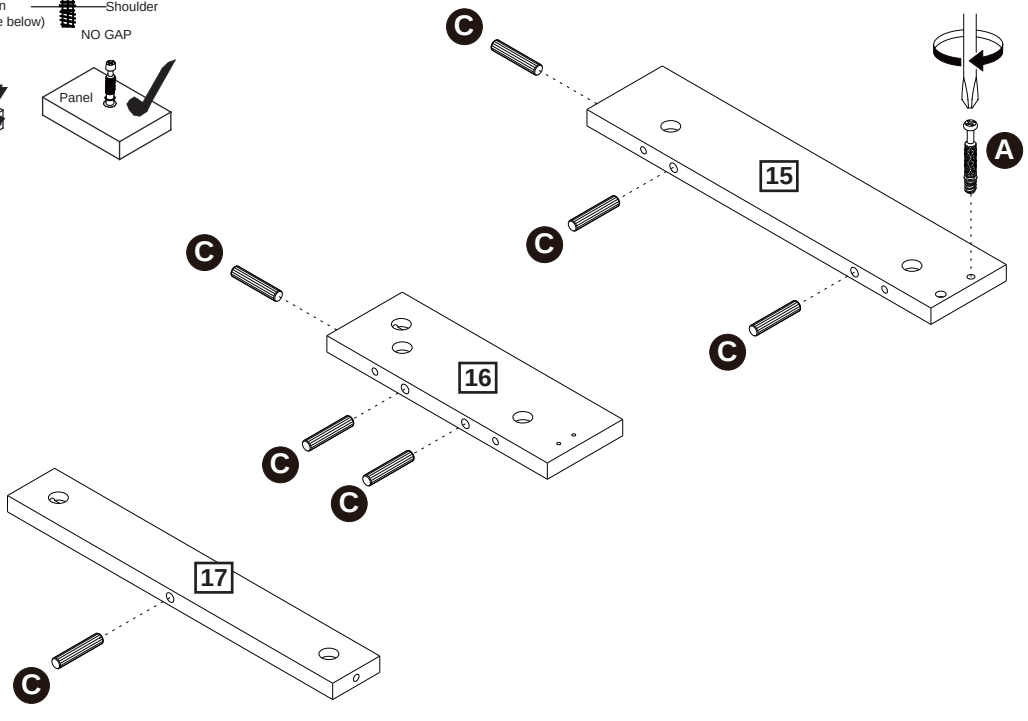


Attach cam bolt (A) to part (15) with a screwdriver.
Insert wooden dowel (C) into part (15, 16, 17).

# Assembly Instructions

## Step 23

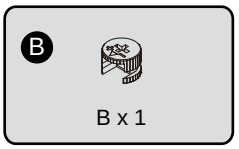


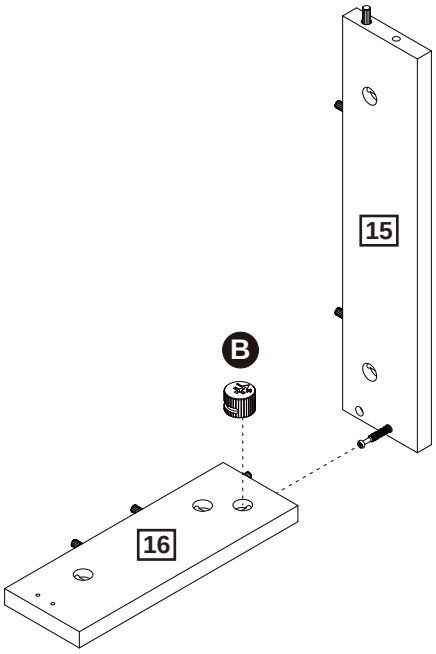


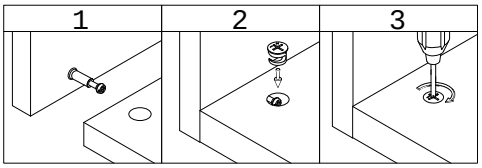


Attach part (15) to part (16), then insert and secure cam lock (B) to part (16) to lock it .

## Step 24

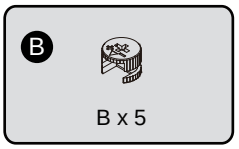


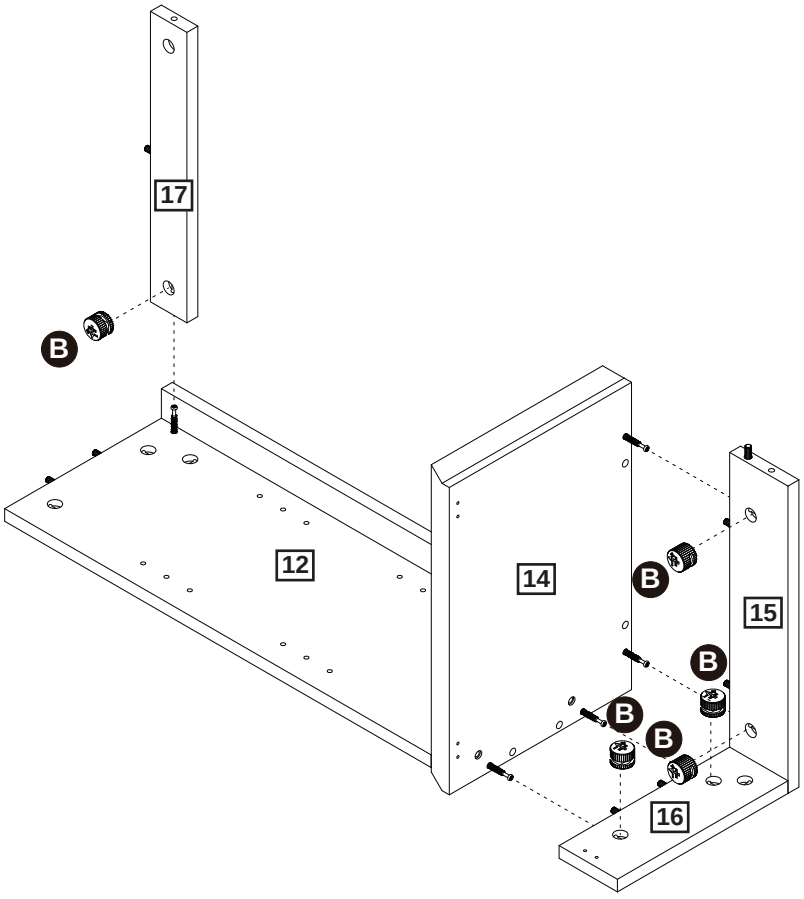


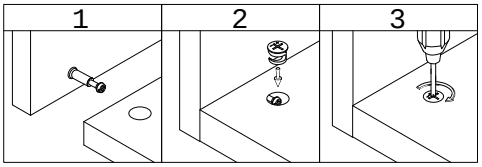


Attach part (17) to part (12), then insert and secure cam lock (B) to part (17) to lock it .
Attach part (15, 16) to part (14), then insert and secure cam lock (B) to part (15, 16) to lock it .

# Assembly Instructions

## Step 25

**CAM-LOCK**
Tighten until shoulder is flush with panel.Do not overtighten or undertighten(see example below)

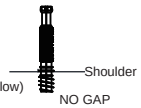


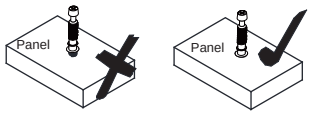








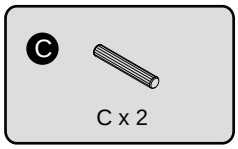


Note: LED strip lights, mounting brackets and screws are in the box of fireplace, NOT in the box of TV stand.

Attach cam bolt (A) to part (18) with a screwdriver.
Insert wooden dowel (C) into part (18).
Attach LED strip light to part (18) using mounting brackets and screws.

## Step 26

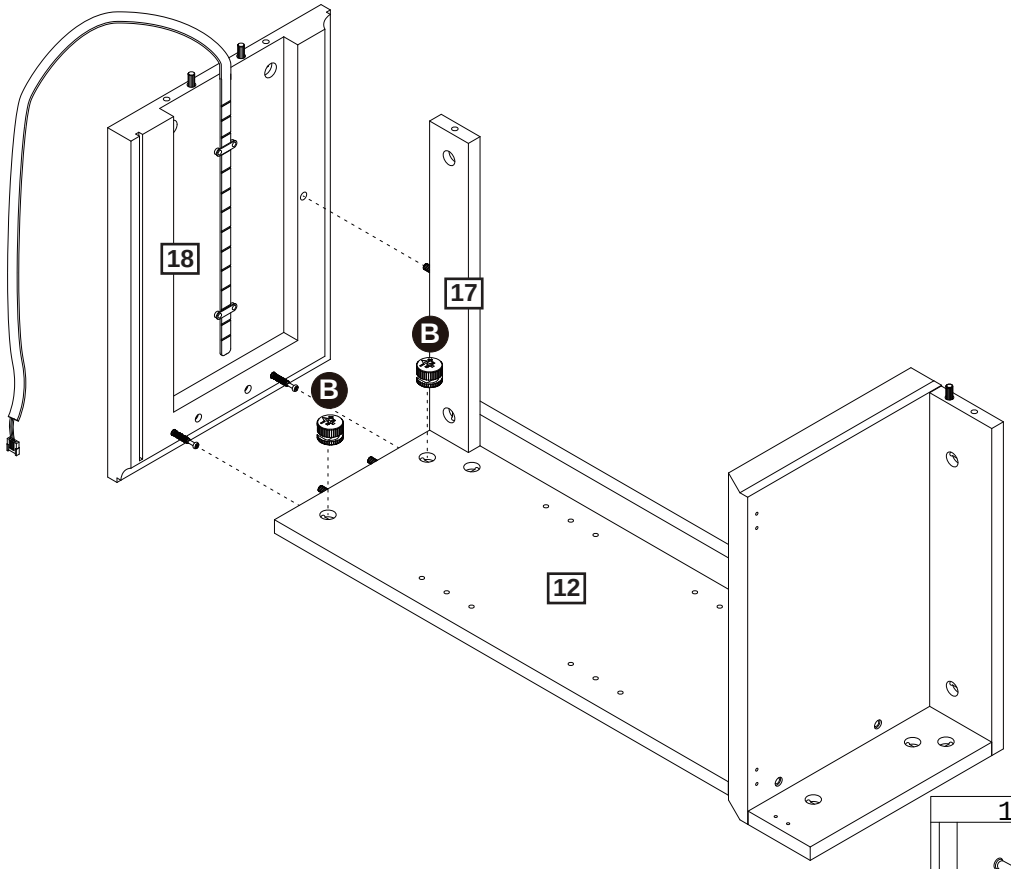


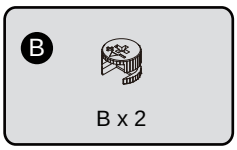


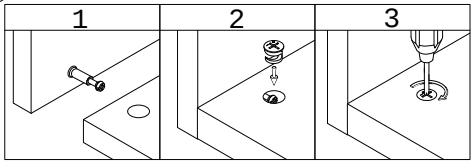


Attach part (18) to part (12, 17), then insert and secure cam lock (B) to part (12) to lock it .

# Assembly Instructions

## Step 27

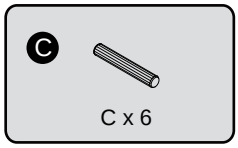


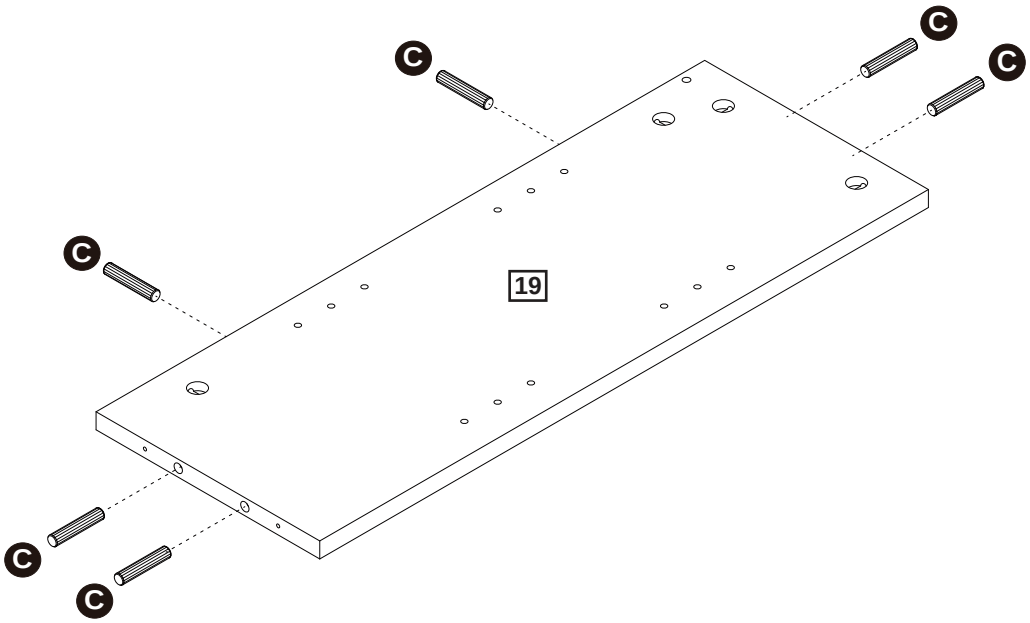


Insert wooden dowel (C) into part (19).

## Step 28

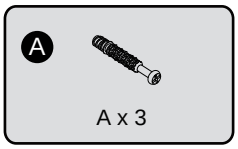


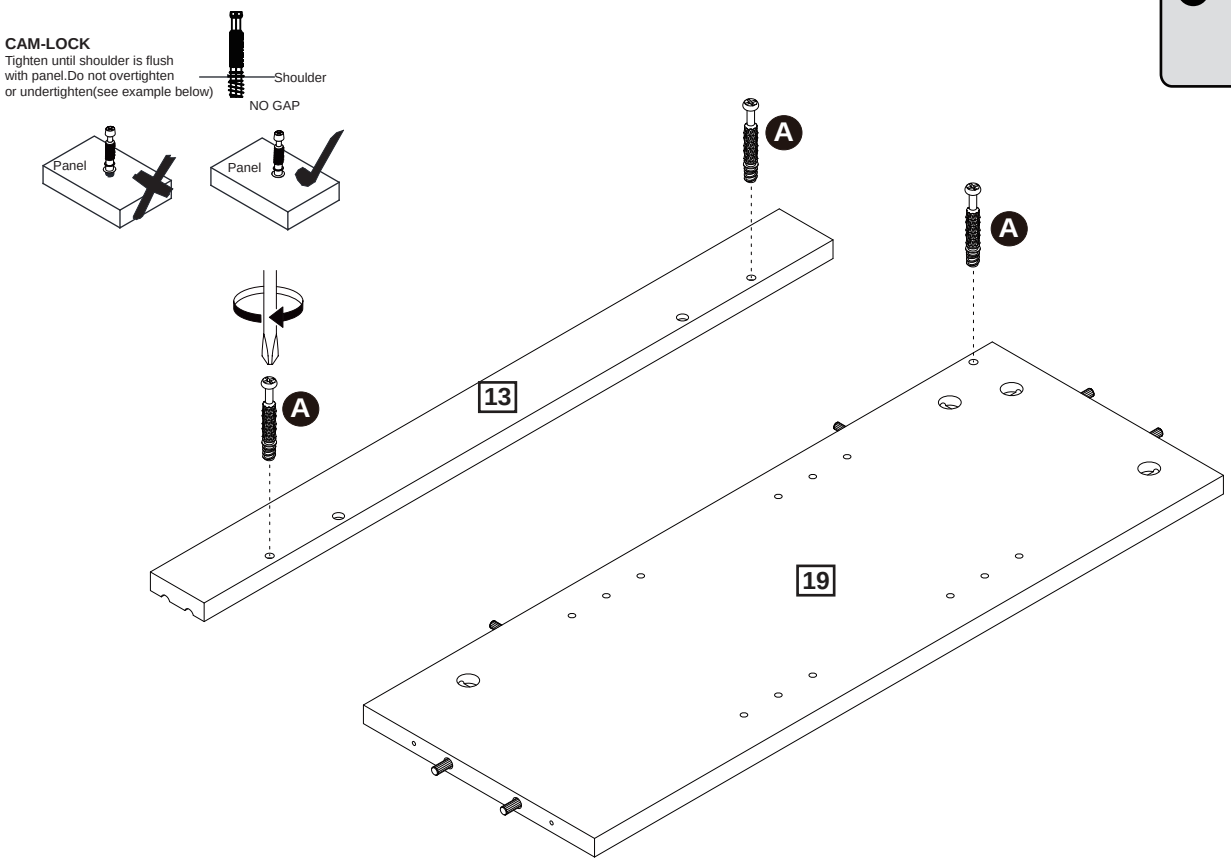


Attach cam bolt (A) to part (13, 19) with a screwdriver.

# Assembly Instructions

## Step 29

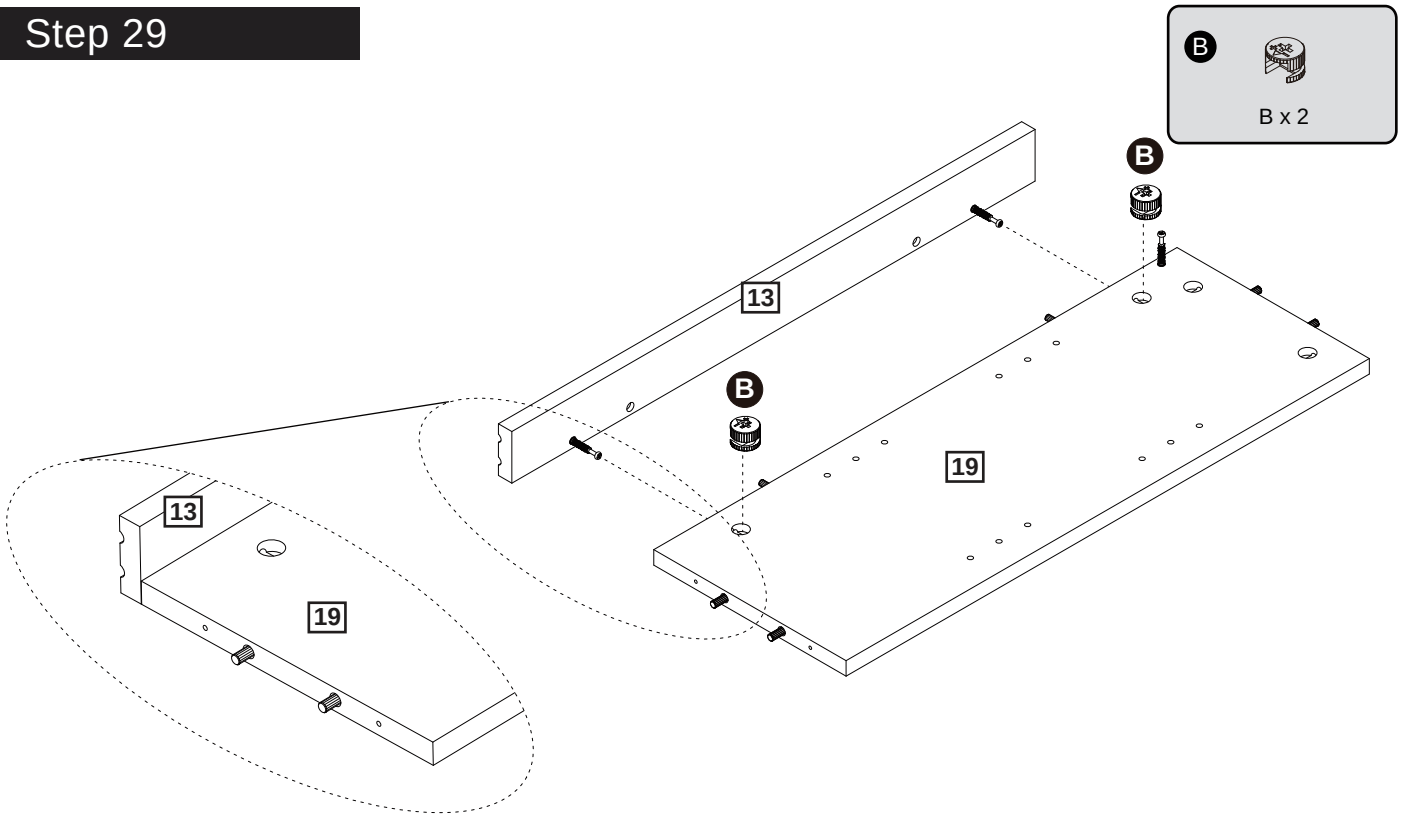


Attach part (13) to part (19), then insert and secure cam lock (B) to part (19) to lock it .

## Step 30

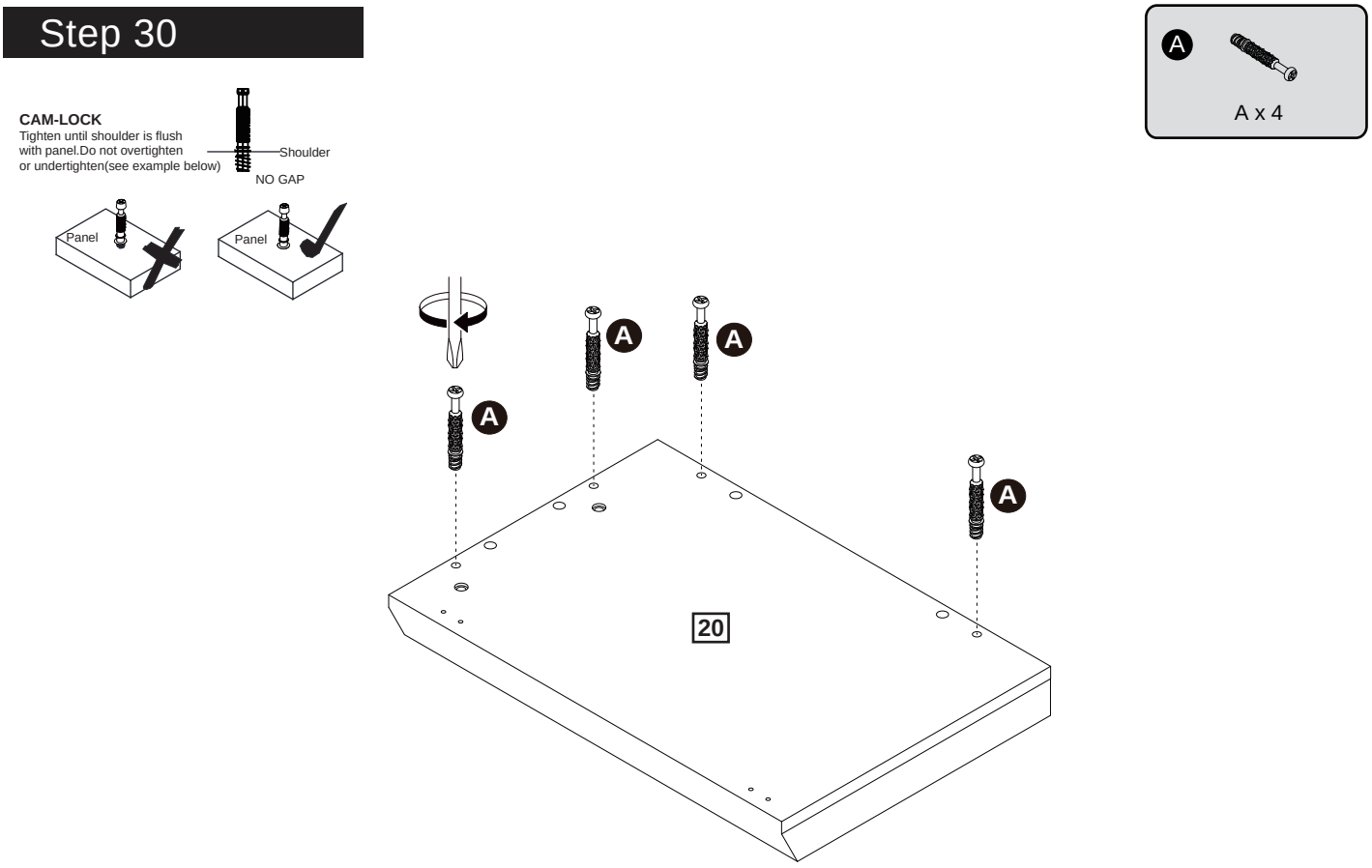


Attach cam bolt (A) to part (20) with a screwdriver.

# Assembly Instructions

## Step 31

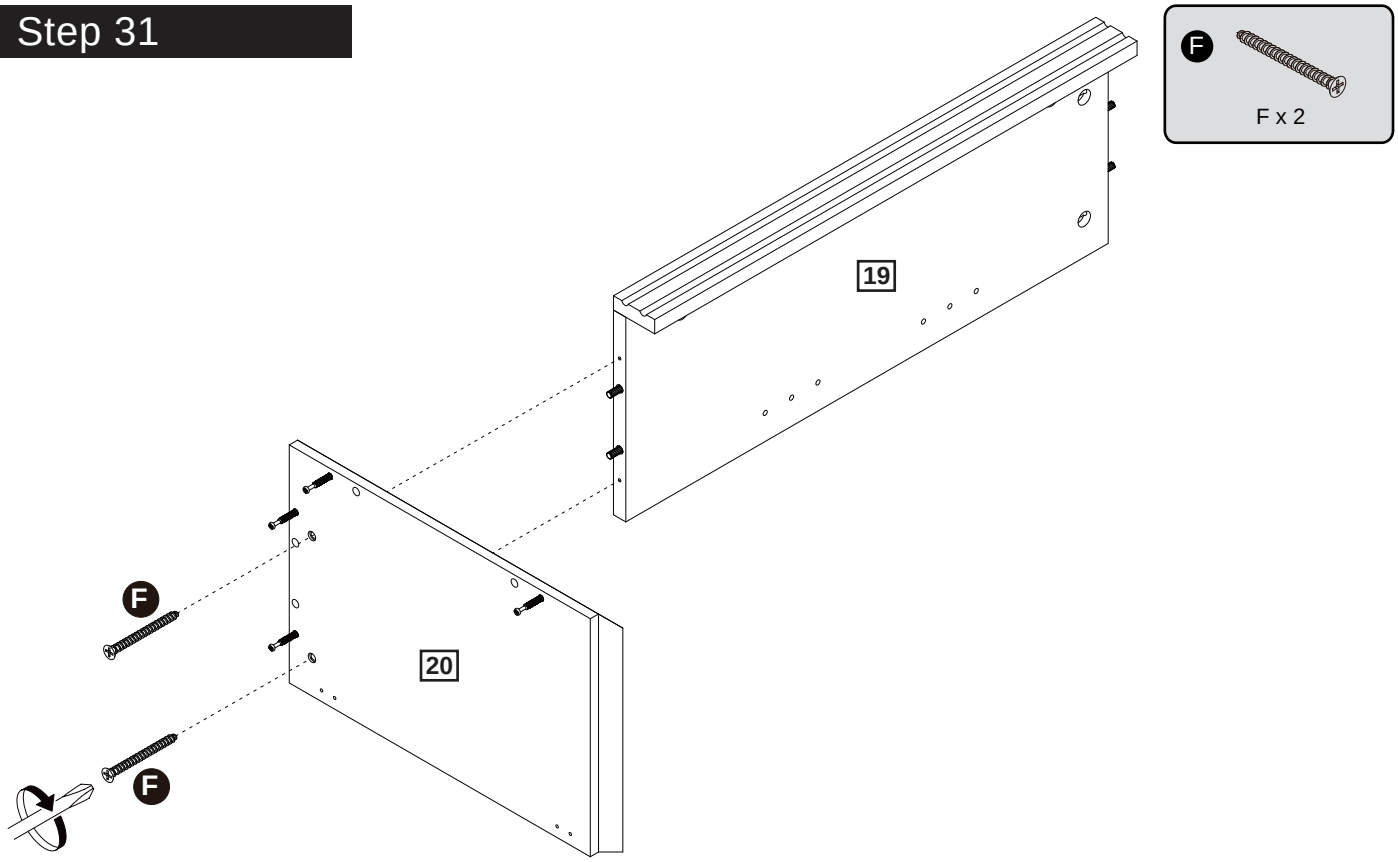


Attach part (20) to part (19) using screw (F) with a screwdriver.

## Step 32

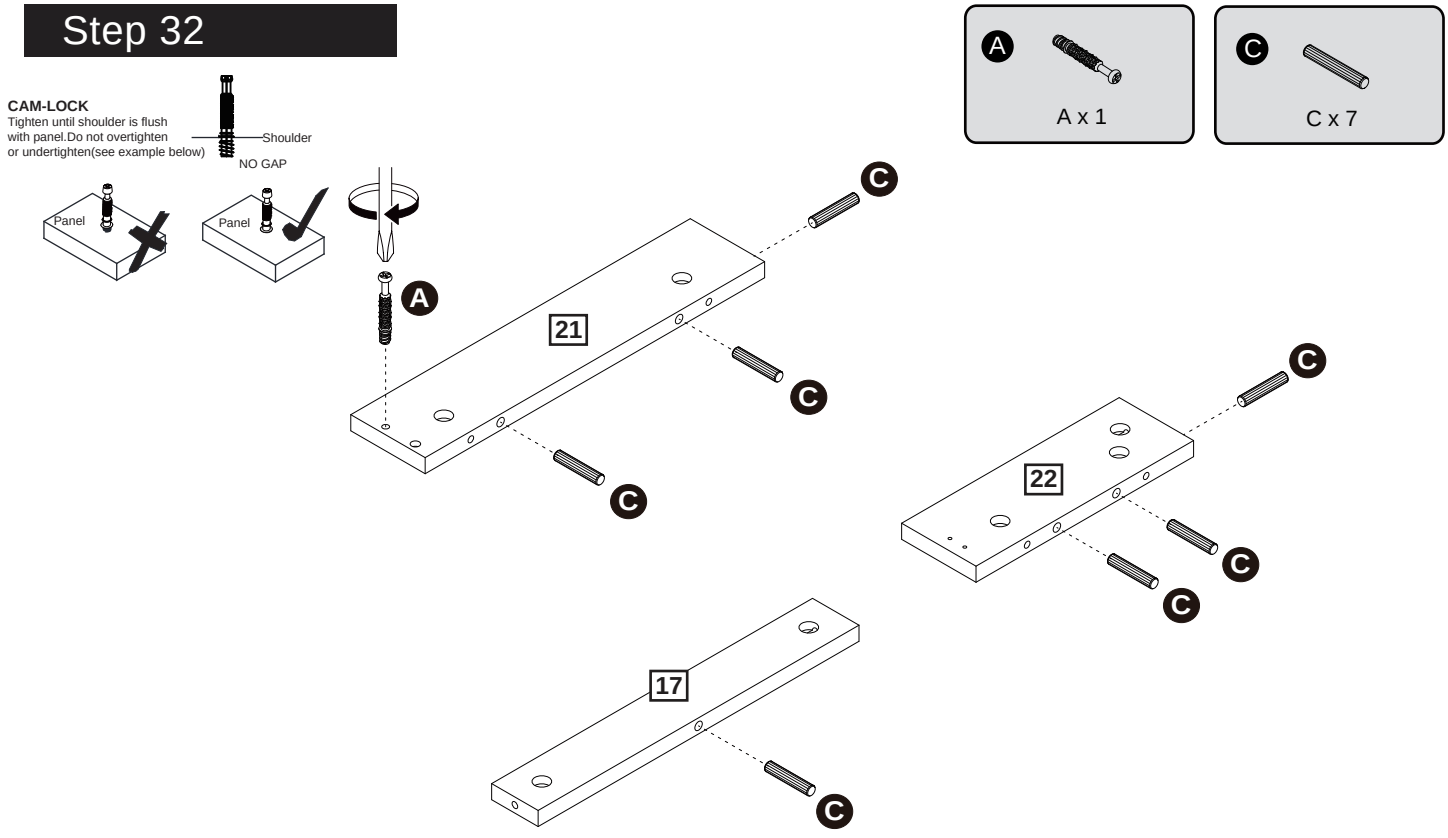


Attach cam bolt (A) to part (21) with a screwdriver.
Insert wooden dowel (C) into part (17, 21, 22).

# Assembly Instructions

## Step 33

B x 1

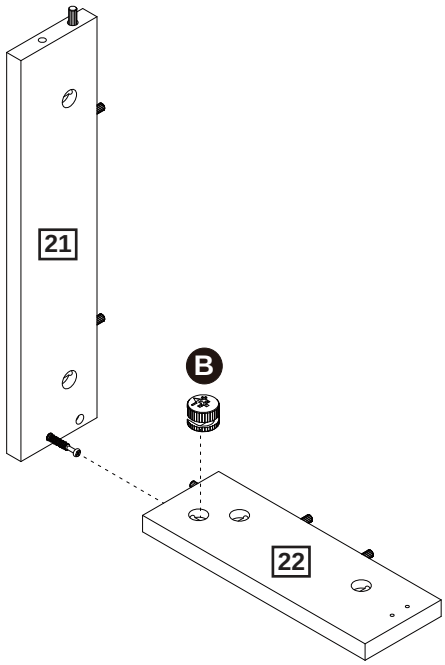


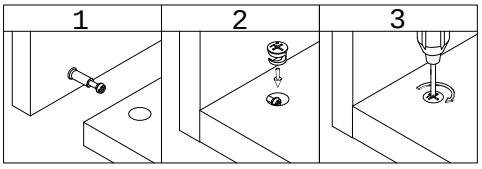


Attach part (21) to part (22), then insert and secure cam lock (B) to part (22) to lock it .

## Step 34

B x 5

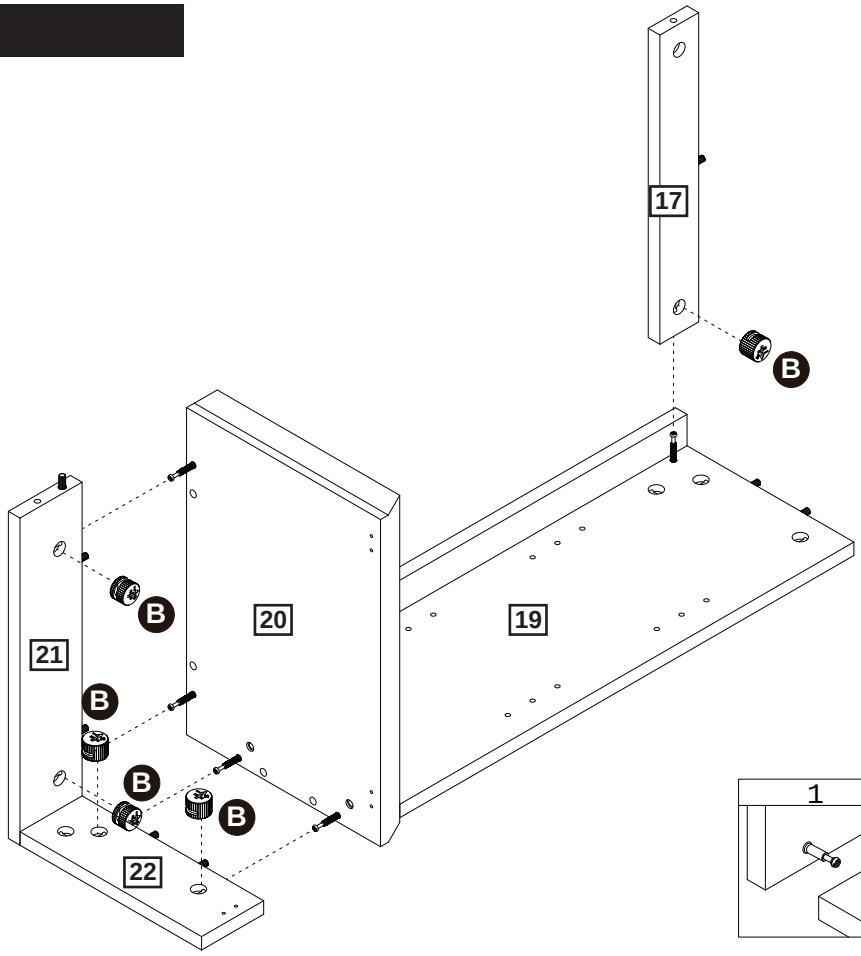


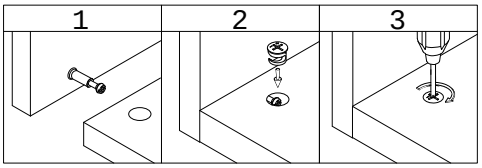


Attach part (17) to part (19), then insert and secure cam lock (B) to part (17) to lock it .
Attach part (21, 22) to part (20), then insert and secure cam lock (B) to part (21, 22) to lock it .

# Assembly Instructions

## Step 35

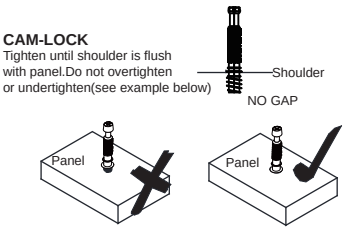


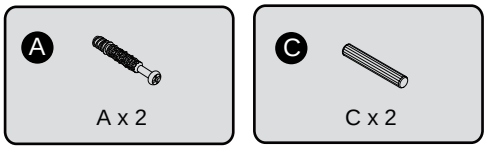


Note: LED strip lights, mounting brackets and screws are in the box of fireplace, NOT in the box of TV stand.




Attach cam bolt (A) to part (23) with a screwdriver.
Insert wooden dowel (C) into part (23).
Attach LED strip light to part (23) using mounting brackets and screws.

## Step 36

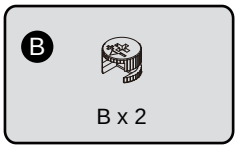


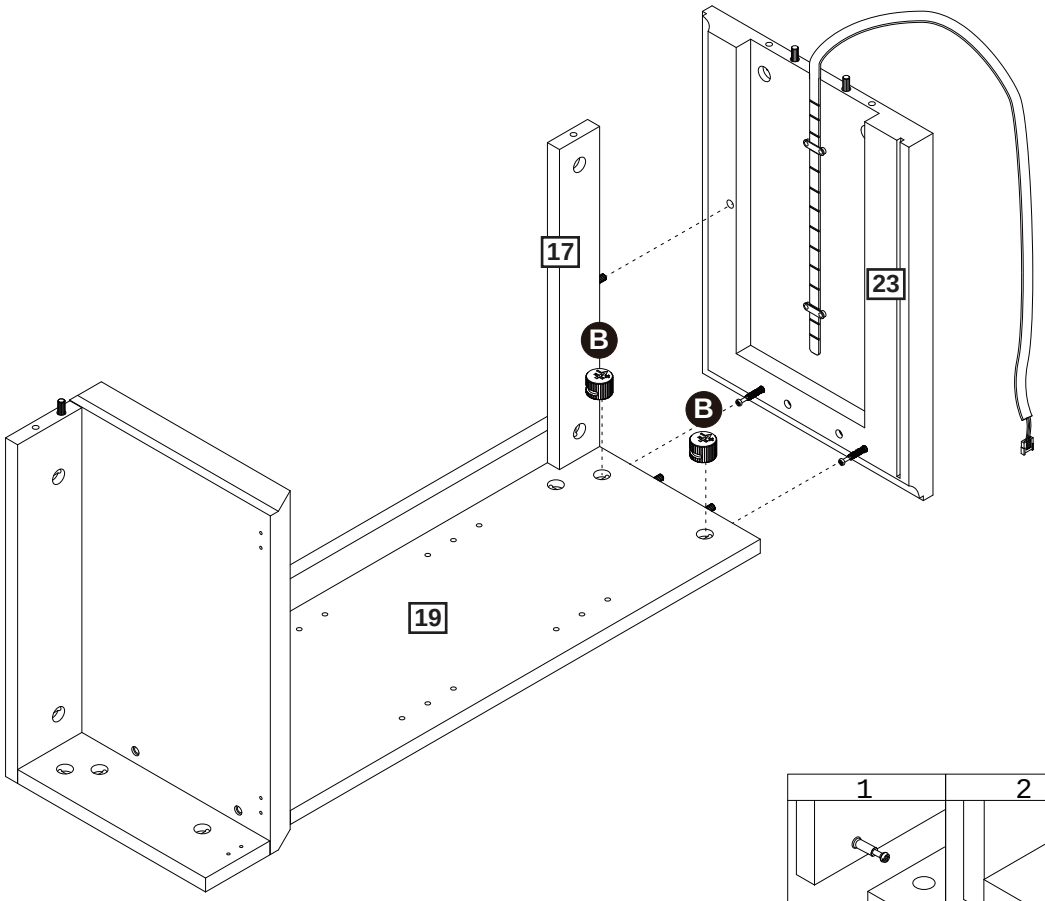


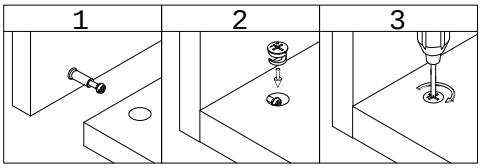


Attach part (23) to part (17, 19), then insert and secure cam lock (B) to part (19) to lock it .

# Assembly Instructions

## Step 37

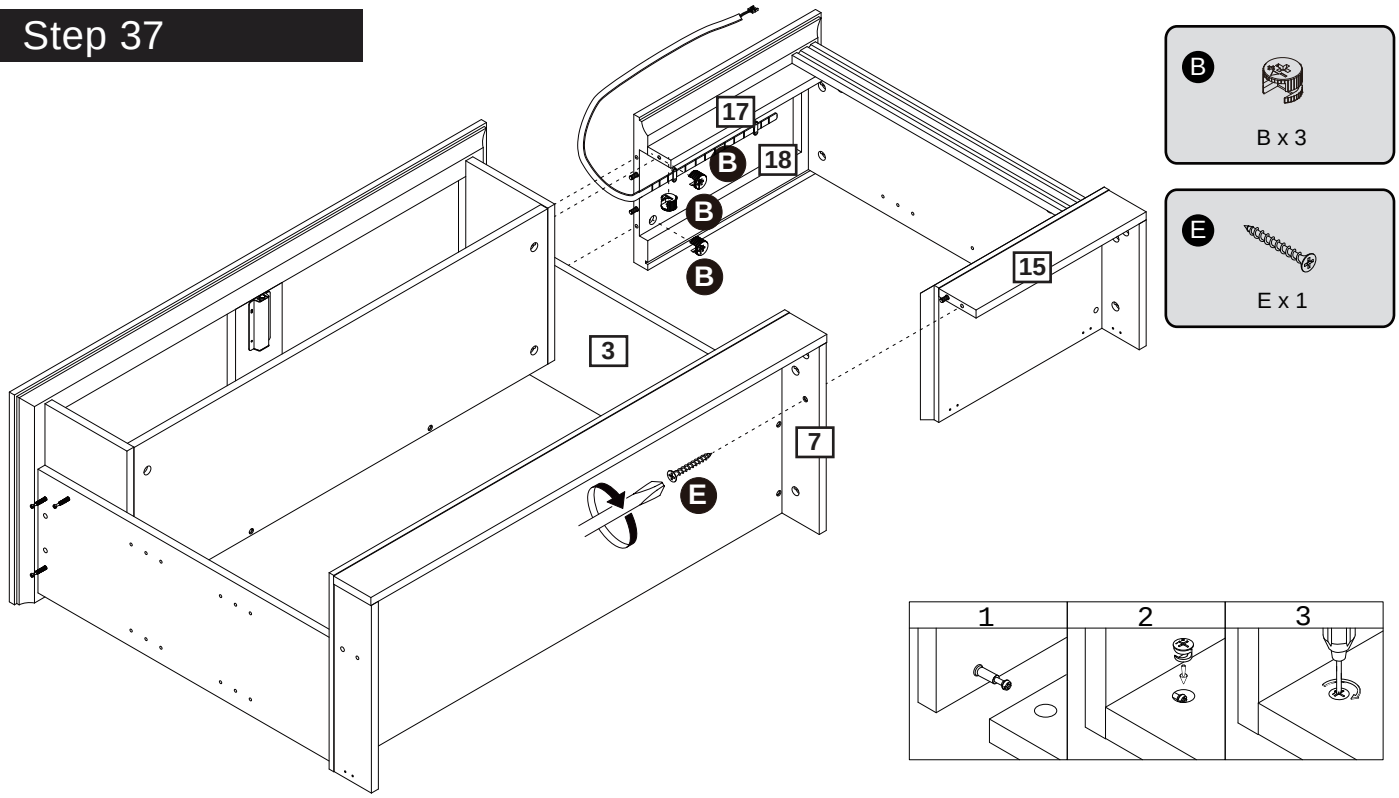


Attach part (17, 18) to part (3), then insert and secure cam lock (B) to part (17, 18) to lock it .
Attach part (15) to part (7) using screw (E) with a screwdriver.

## Step 38

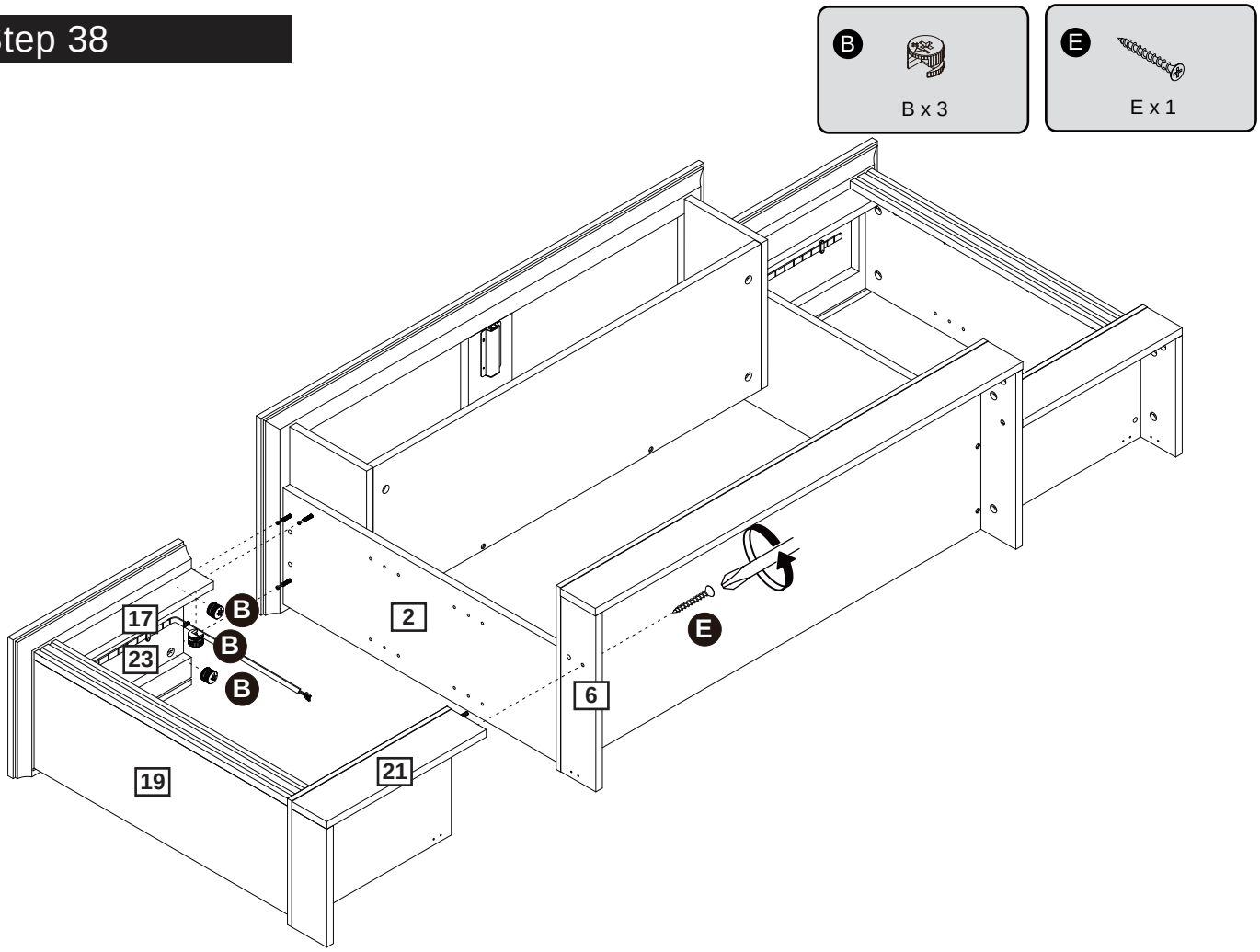


Attach part (17, 23) to part (2), then insert and secure cam lock (B) to part (17, 23) to lock it .
Attach part (21) to part (6) using screw (E) with a screwdriver.

# Assembly Instructions

## Step 39

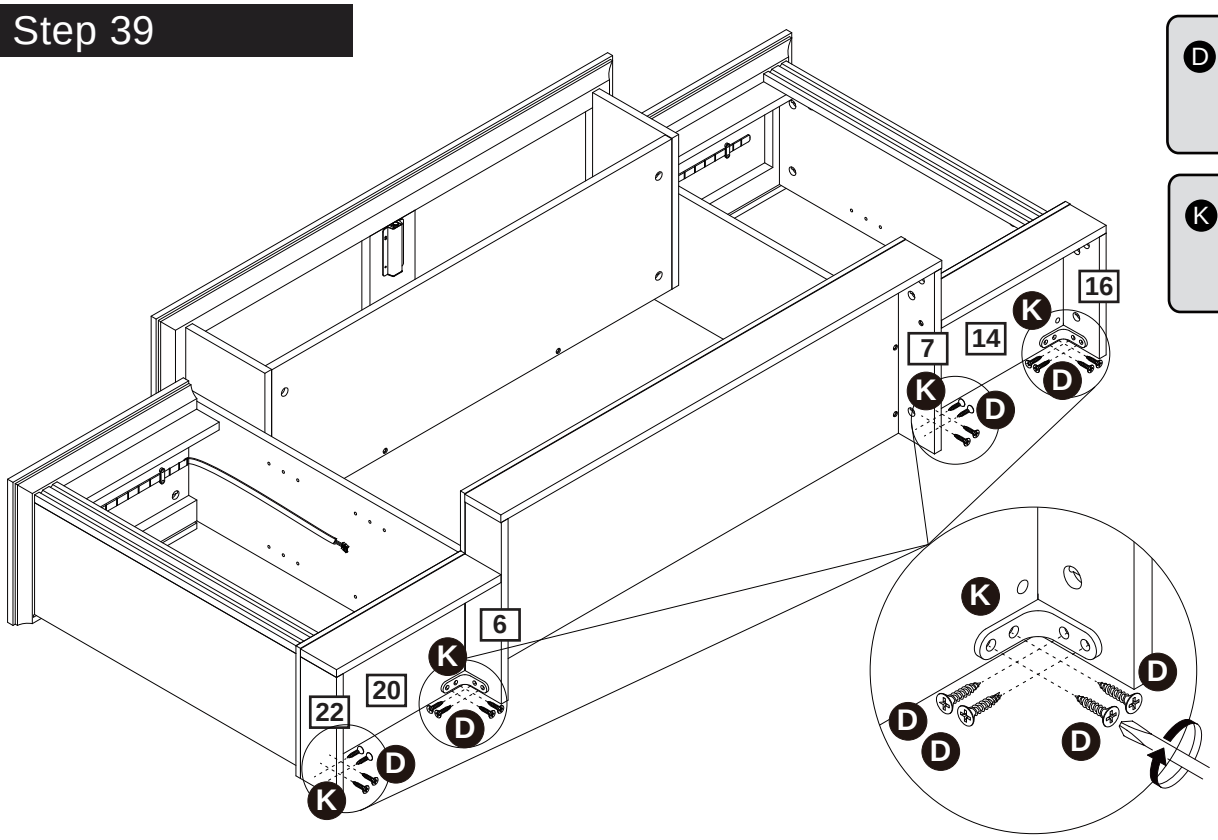


Use L shape bracke (K) and screw (D) to secure part (6, 22) to part (20), and then secure part (7, 16) to part (14).

## Step 40

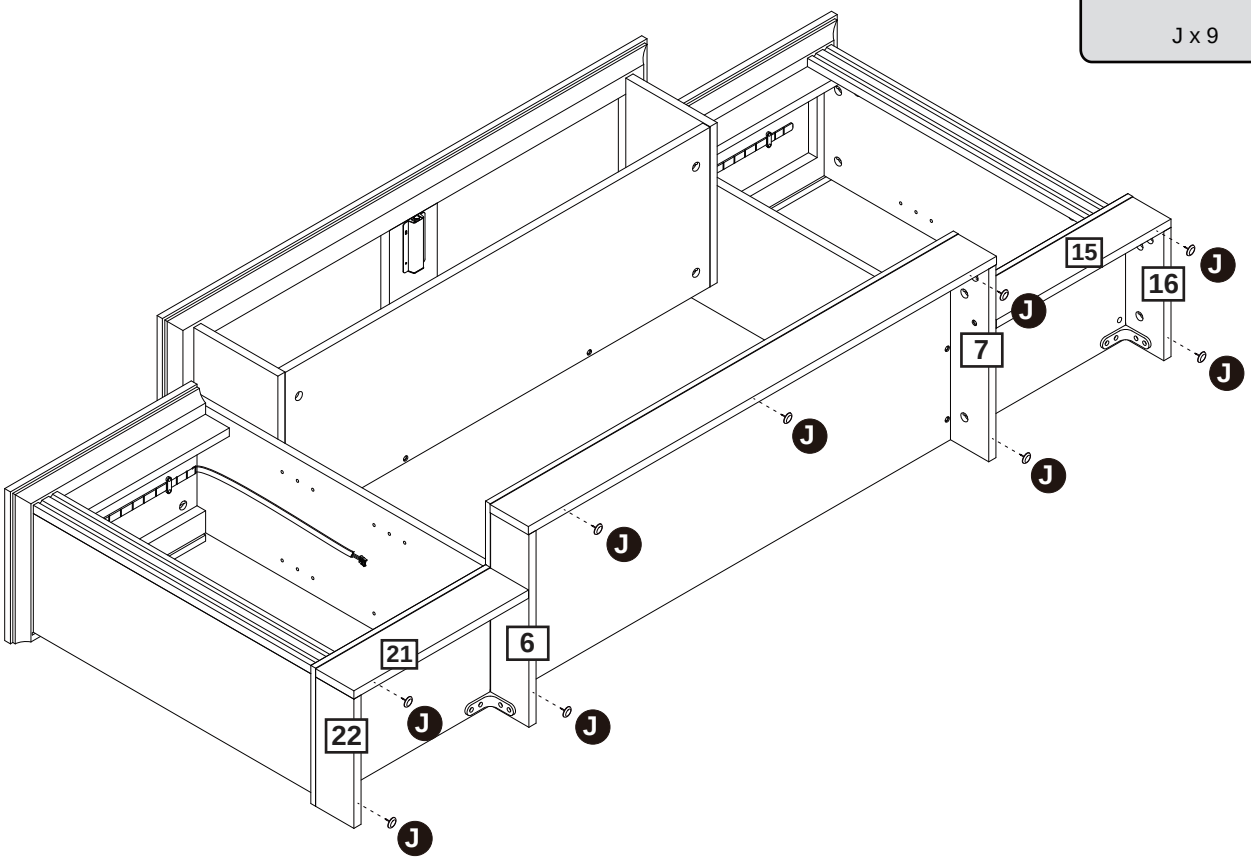


Insert protective foot (J) to the panels.

# Assembly Instructions

## Step 41

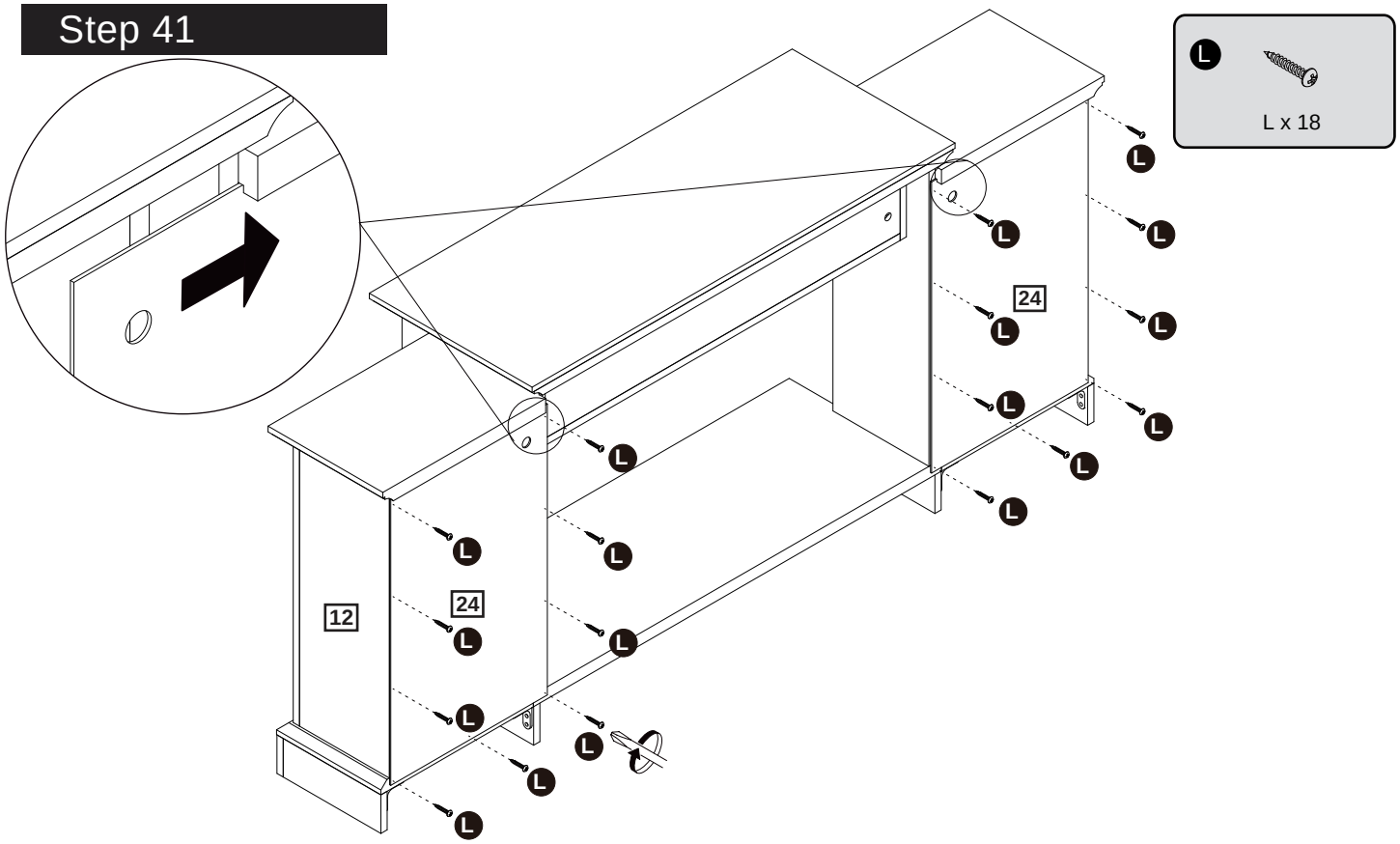


Slide the back panel (24) into grooves, then secure back panel (24) using screw (L) with a screwdriver.

## Step 42

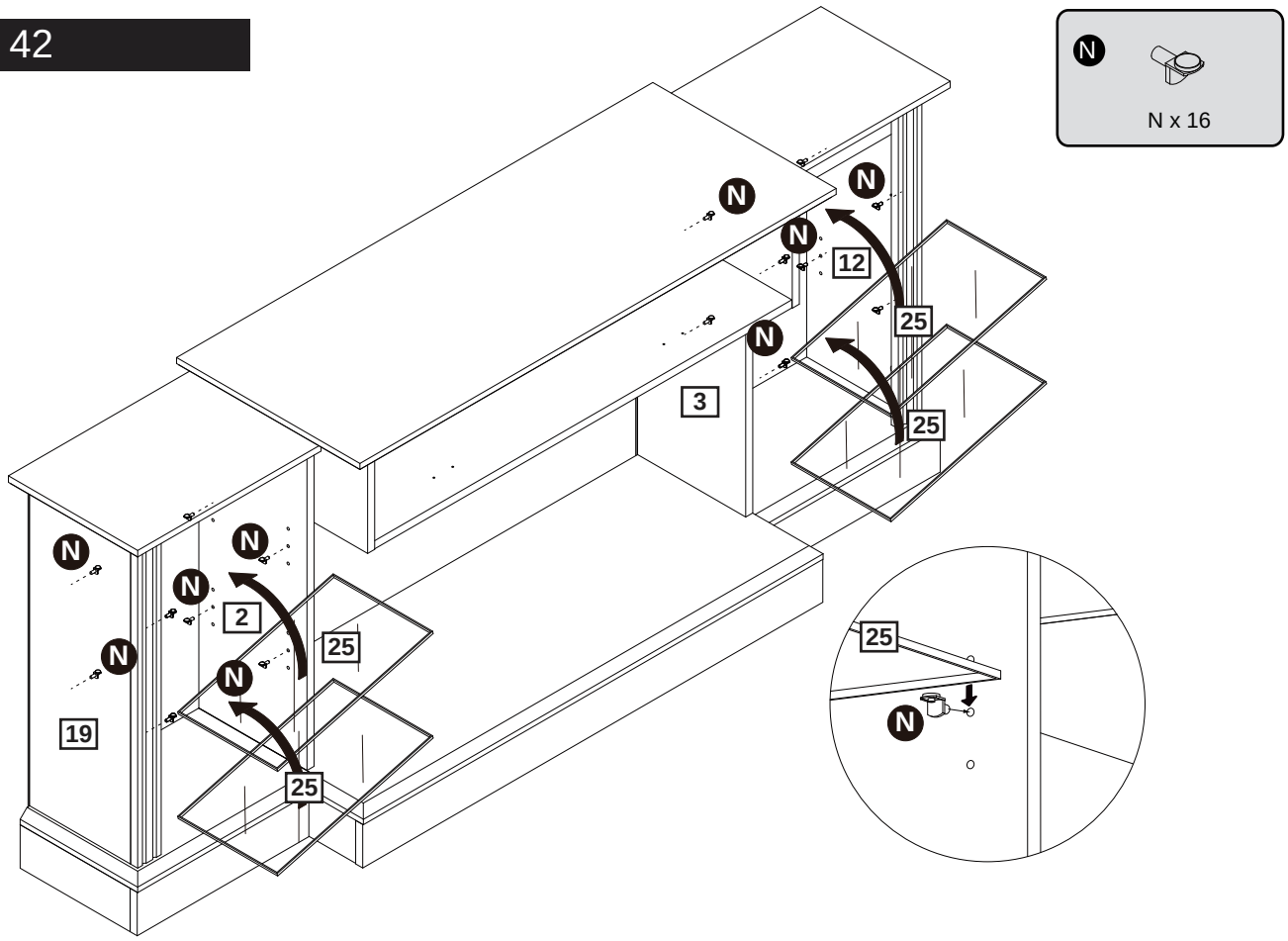


Insert shelf support pin (N) into part (2, 3, 12, 19).
Place part (25) on the top of support pins.

# Assembly Instructions

## Step 43

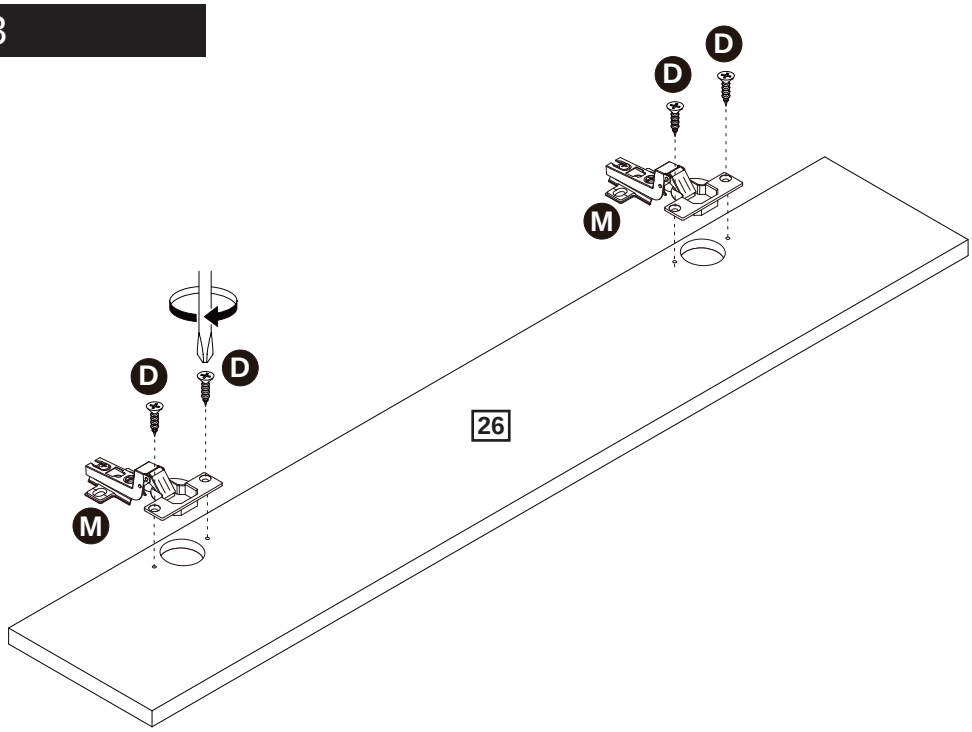


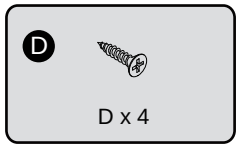


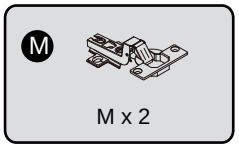


Use screw (D) to secure hinge (M) to part (26).

## Step 44

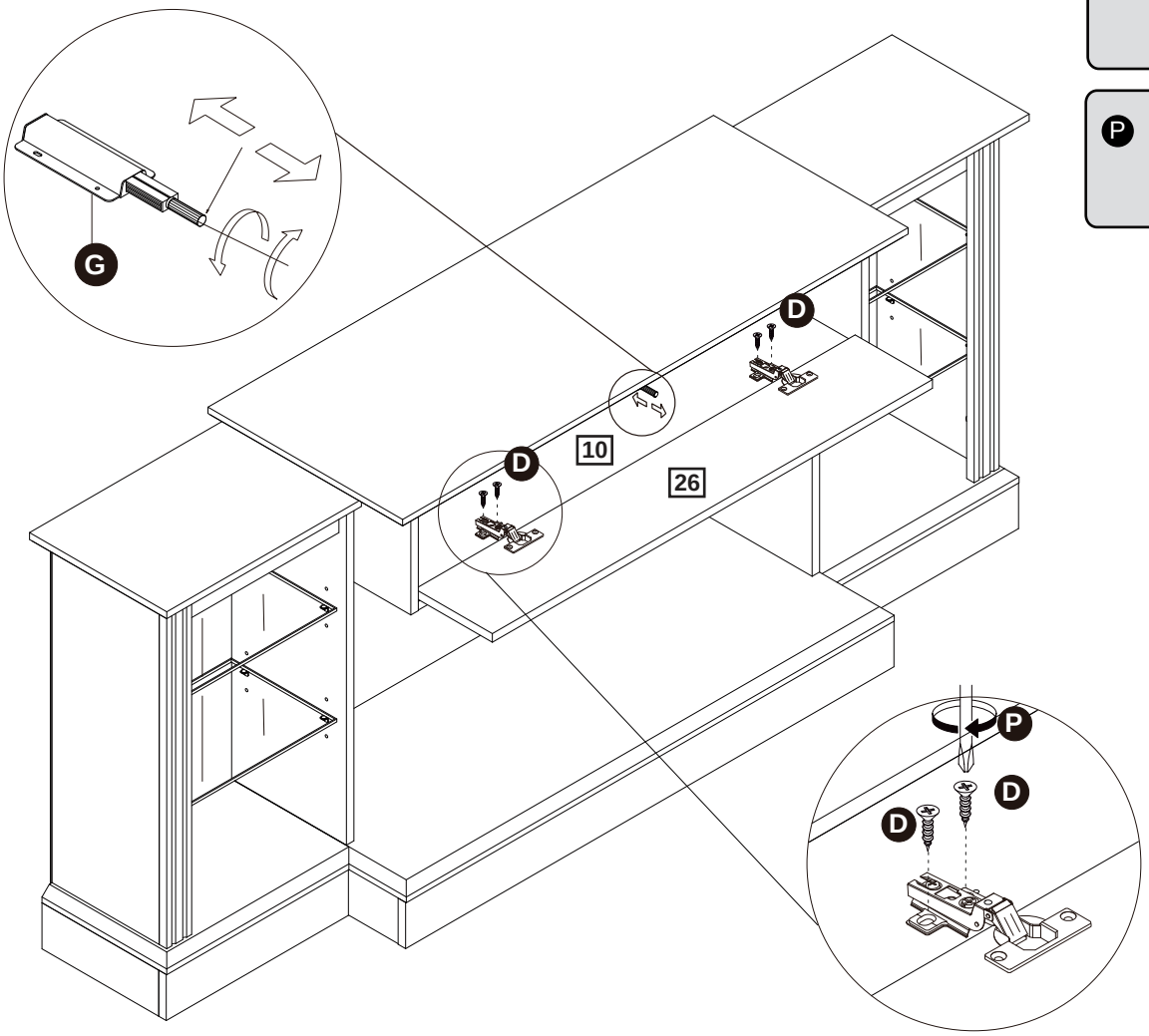


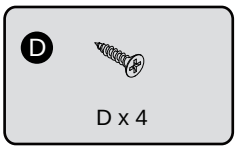


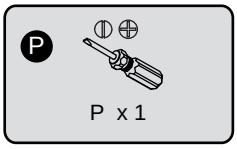


Use screw (D) to secure hinge (M) to part (10).
Adjust push-open latches so that the door can close tightly.

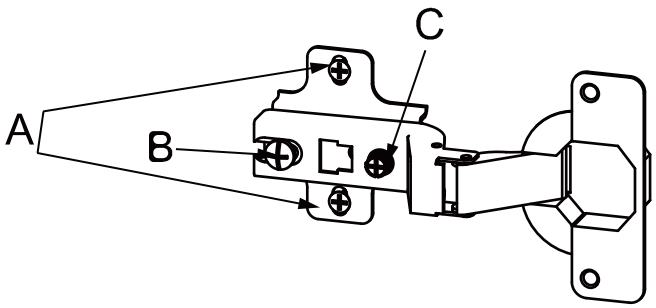


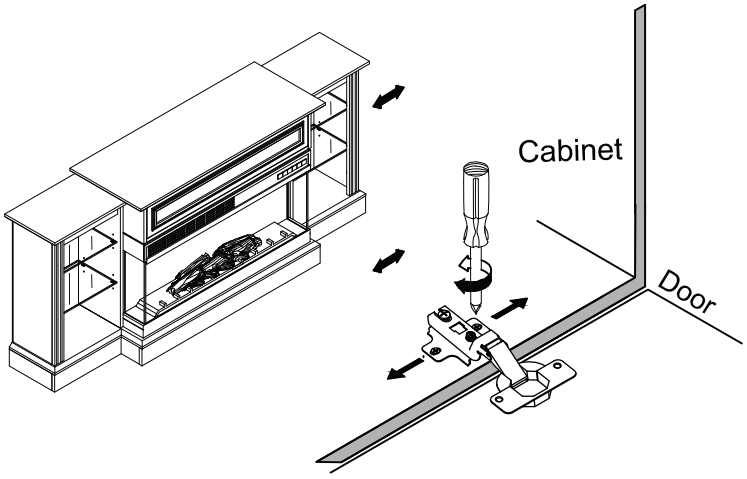


**To adjust side ways.**
Loosen the two screws "A" on both hinges. They are usually in slotted holes which allows you to adjust to the left or right by a few mm. Then tighten back up.

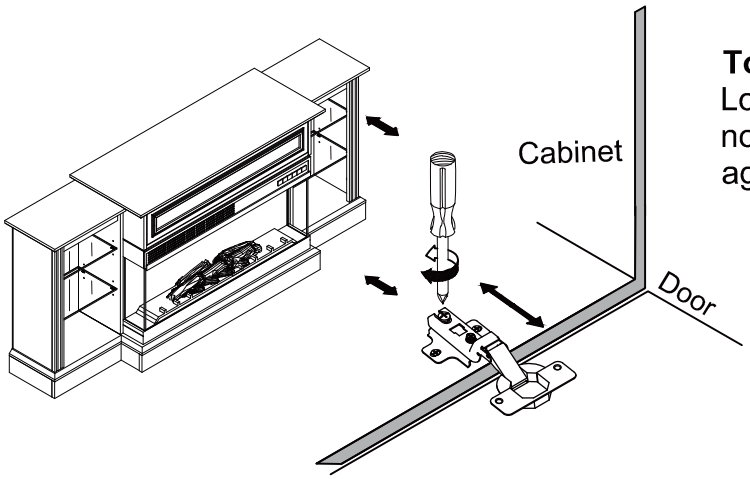


**To adjust depth.**
Loosen screw "B" and adjust door, if the door can not be adjusted, please loosen screw "C", then try again. Tighten screw "B" and "C".

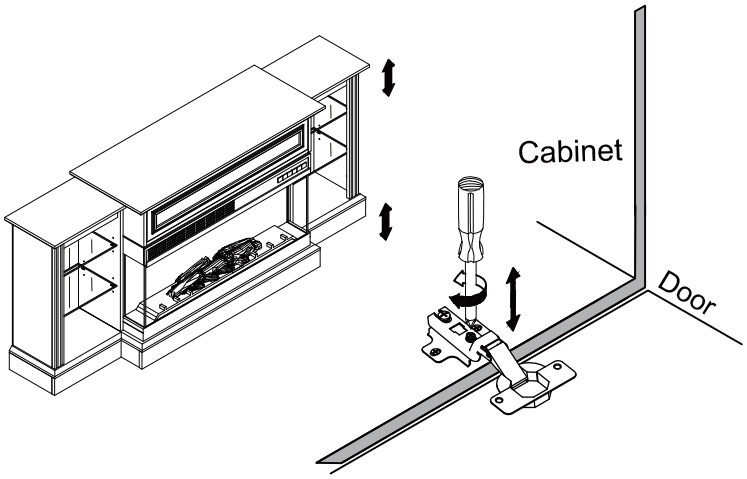


**To adjust the vertical height.**
Turning the screw "C" on BOTH hinges on each door.

# Assembly Instructions

## Step 45

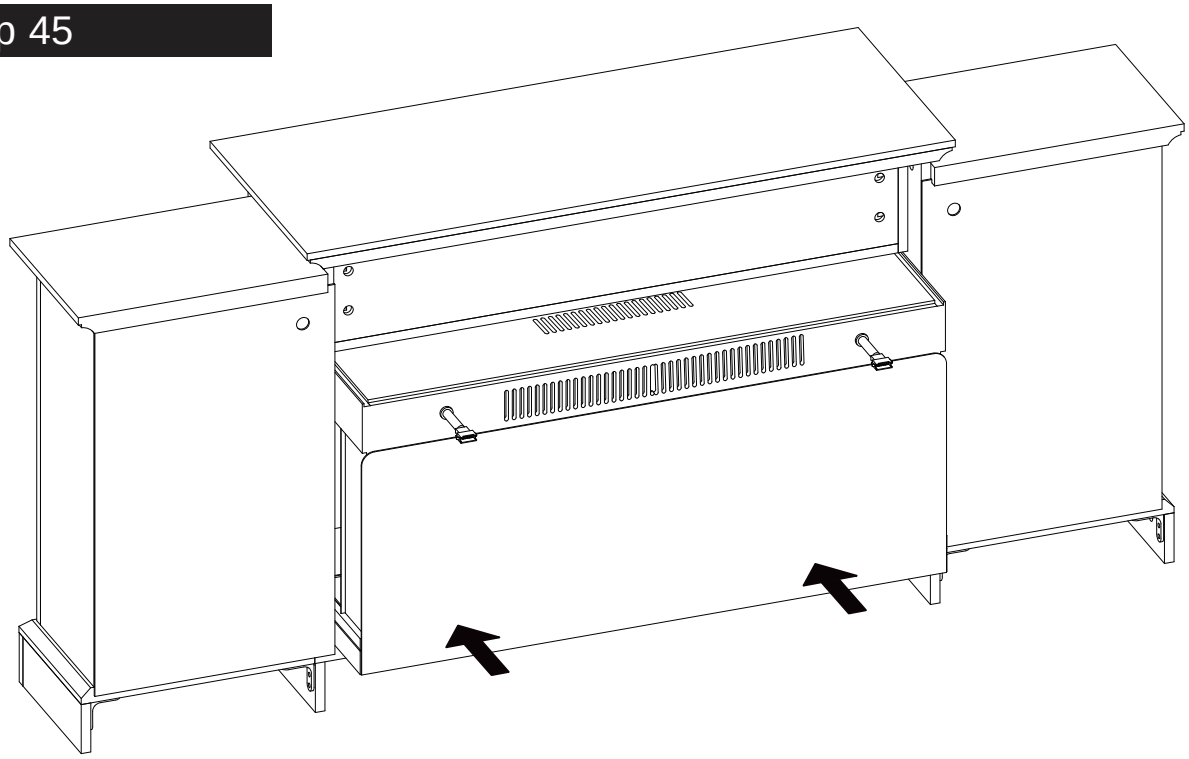

Insert the fireplace from the back of the stand.

## Step 46

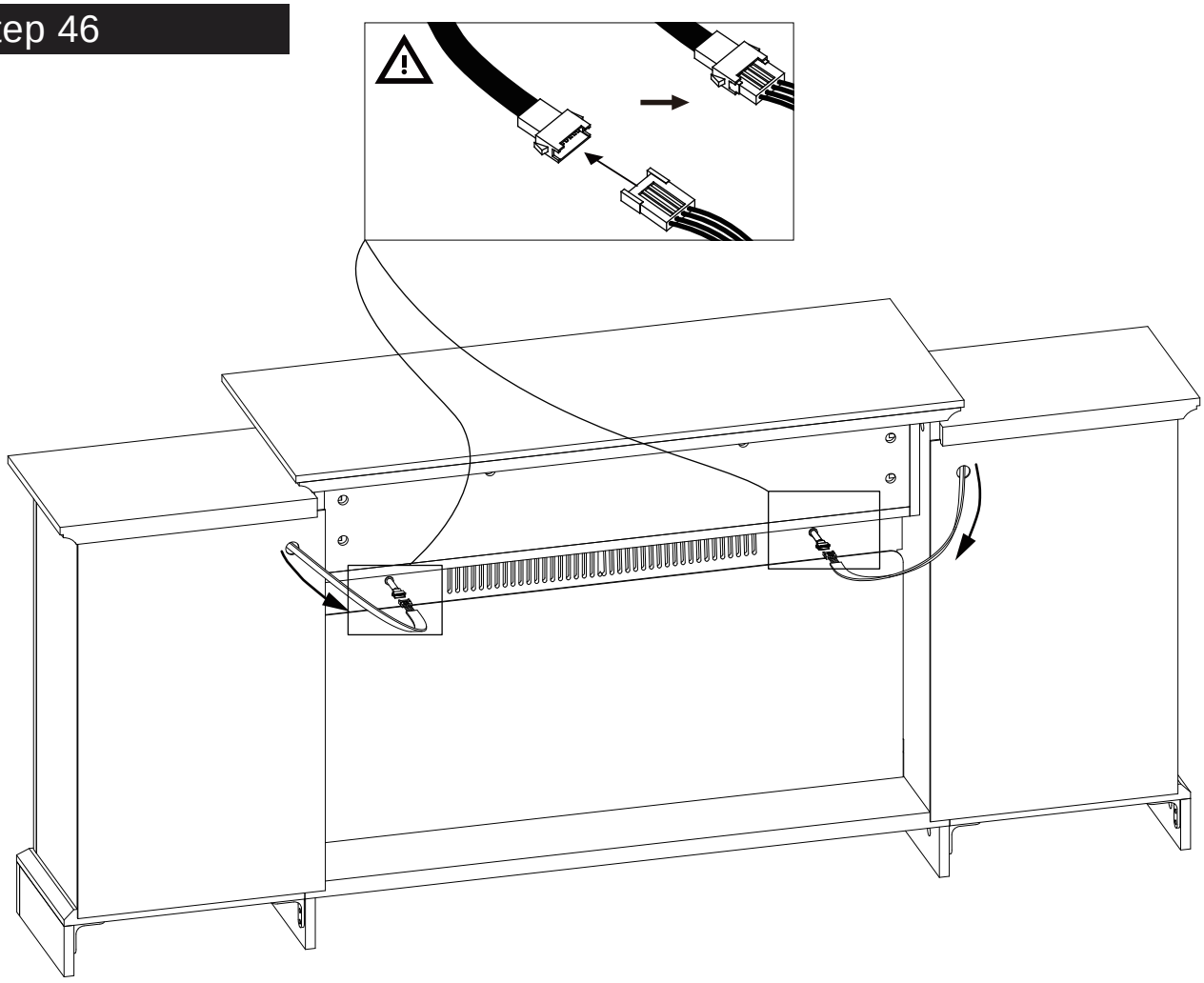

Get the LED light strips through the cable holes, then connect with the power cables.

# Assembly Instructions

## Step 47

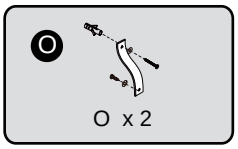


**The unit is floor standing, but it is recommended that the unit is secured to the wall.**

1. Move the unit into desired position.

2. Mark the wall with a suitable scribe the position of the fixing holes.

**Warning:**
Before driling,check wall for hidden pipes and cables.

3. Drill holes and insert 2 x wall plug

4. Attach 2 x Wall Straps to to the top of the unit using 2 x Washers and 2 x Screws



5. Secure the straps to the wall using 2 x Washers and 2 x Screws

*Note:* To hide the straps behind the unit, drill the holes lower than the top of the unit

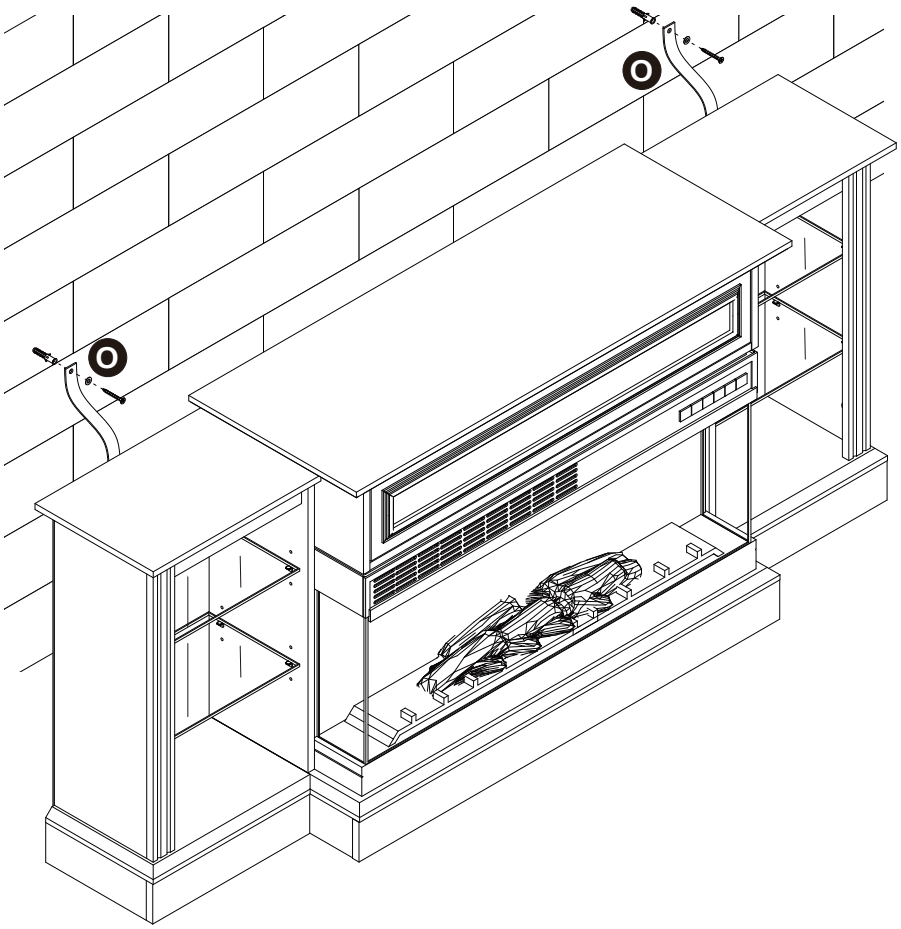

**Assembly is complete.**

# A Guide to Wall Mounting & Fixings

## Important note:

If plastic wall plugs (rawl plugs) are supplied with your product, e.g.:



- these are only suitable for use in masonry walls.

If you are in any doubt about the correct wall plugs for your wall, seek professional advice.

Failure of the product due to using the incorrect fixings is the responsibility of the installer.

## Important: when drilling into walls always check that there are no hidden wires or pipes etc.

Make sure that the screws and wall plugs being used are suitable for **supporting your unit. Consult a qualified tradesperson if you** are unsure.

Hints:

1: General rule: always use a larger screw and wall plug if you are not sure.
2: Ensure you use the recommended drill bit to match the wall plug and hole size.
3: Ensure you drill the hole horizontally; do not force the drill or enlarge the hole.
4: Take extra care when drilling high walls, ceilings and ceramic tiles. Ensure wall plugs are inserted beyond the thickness of the ceramic tiles to avoid the tiles splitting or cracking.
5: Ensure wall plugs are well fitted and are a tight fit in the drilled hole.

## Types of walls

You can use one of the following types of wall plug if your walls are made of brick, breeze block, concrete, stone or wood.

No.1 “General Purpose” wall plug

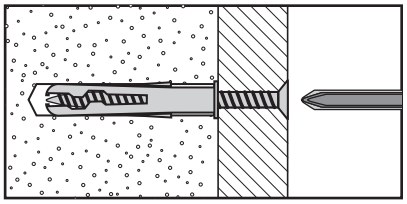

Generally aerated blocks should not be used to support heavy loads, use a specialist fitting in this case. For light loads, general purpose wall plugs can be used.

No.3 “Cavity Fixing” wall plug

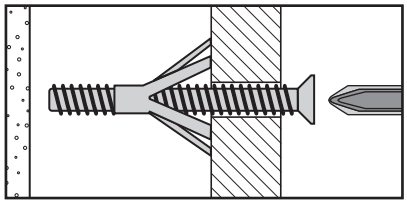

For use with plasterboard partitions or hollow wooden doors.

No.5 “Hammer Fixing” wall plug

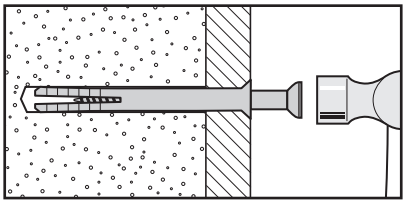

For use with walls stuck with plasterboard. The hammer fixing allows it to be fixed to the wall rather than the plasterboard. Always check the fixing is secure to the retaining wall.

No.2 “ Plasterboard” wall plug

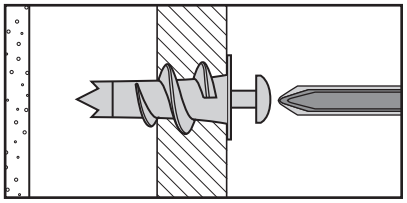

For use when attaching light loads onto plasterboard partitions.

No.4 “ Cavity Fixing – Heavy Duty” wall plug

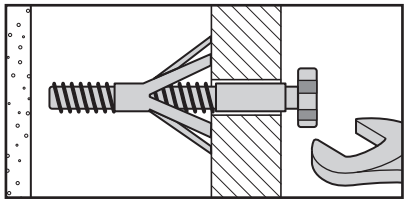

For use when fitting or supporting heavy loads such as shelving, wall cabinets and coat racks.

No.6 “ Shield Anchor” wall plug – heavy loads

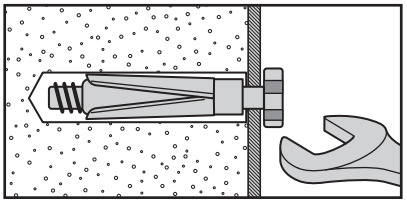

For use with heavier loads such as TV and HiFi speakers and satellite dishes etc.

## Care & Maintenance

Safety: always check the fitting and location to ensure your safety in and around the home.

Fitting: from time to time check the fitting to ensure the wall plugs or screws do not become loose.