DeerValley®

DV-1SD0412S06	60" x 60"	Bathtub Shower Door
PRODUCT MODEL	DIMENSIONS	PRODUCT CATEGORY



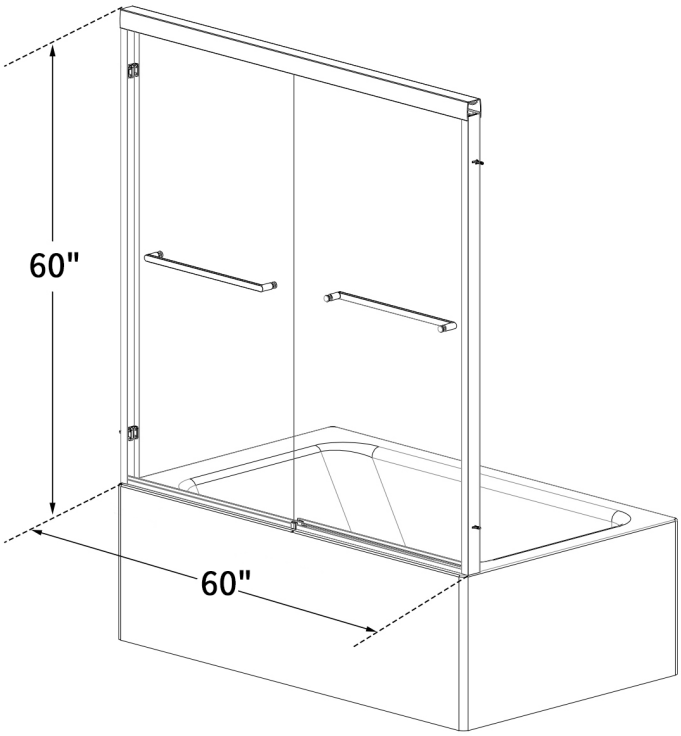

FEATURES

- ANSI-Certified 1/4" Tempered Glass
- Easy-Clean Safety Glass
- Premium Aluminum & Stainless Hardware
- Adjustable Out-of-Plumb Fitting
- Tool-less Click-on Bumpers
- Excellent Waterproof Performance
- Universal Reversible Sliding
- Customizable Width & Trim-to-Size
- Smooth & Quiet Rollers

SPECIFICATIONS

- Glass Material: Tempered Glass
- Hardware: 304 Stainless Steel
- Product Size: 60"W x 60"H
- Width Adjustment: ⩽4"
- Weight: 88.8 lbs
- Door Installation Type: Double Sliding
- Glass Thickness: 1/4"
- Installation Type: Tub-Mounted
- Glass Certification: ANSI/SGCC
- Frame Type: Framed
- Glass Finish: Clear

ACCESSORIES LIST

- Top Track ×1
- Rollers ×4
- Wall Profiles ×2
- Ø6 Wall Plugs (1/4") ×5
- ST4×35 Screws (1 3/8") ×4
- Handles ×2
- Door Glasses ×2
- Buffers ×4
- Seals Under Door Glass ×2
- Threshold ×1
- Guider ×1
- ST4×25 Screw (1") ×1
- M4 Allen Key ×1
- M3 Allen Key ×1
- ST4×10 Screws (3/8") ×2
- Caps ×2

INSTALLATION

- Tub-Mounted

COLOR

Matte Black

service@deervalleybath.com
(312) 626-9466

5-Year Limited Warranty