Assembly Guide

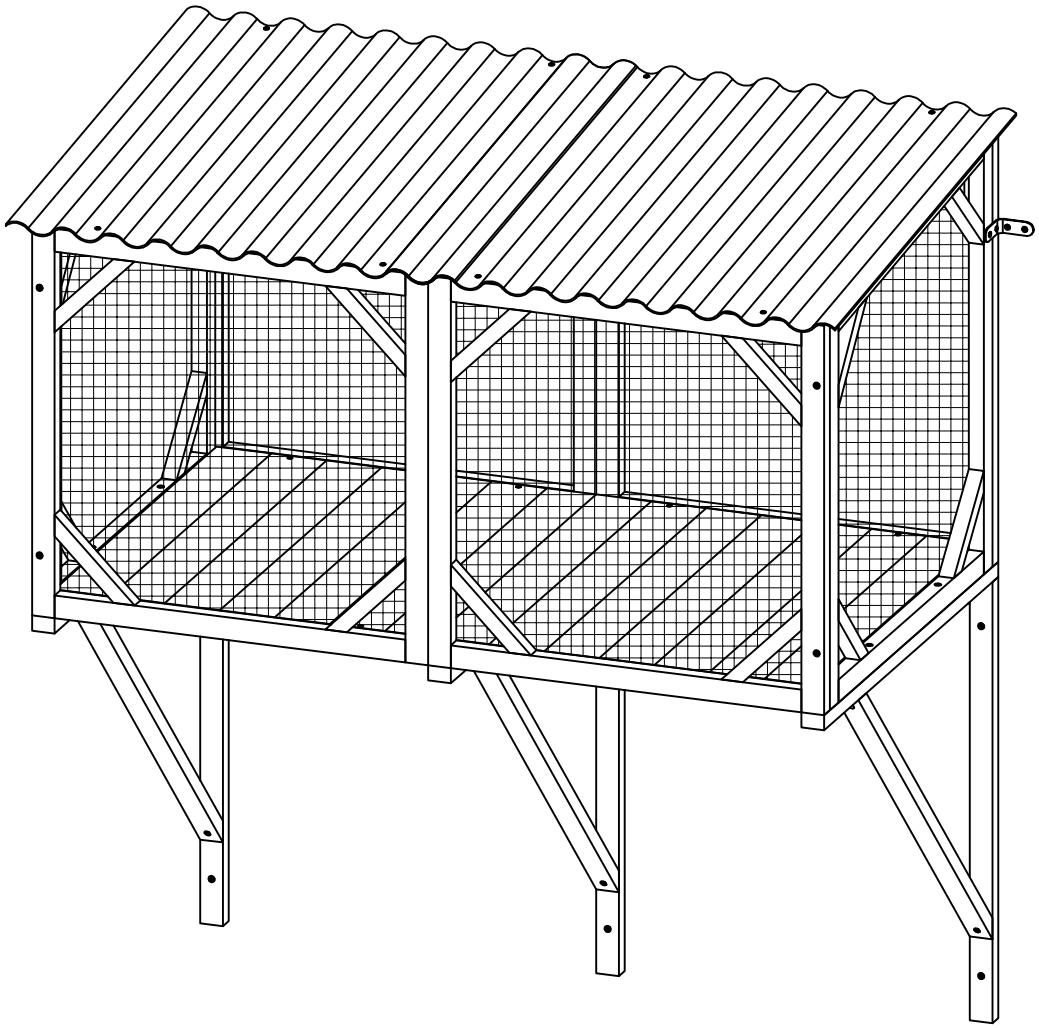

READ AND SAVE THIS INSTRUCTIONS FOR FUTURE USE

ASSEMBLY & INSTRUCTION MANUAL

PART LIST

Ax1

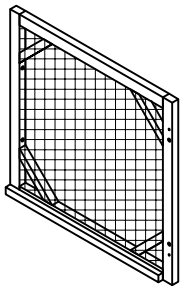

Bx1

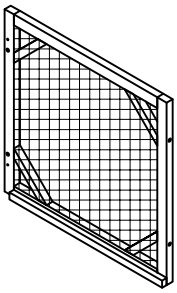

Cx1

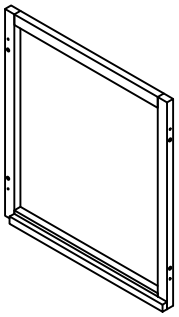

Dx1

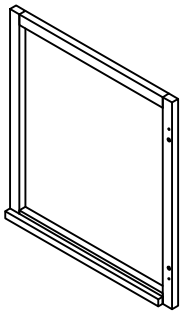

Ex1

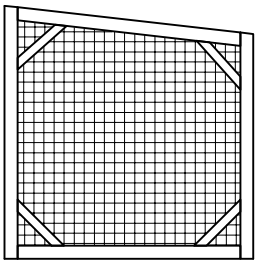

Fx1

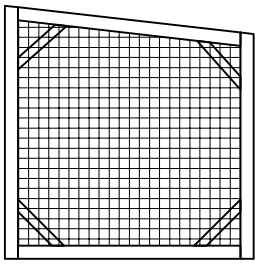

Gx2

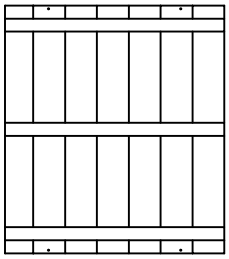

Hx2

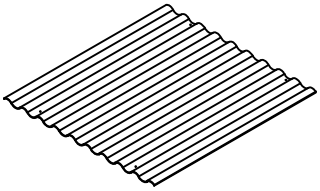

Ix2

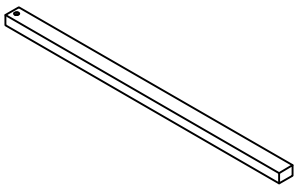

Jx1

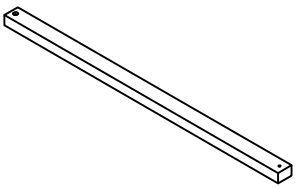

Kx3

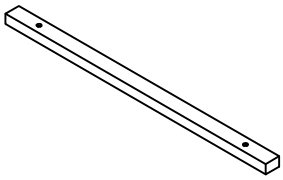

Lx3

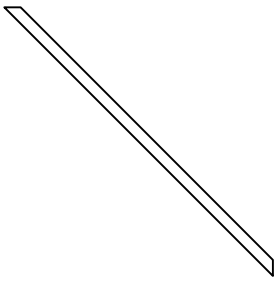

①x12+1

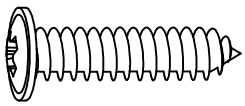

M3*16mm

②x8



M3*25mm

③x4

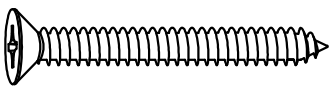

M3.5*25mm

④x7+1



M3.5*30mm

⑤x11+1



M3.5*35mm

⑥x10+1



M3.5*45mm

⑦x4



M3.5*50mm

⑧x12+1



ϕ8*20mm

⑨x10

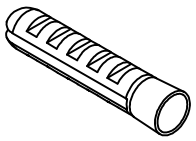

⑩x2

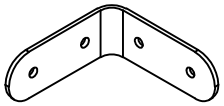

01

Cx1
Dx1
⑦x2
⑧x2

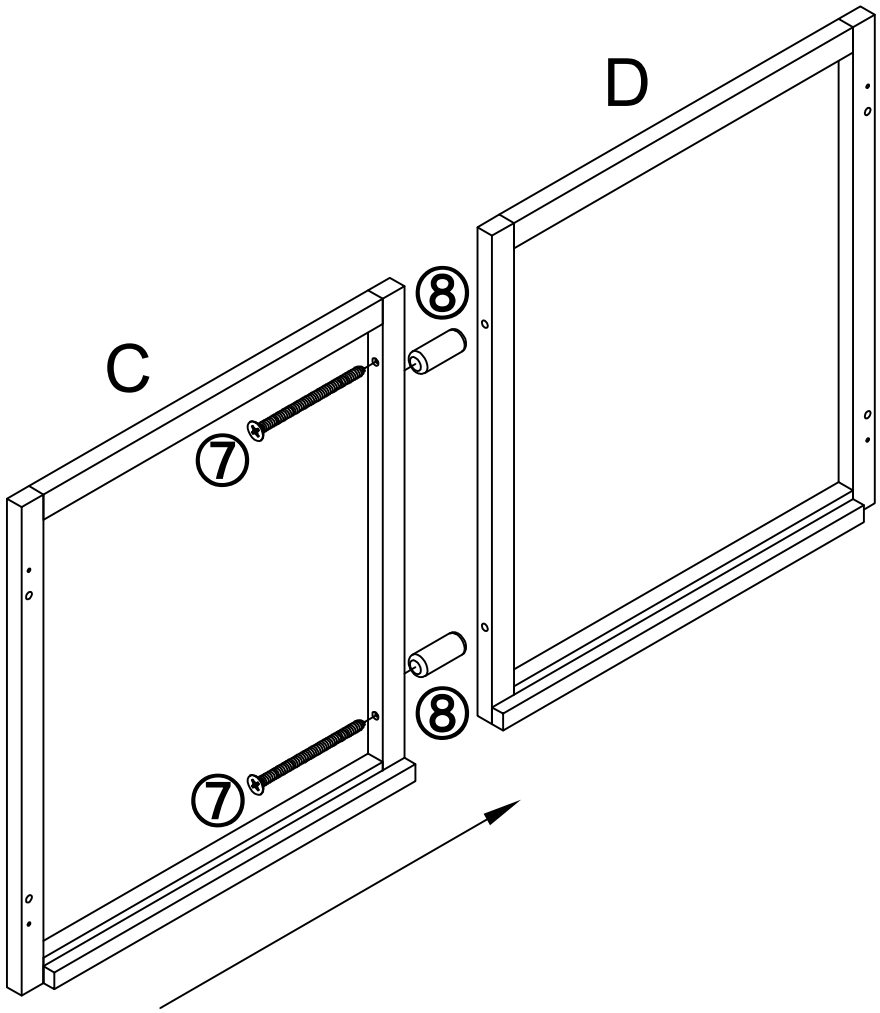

02

Ex1
Fx1
⑧x8

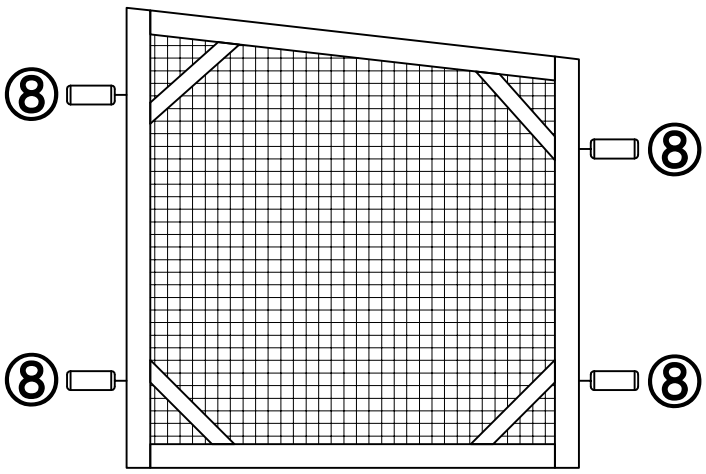

E

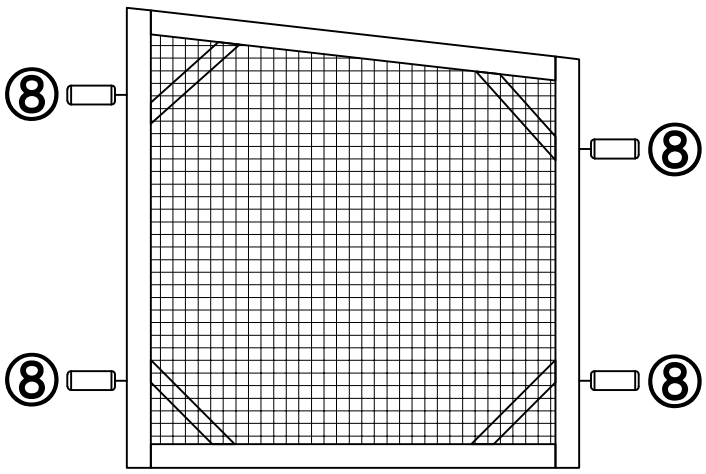

F

⑤x4

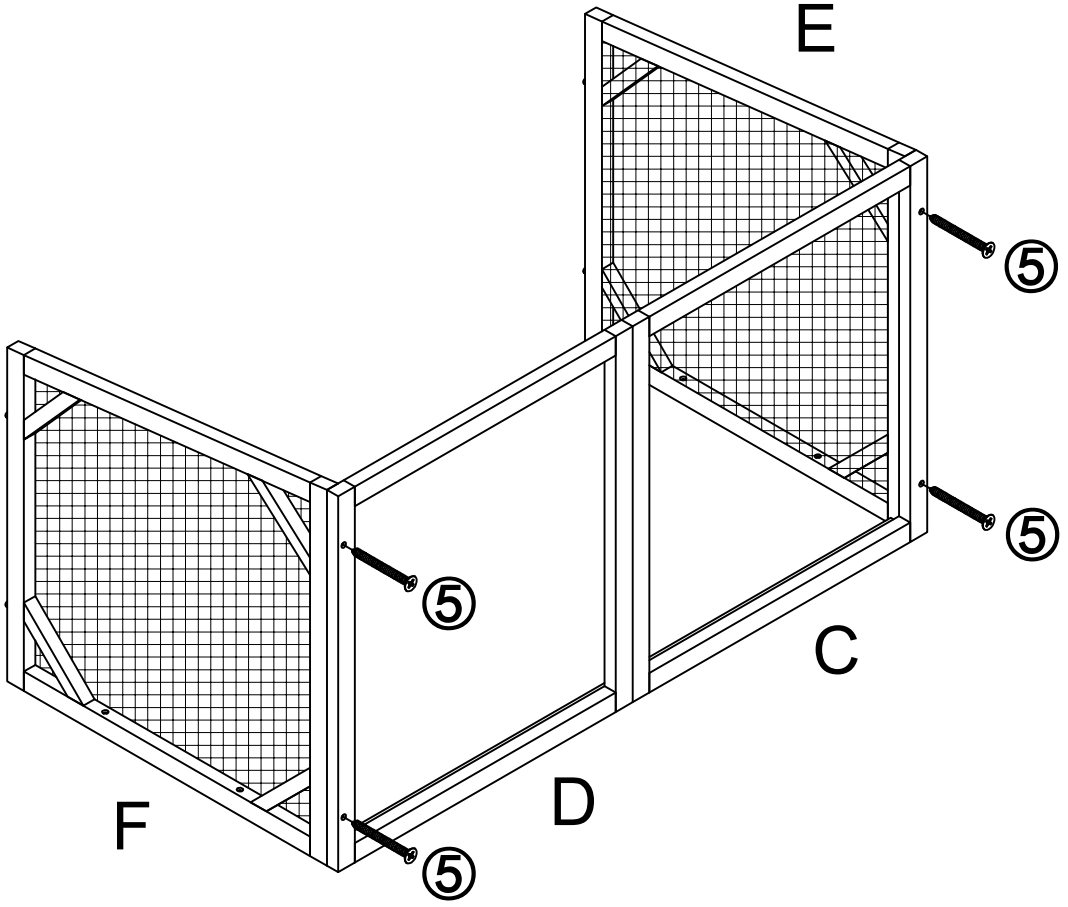

Ax1
Bx1
⑦x2
⑧x2

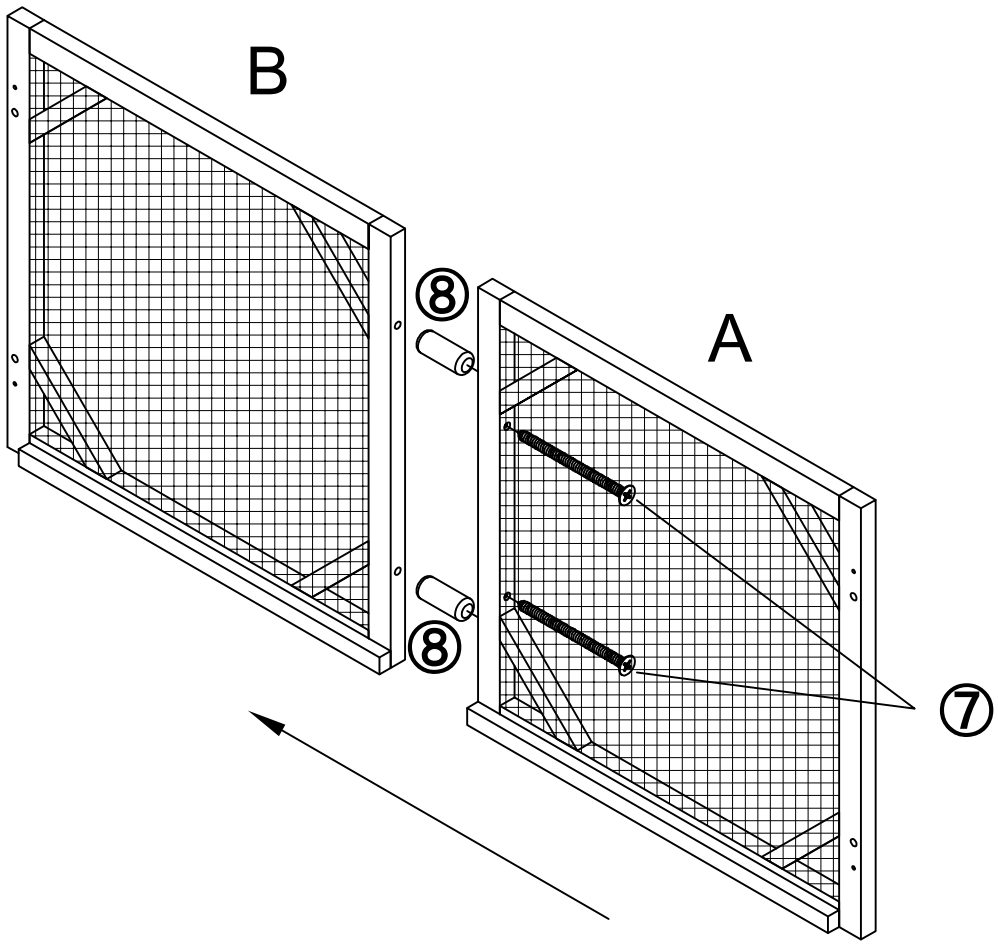

⑤x4

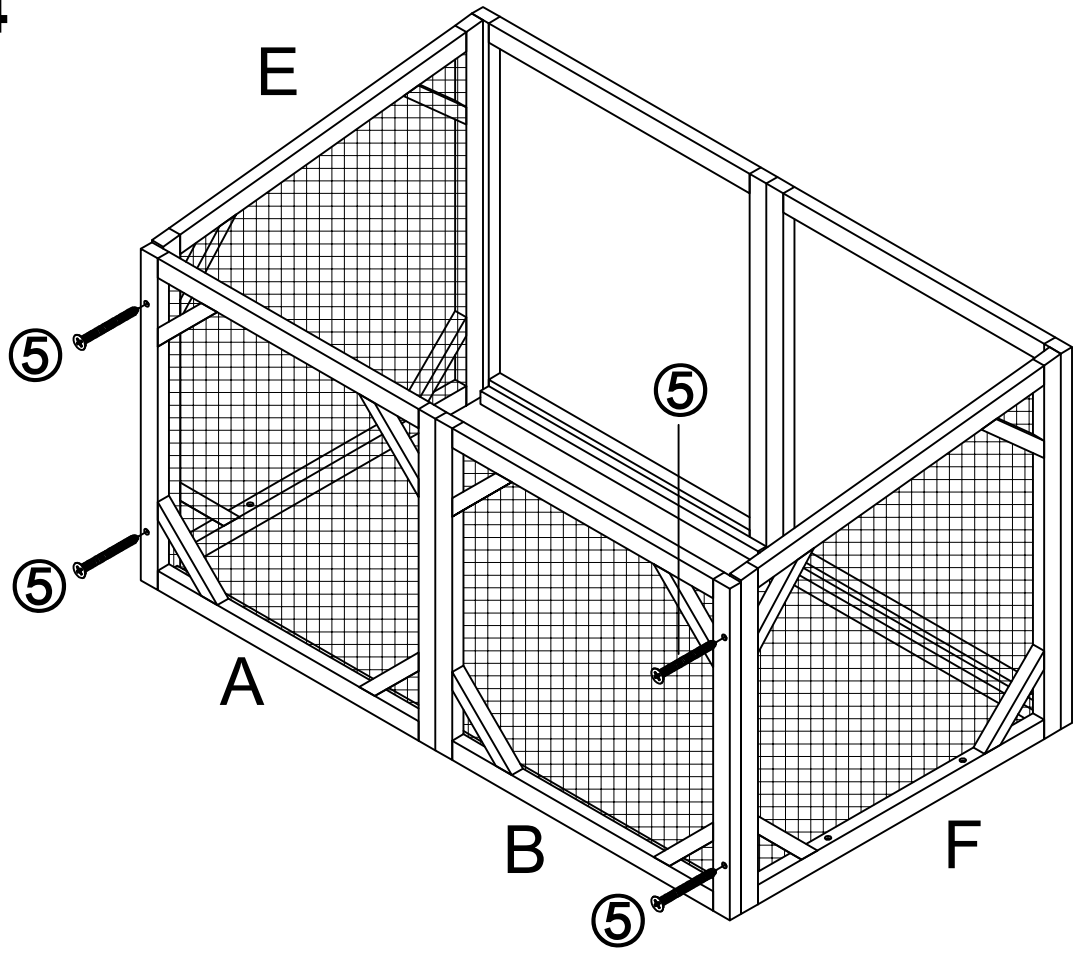

Gx2

②x8

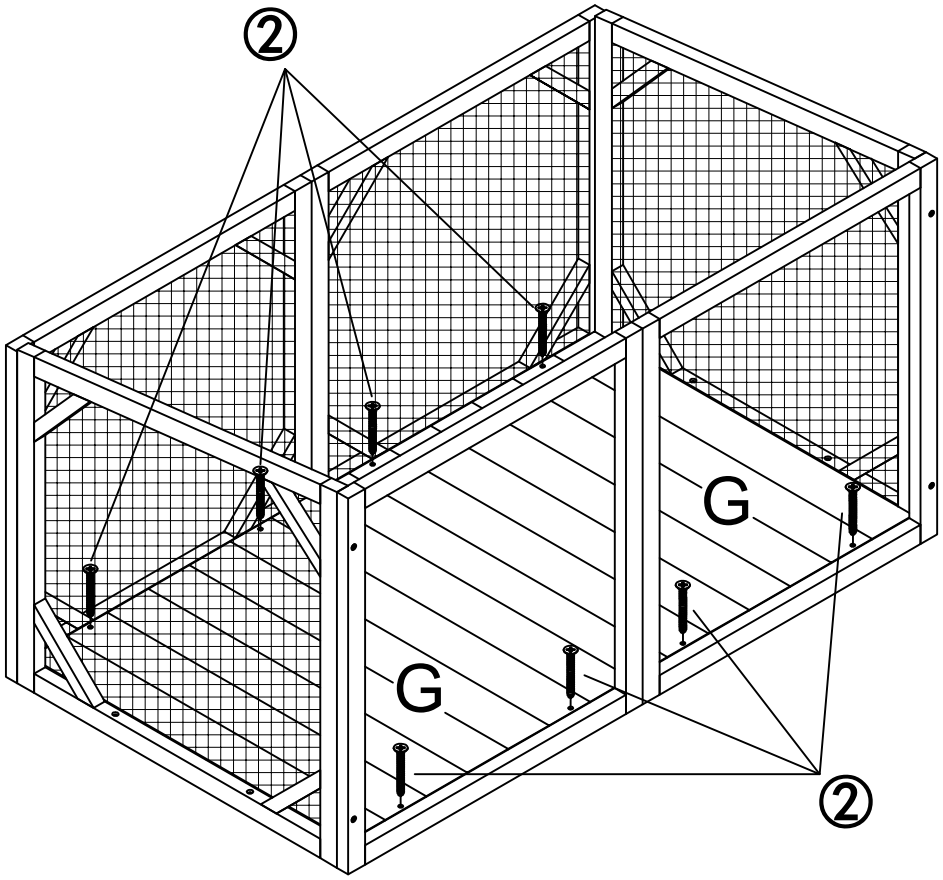

Hx2
①x8

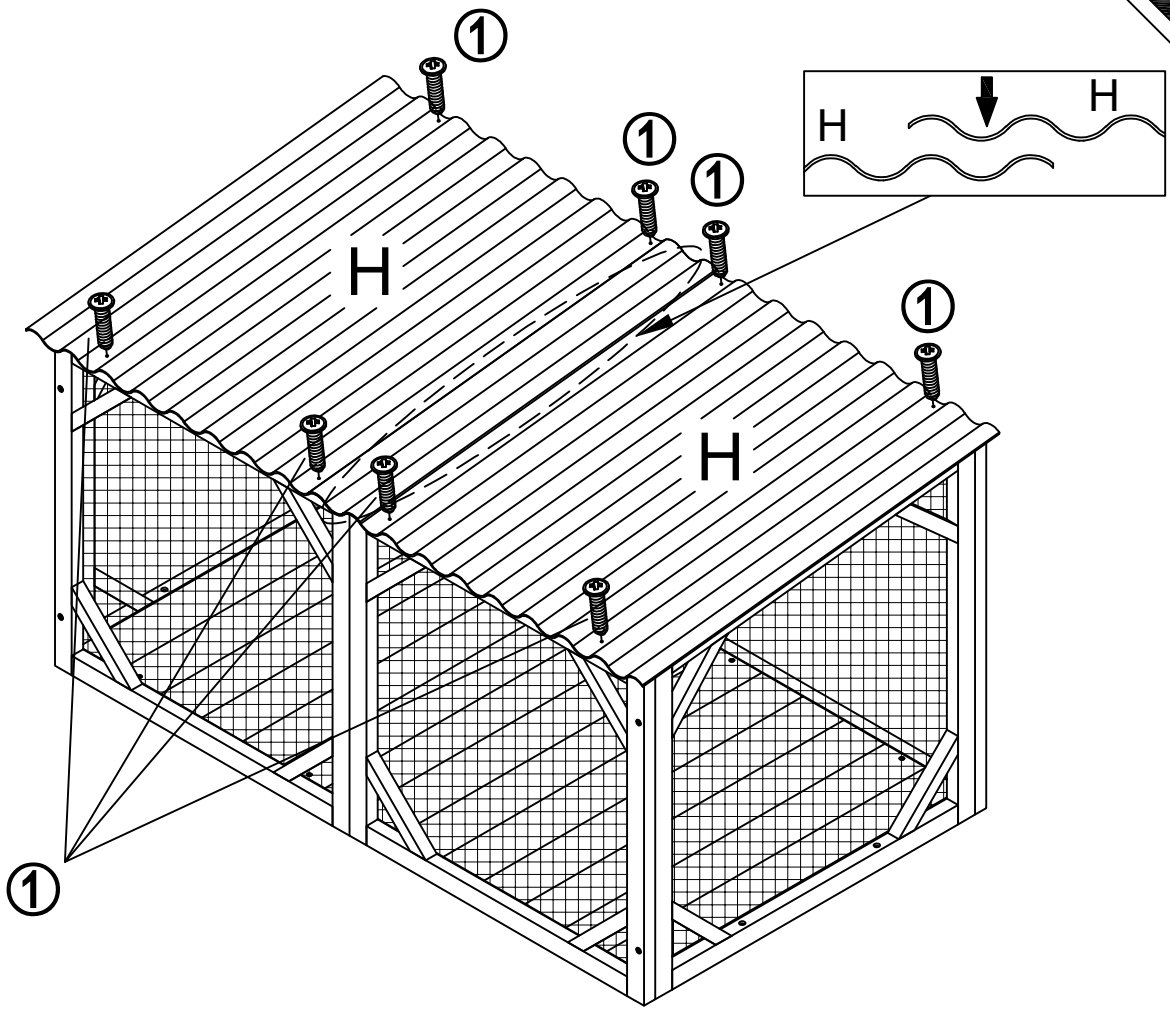

Ix2 **④x6**
Jx1 **⑤x3**
Kx3
Lx3

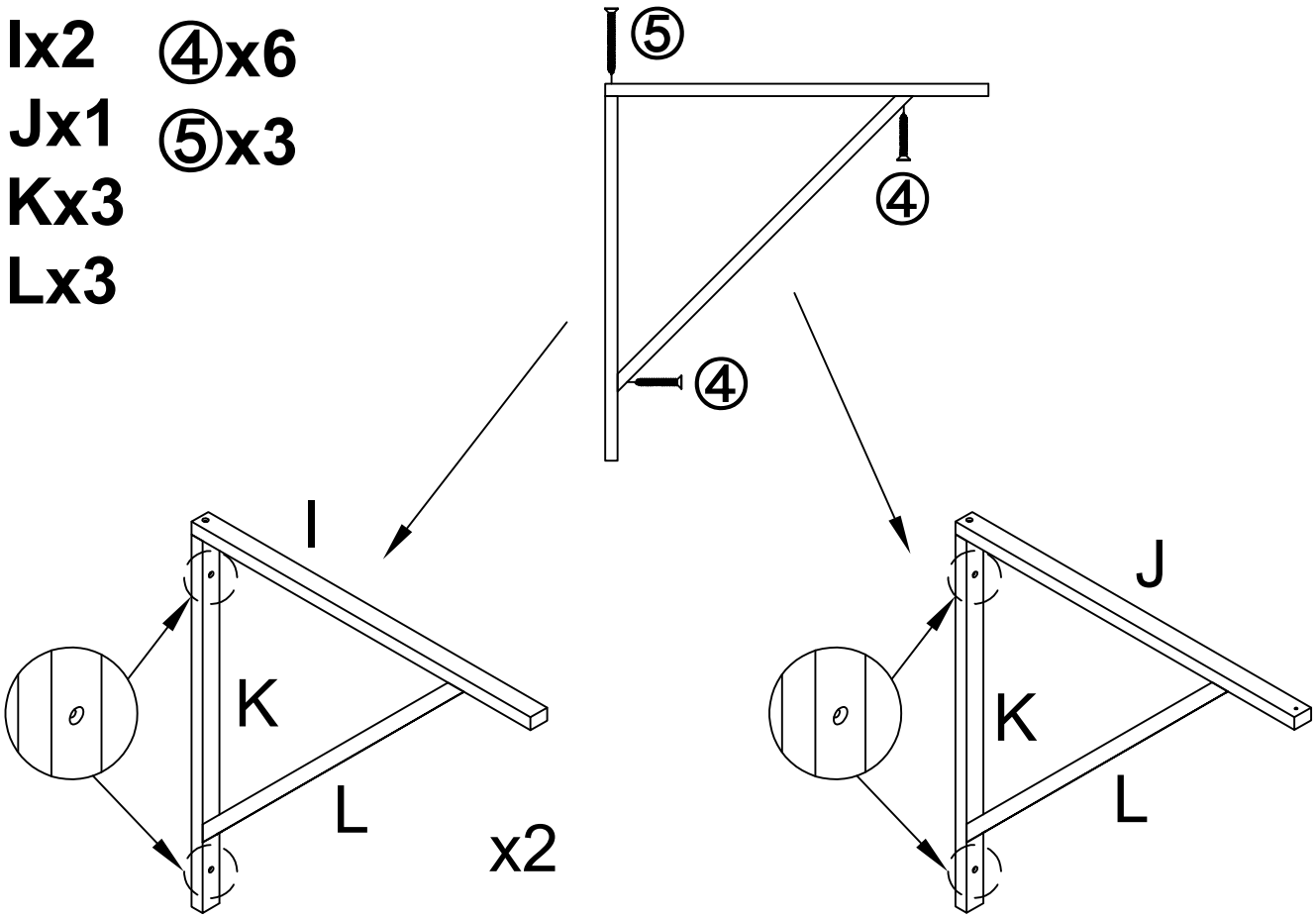

⑥x6

⑨x6

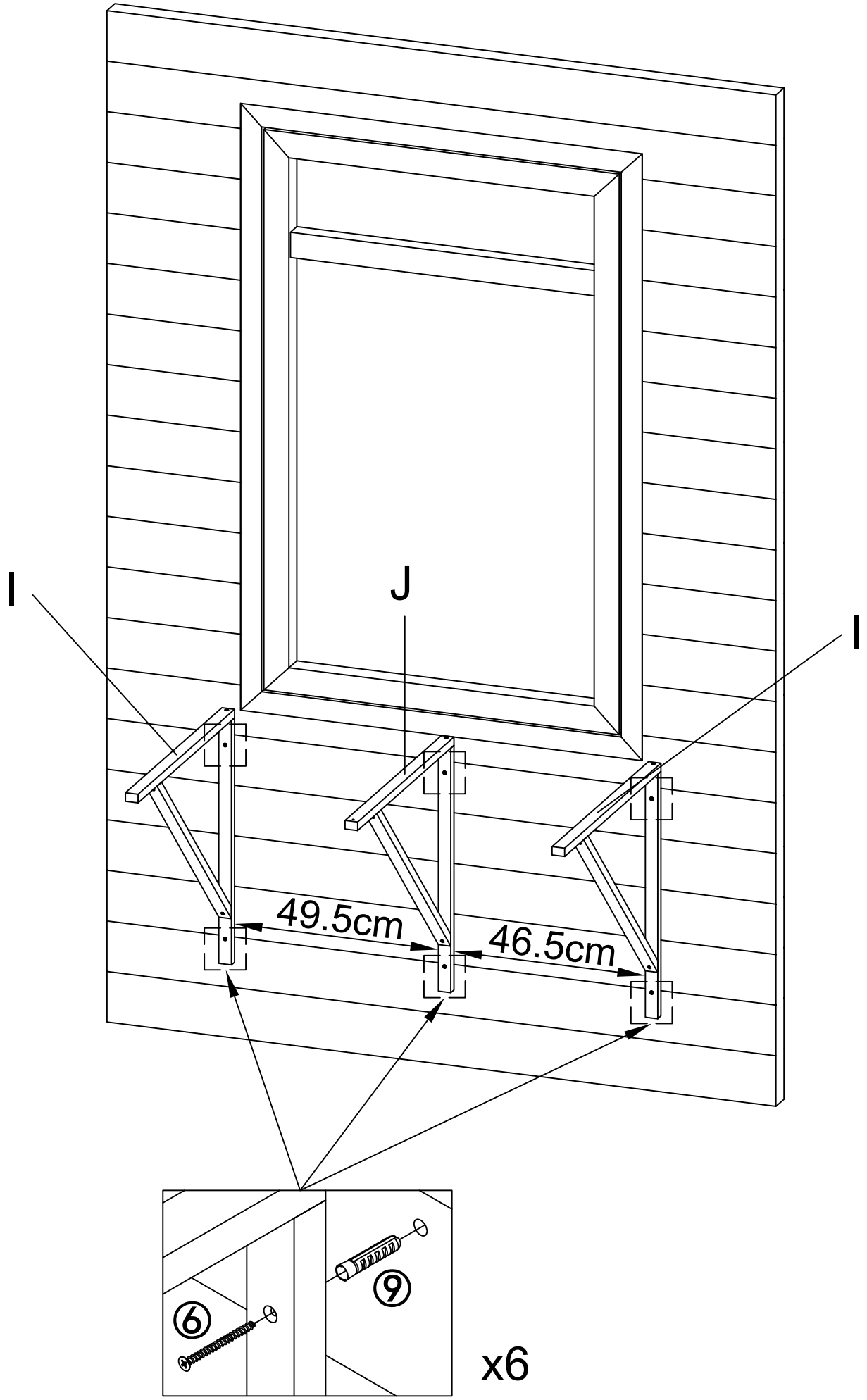

④x1

⑥x4

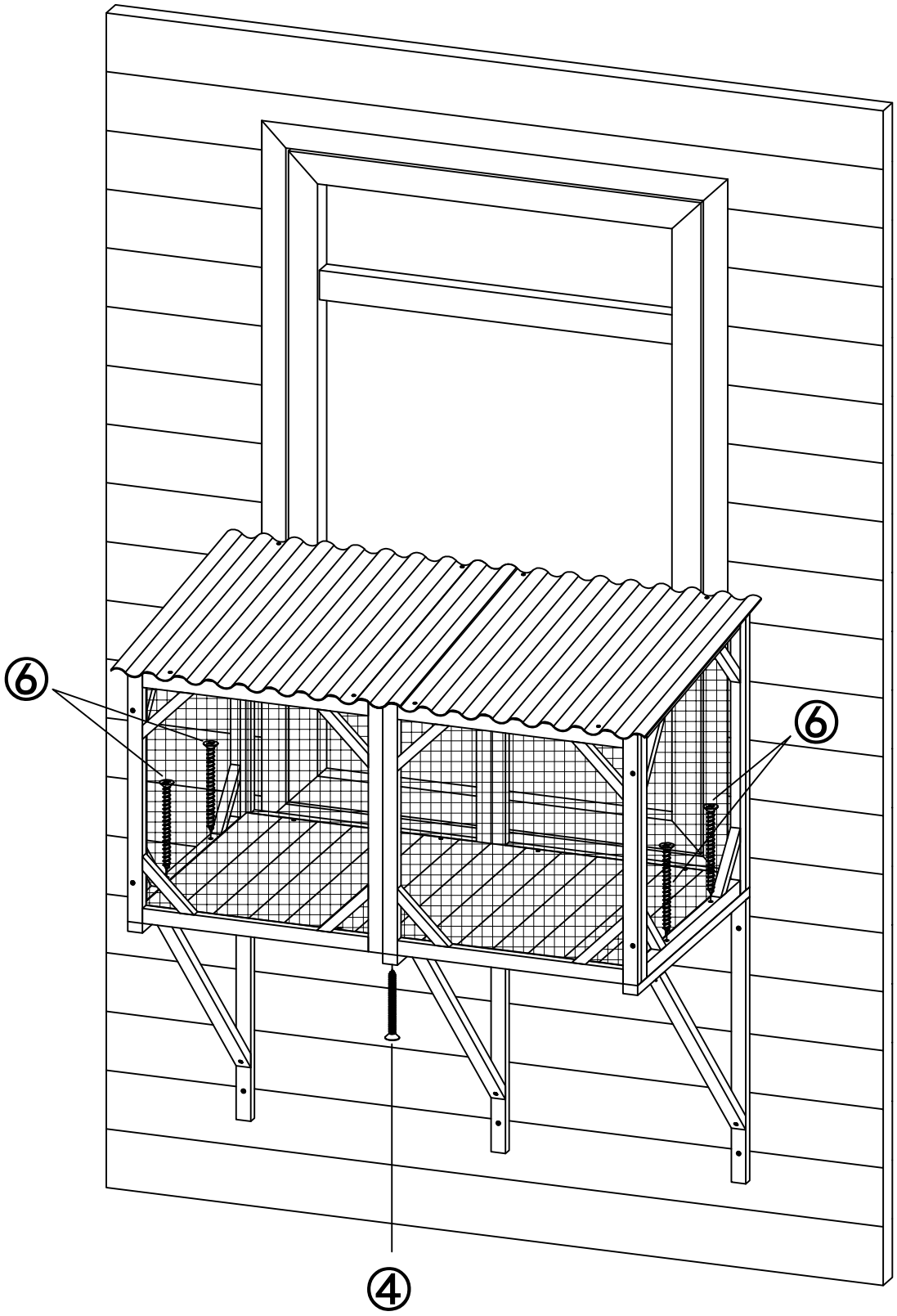

①x4
③x4
⑨x4
⑩x2

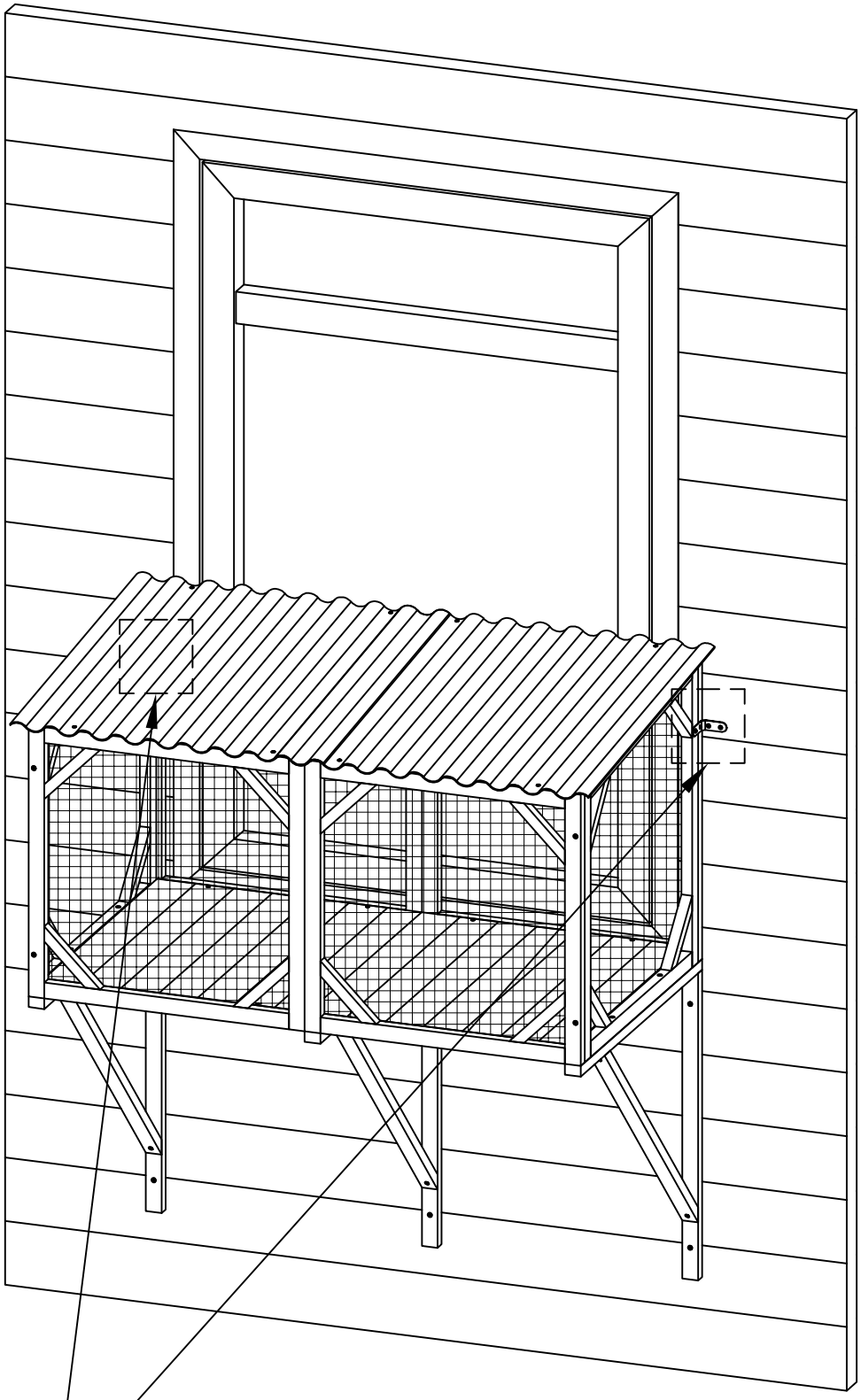

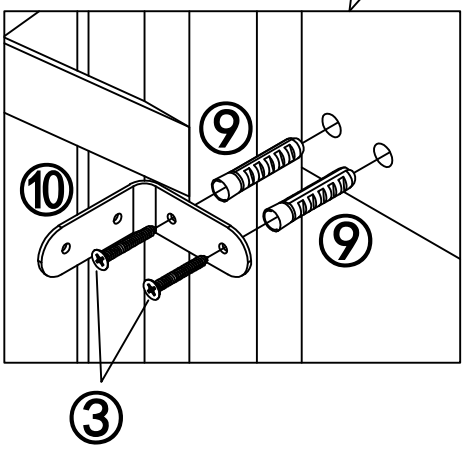

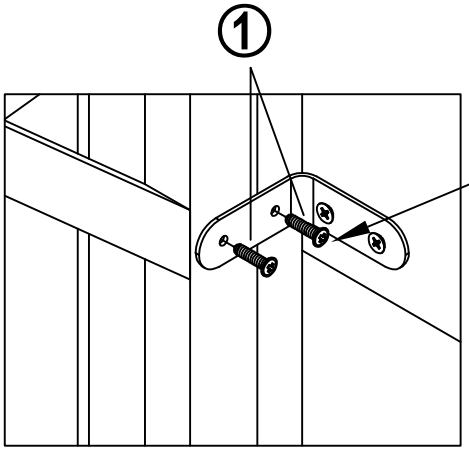

Note:
Please select the hole positions based on the actual window conditions.