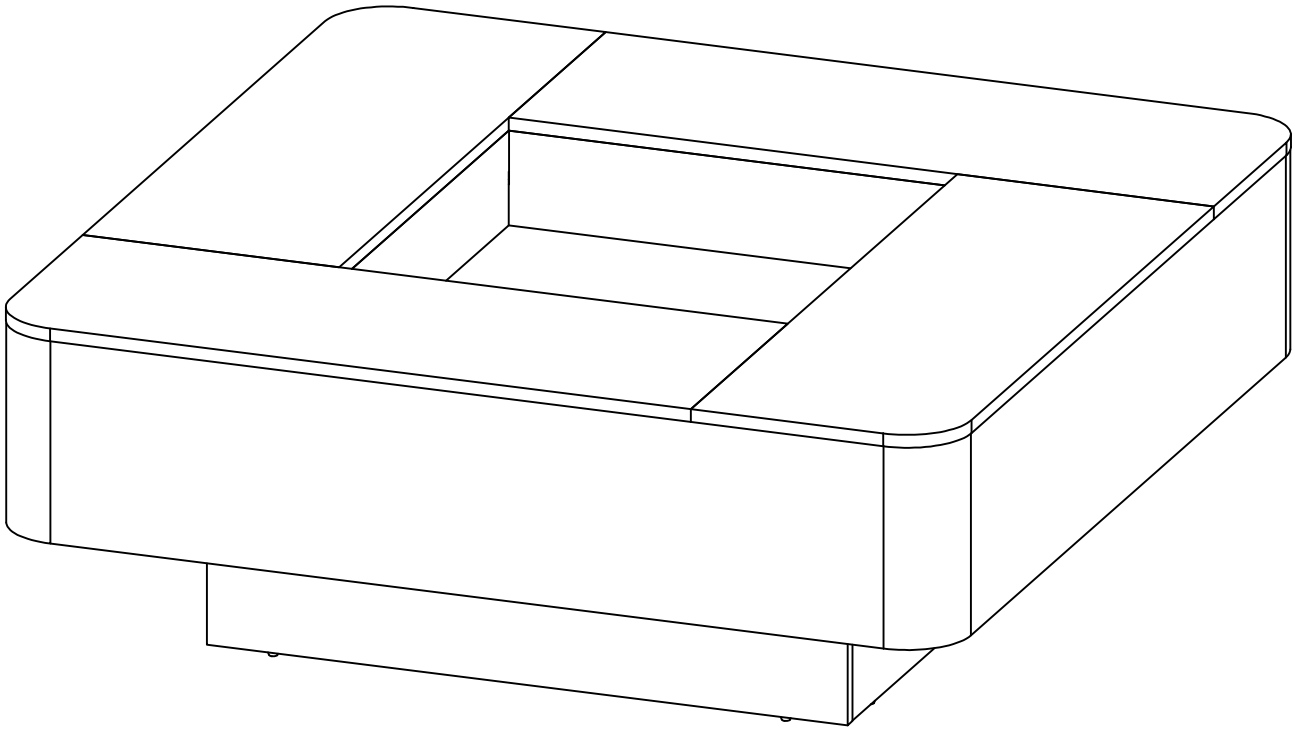

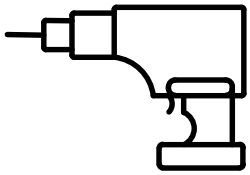

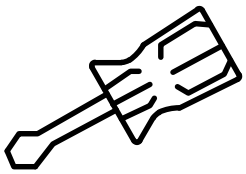

Manual screwdriver recommended

When using an electric drill, you must switch it to Low Torque mode to avoid stripping screws inside the sheet material.

A×64PCS	B×64PCS	C×64PCS	D×16PCS	E×8PCS
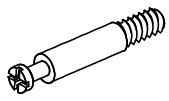 M6×35mm	 Ø15×9.3mm	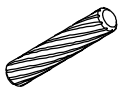 Ø6×30mm	 Ø3×12mm	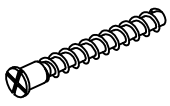 Ø5×40mm
F×8PCS	G×1PC	H×1PC		
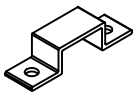	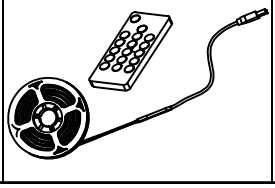	 M4mm		

1.WARNING: Check screw lengths carefully before inserting. Using the wrong screw size here can permanently pierce or damage the tabletop surface.

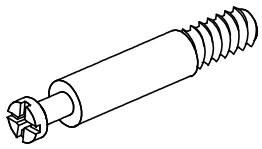

A: M6×35mm

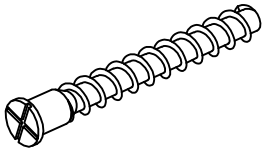

E: Ø5×40mm

2.**EXPERT TIP:** Do NOT tighten any screws or cam locks completely until all panels and frames are fully aligned and interconnected. Partially tighten them at first, then secure them all at the end.

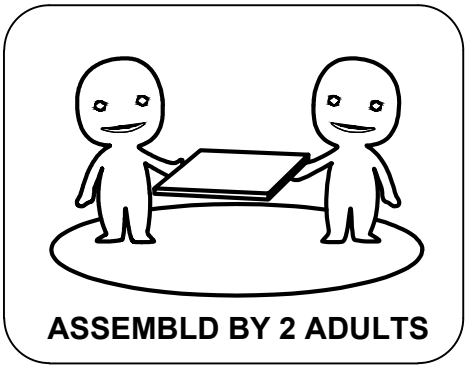

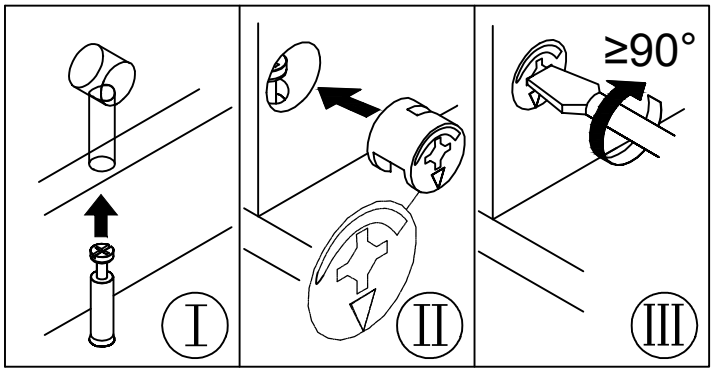

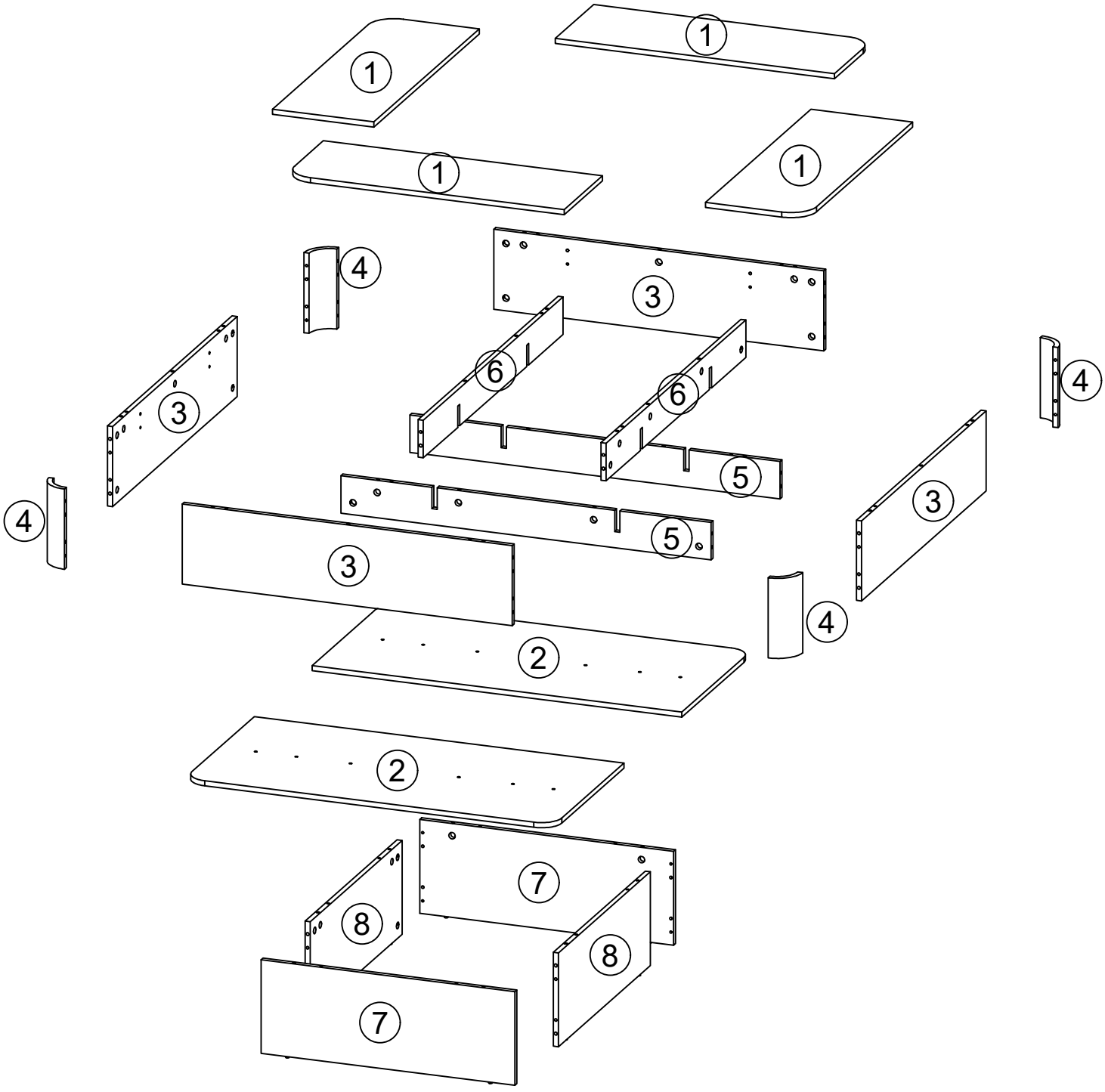
1
1
1
1
4
3
6
6
4
3
5
3
5
4
3
4
2
2
7
8
8
7

A×48PCS
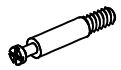
M6×35mm

1.

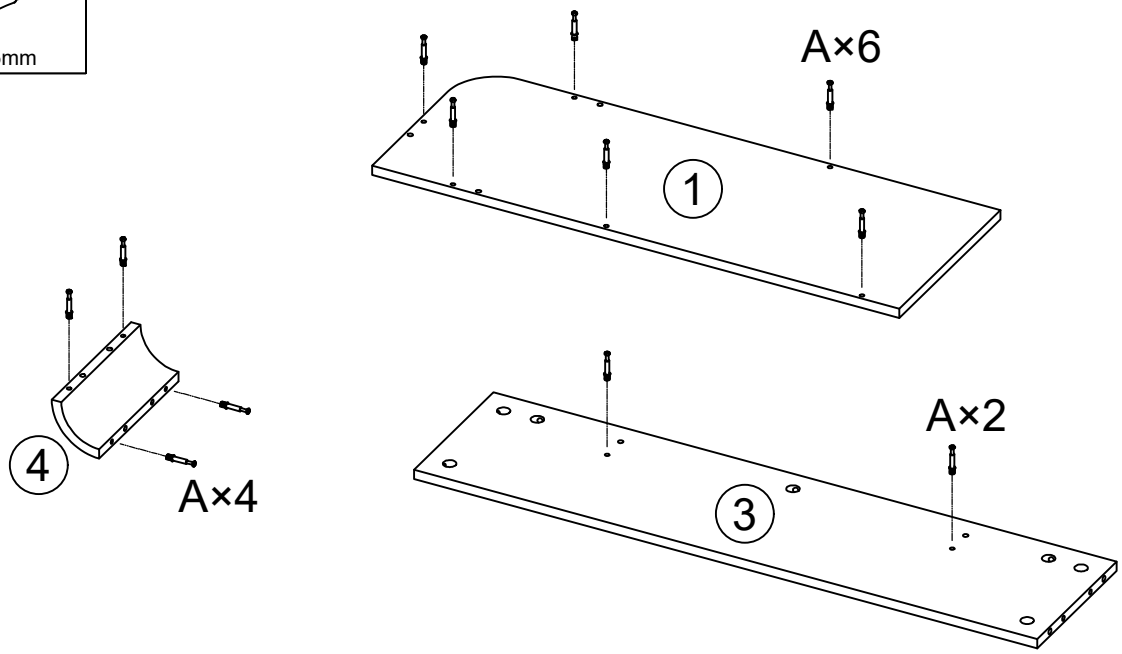

×4

B×8PCS	C×8PCS
	
Ø15×9.3mm	Ø6×30mm

2.

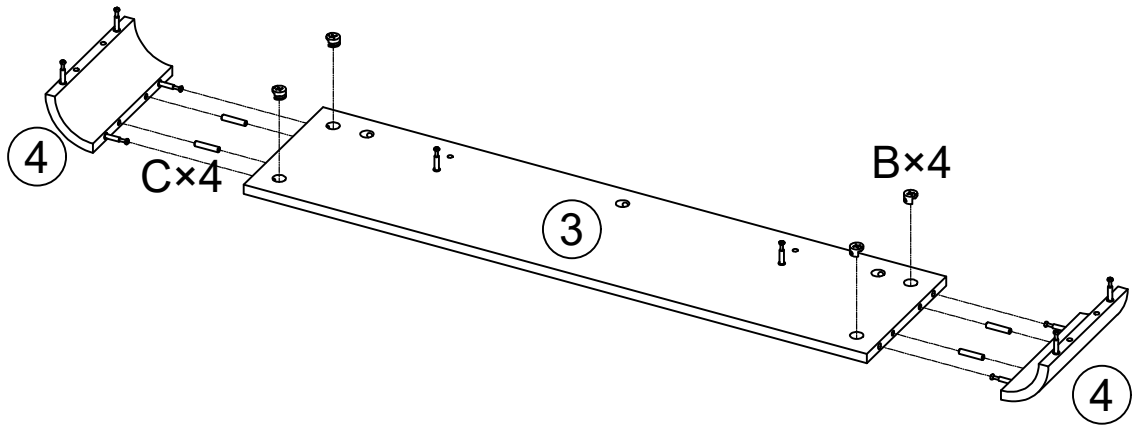

×2

3.

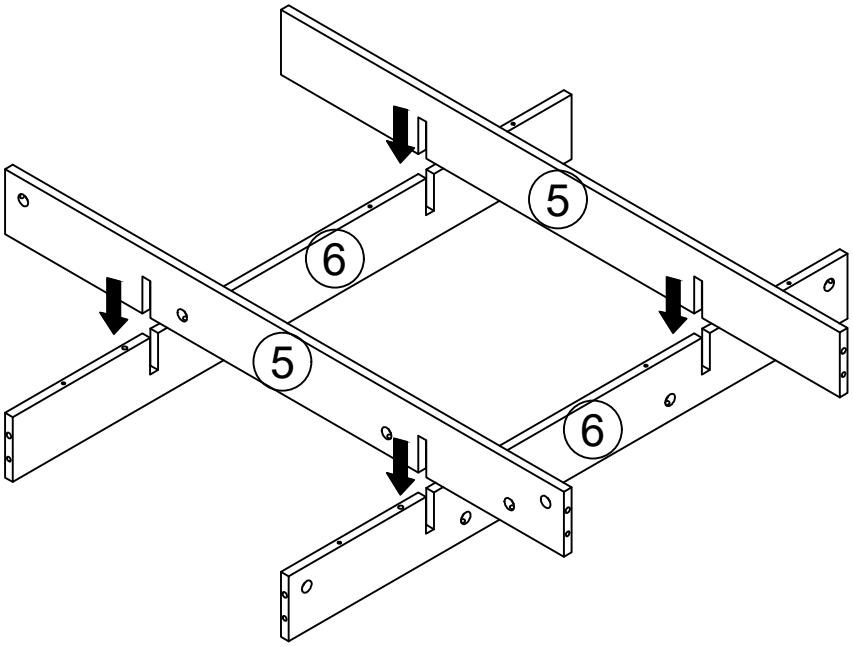

4.

B×4PCS	C×4PCS
	
Ø15×9.3mm	Ø6×30mm

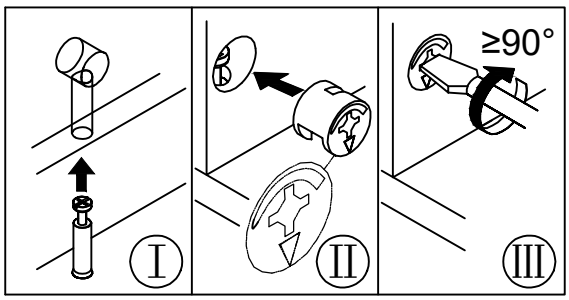

Double Check: Ensure the arrow on the Cam Lock (B) points directly toward the outer side hole before sliding the panels together.

B×6PCS	C×6PCS
 Ø15×9.3mm	 Ø6×30mm

5.

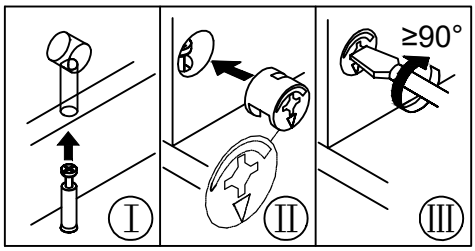

Double Check: Ensure the arrow on the Cam Lock (B) points directly toward the outer side hole before sliding the panels together.

B×6PCS	C×6PCS
 Ø15×9.3mm	 Ø6×30mm

6.

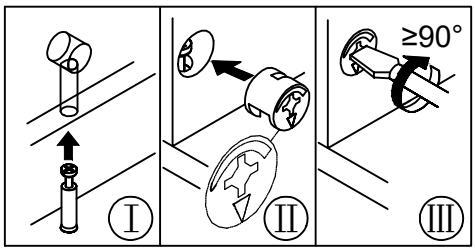

Double Check: Ensure the arrow on the Cam Lock (B) points directly toward the outer side hole before sliding the panels together.

7.

C×4PCS



Ø6×30mm

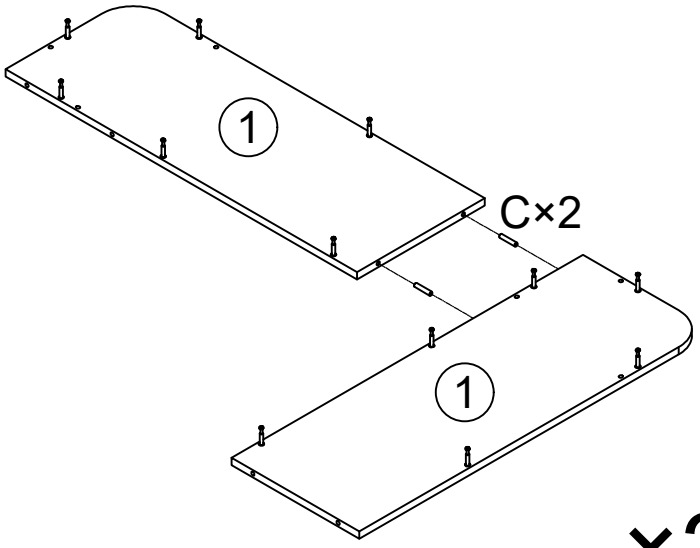

×2

8.

C×4PCS



Ø6×30mm

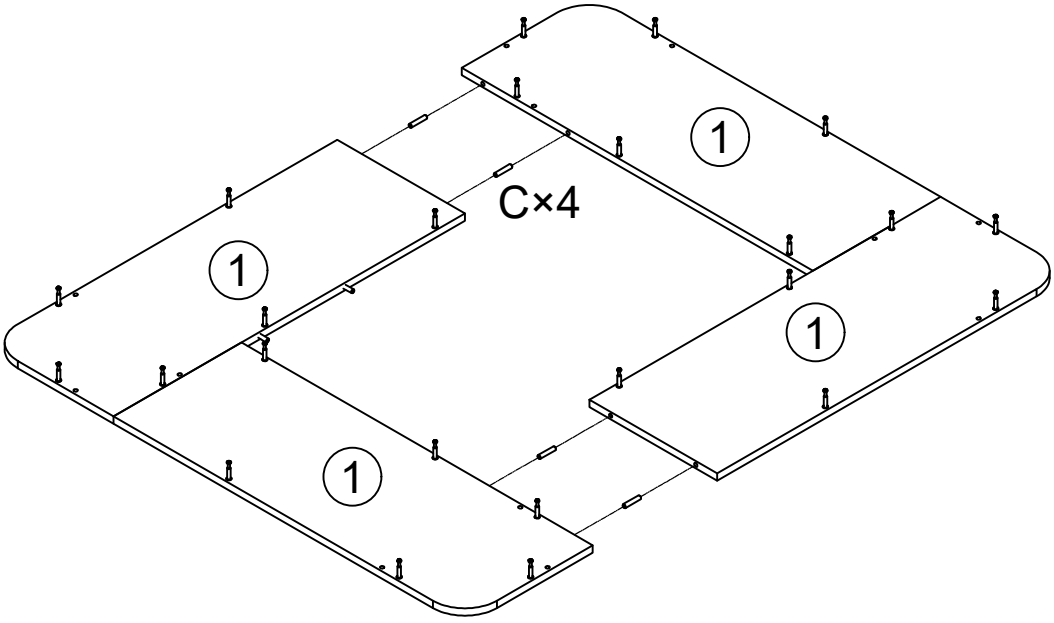

B×24PCS	C×12PCS
 Ø15×9.3mm	 Ø6×30mm

9.

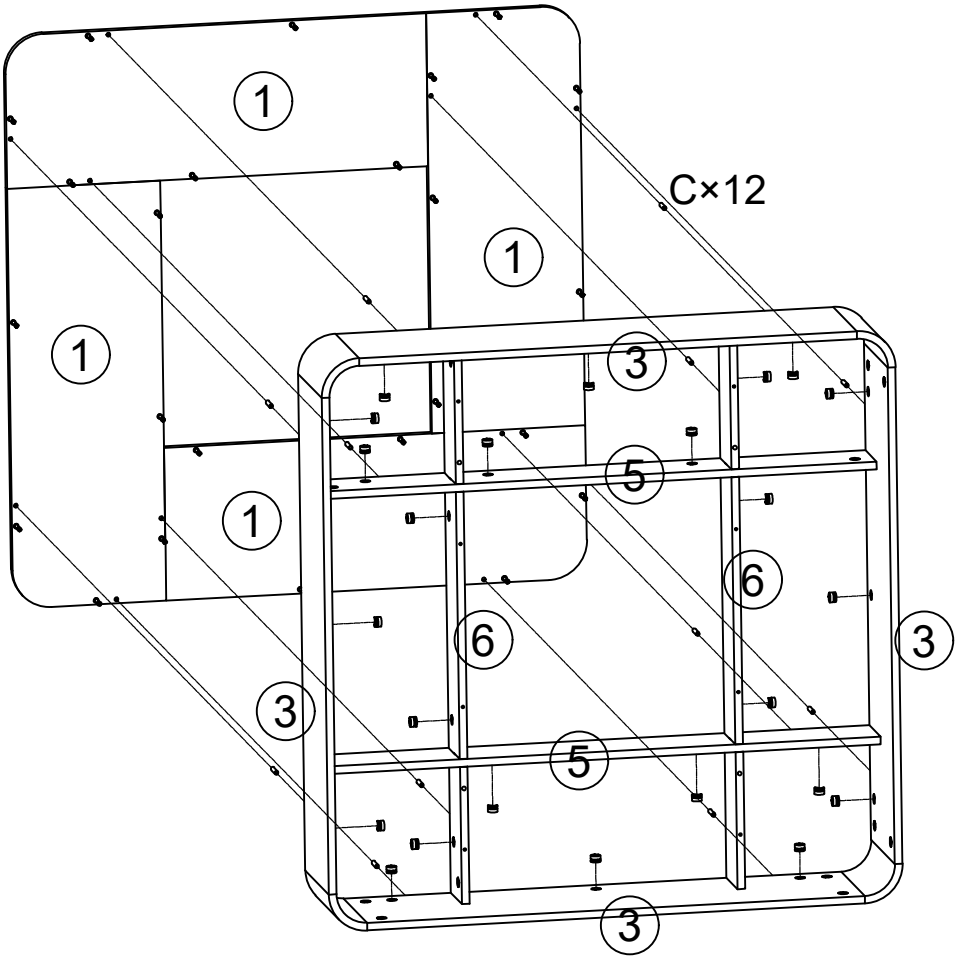

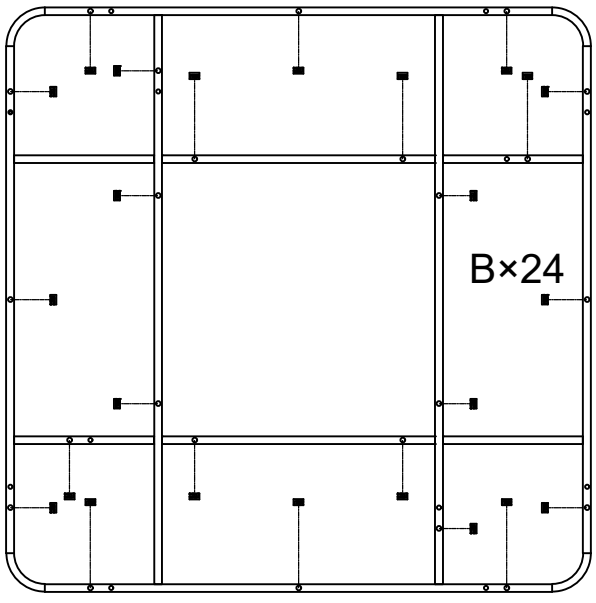

Double Check: Ensure the arrow on the Cam Lock (B) points directly toward the outer side hole before sliding the panels together.

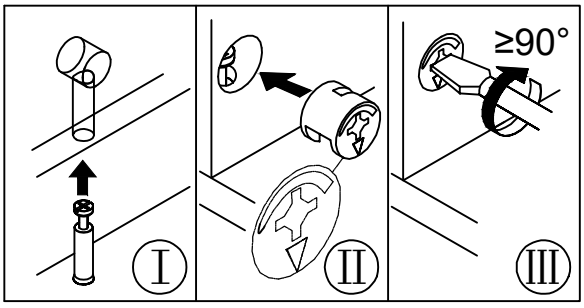

10.

A×8PCS
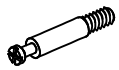
M6×35mm

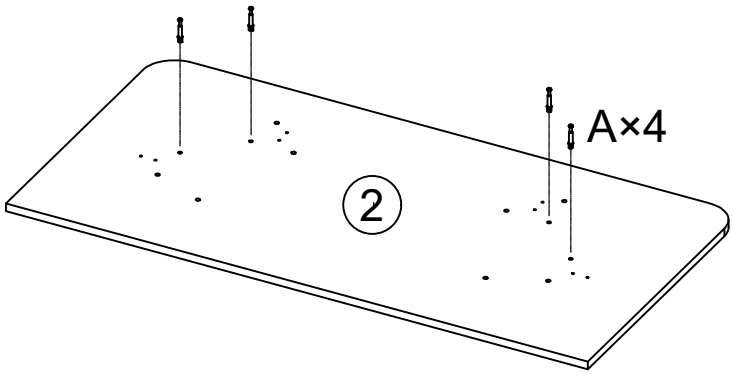

×2

11.

C×4PCS	E×8PCS
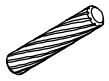	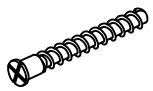
Ø6×30mm	Ø5×40mm

A×8PCS
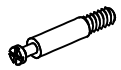
M6×35mm

12.

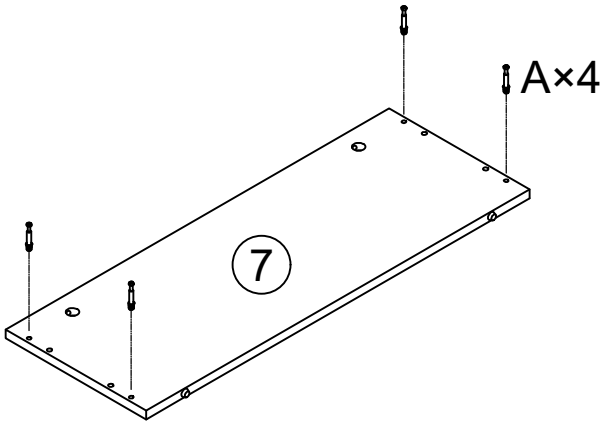

×2

B×4PCS	C×4PCS
	
Ø15×9.3mm	Ø6×30mm

13.

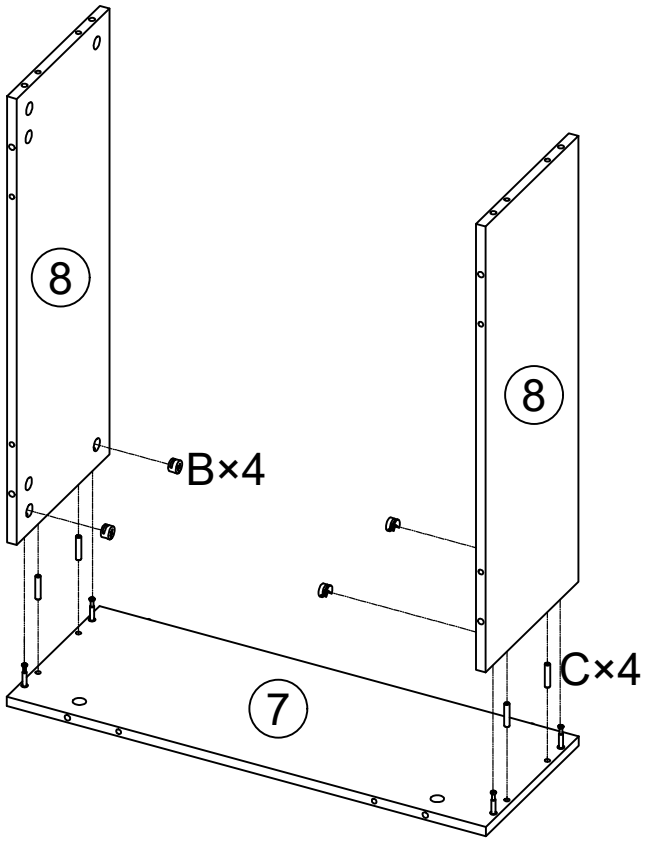

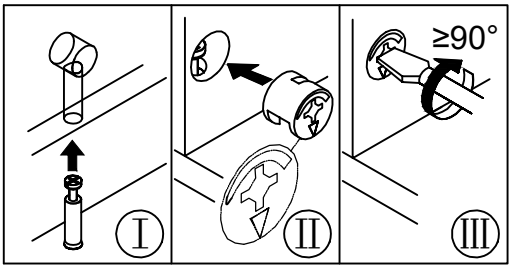

Double Check: Ensure the arrow on the Cam Lock (B) points directly toward the outer side hole before sliding the panels together.

14.

B×4PCS	C×4PCS
	
Ø15×9.3mm	Ø6×30mm

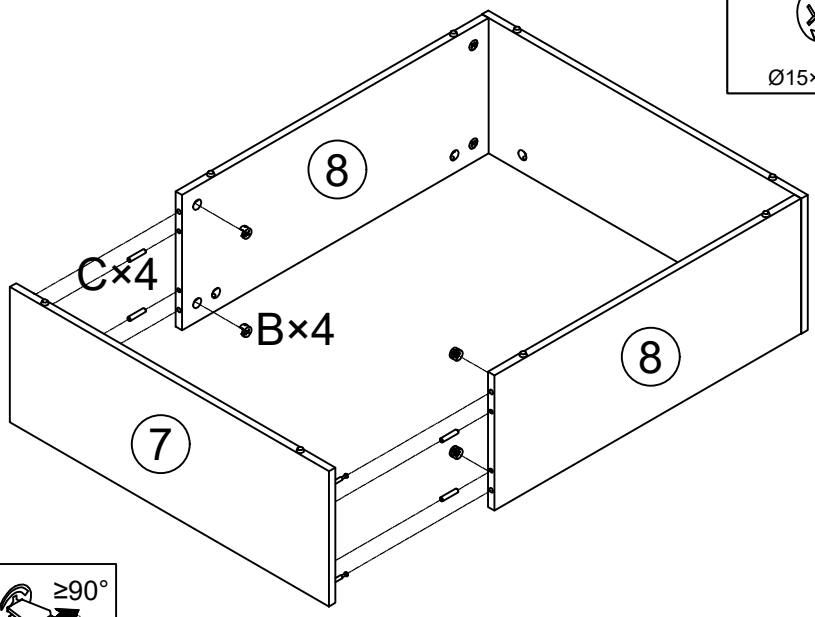

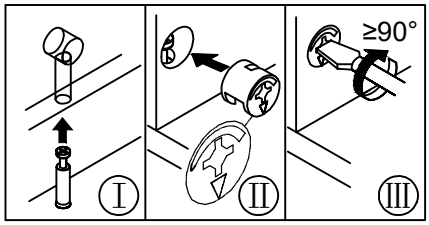

Double Check: Ensure the arrow on the Cam Lock (B) points directly toward the outer side hole before sliding the panels together.

15.

B×8PCS	C×8PCS
	
Ø15×9.3mm	Ø6×30mm

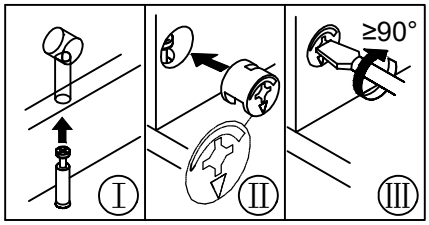

Double Check: Ensure the arrow on the Cam Lock (B) points directly toward the outer side hole before sliding the panels together.

16.

D×16PCS	F×8PCS	G×1PC
Ø3×12mm		

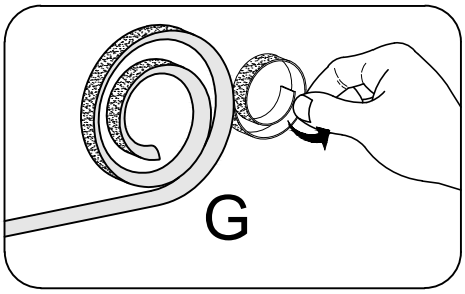

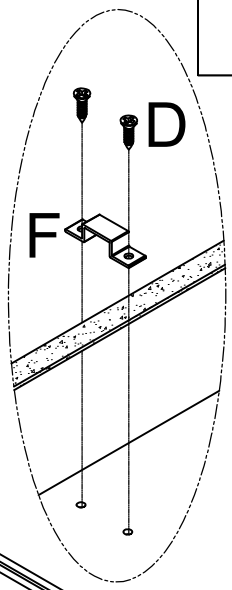

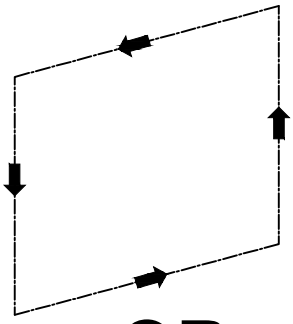

OR

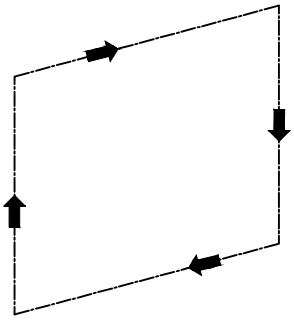

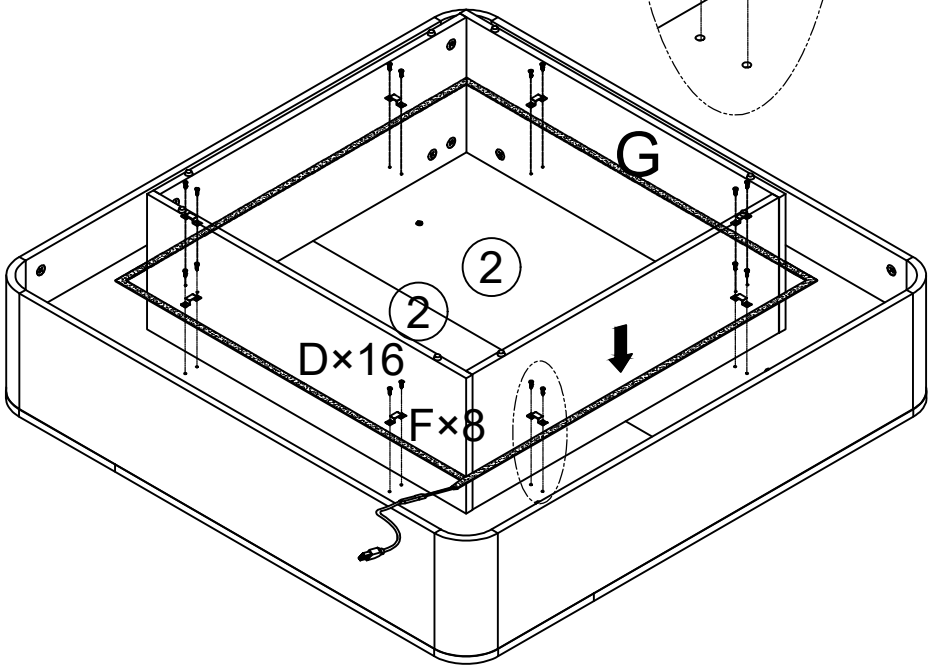

CAUTION: Always LIFT the coffee table with two people when shifting or moving it. NEVER drag or push it across the floor. Dragging puts extreme lateral stress on the joints, which can loosen the hardware and cause structural failure.

