FULL SIZE DAYBED
ASSEMBLY INSTRUCTIONS



Attention

Please use the screws correctly according to the instructions.
Thank you.

Part List

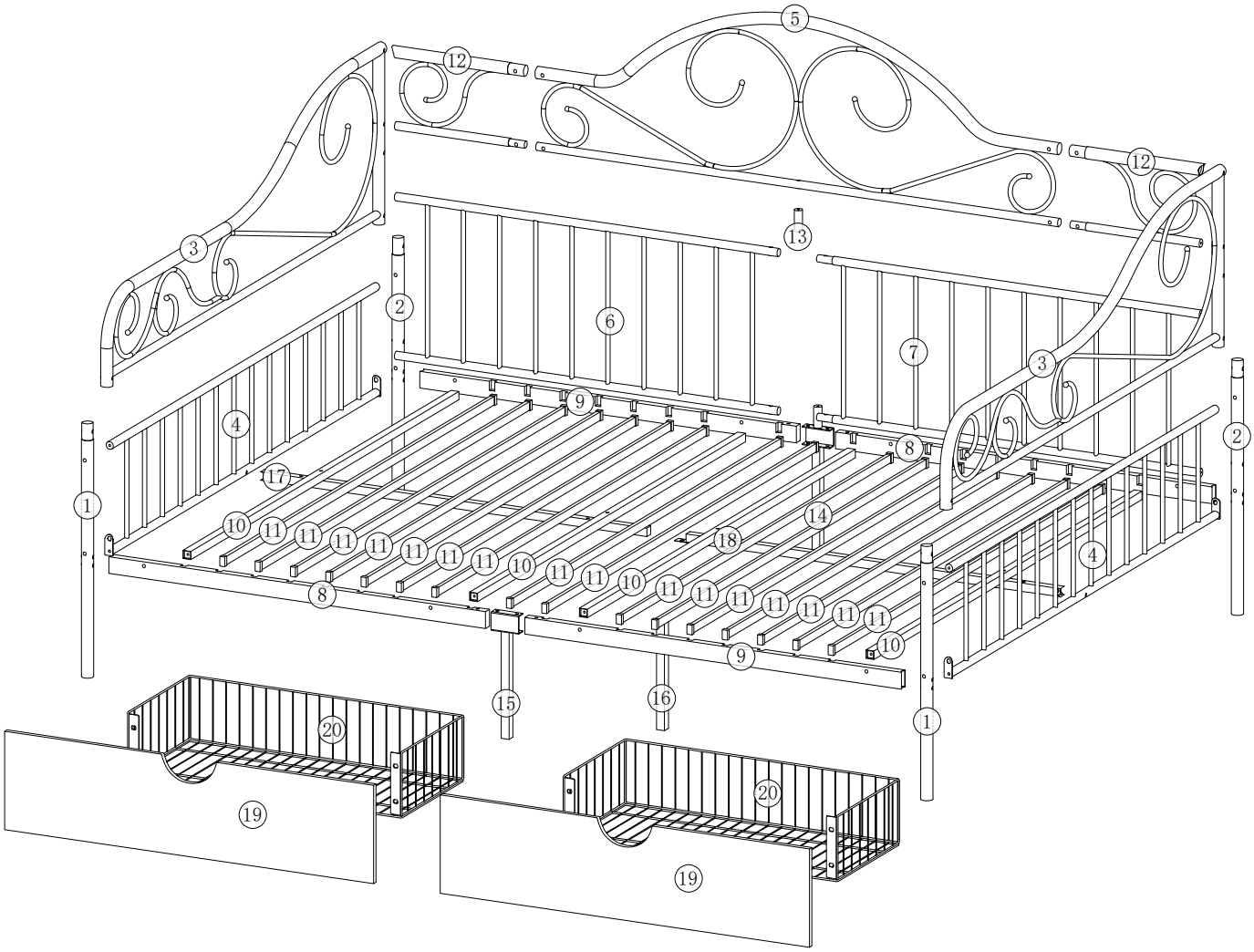
5
12
12
3
13
2
6
7
3
9
4
2
8
17
1
10
11
11
11
11
11
11
11
10
11
11
10
11
11
11
11
11
11
11
11
14
18
4
8
9
10
15
16
1
20
19
20
19

Parts view

1-2pcs	2-2pcs	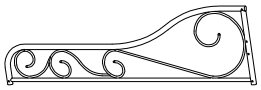 3-2pcs	 4-2pcs
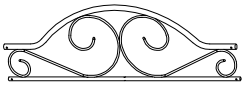 5-1pcs	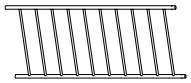 6-1pcs	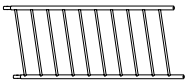 7-1pcs	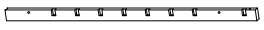 8-2pcs
 9-2pcs	10-4pcs	11-16pcs	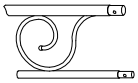 12-2pcs
13-1pcs	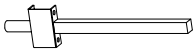 14-1pcs	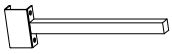 15-1pcs	16-1pcs
17-1pcs	18-1pcs	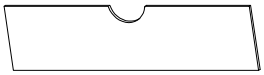 19-2pcs	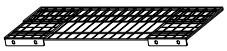 20-2pcs

Hardware List

A M6*55mm--4PCS	B M6*45mm--21PCS	C M6*35mm--25PCS	D M6*20mm--11PCS	E M6*10mm--11PCS
F M6*17mm--22PCS	 G 4mm--4PCS	 H1 8PCS	 H2 4PCS	 I 2PCS

Step 1

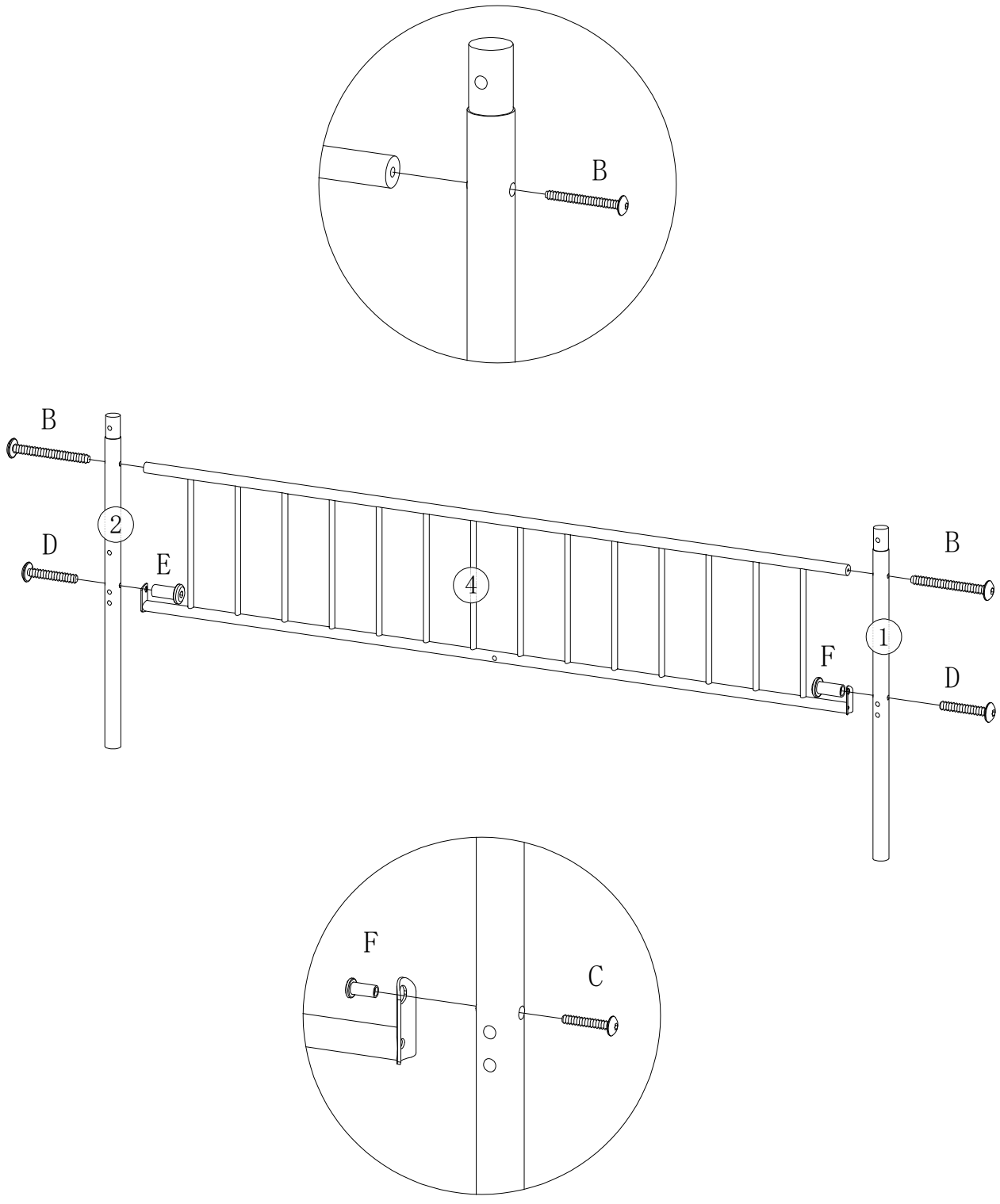

 B M6*45mm--4PCS	 D M6*20mm--4PCS	 F M6*17mm--4PCS	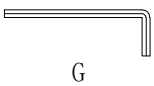 G 4mm--2PCS	

Step 2

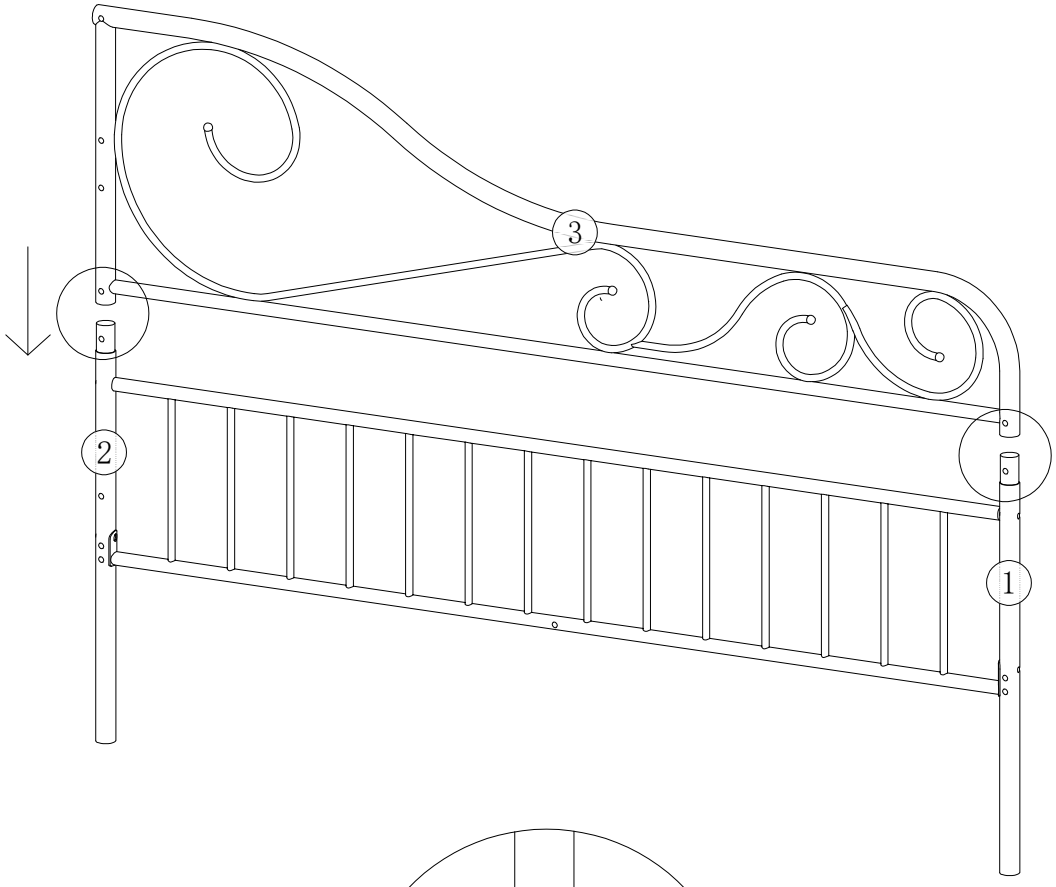

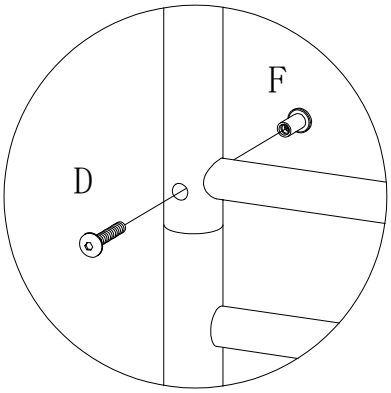

 D M6*20mm--4PCS	 F M6*17mm--4PCS	 G 4mm--2PCS		

Step 3

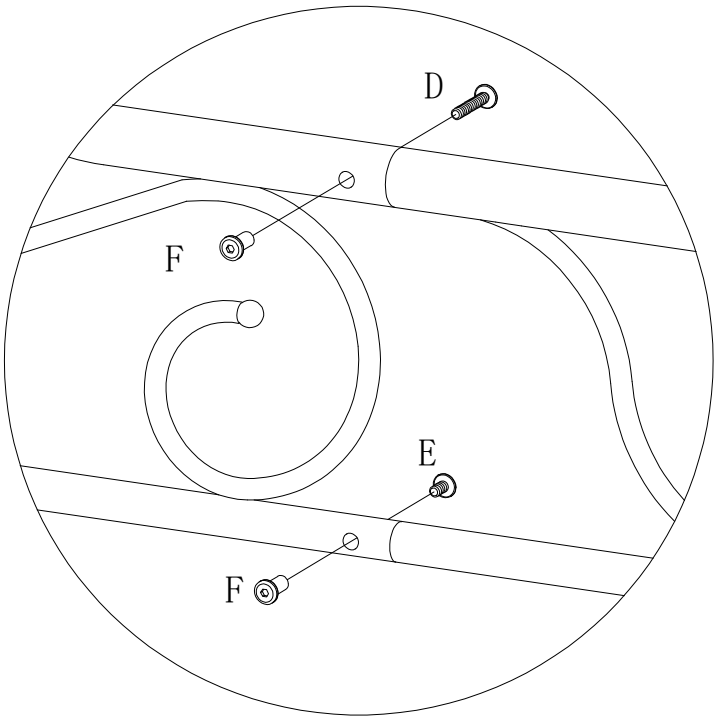

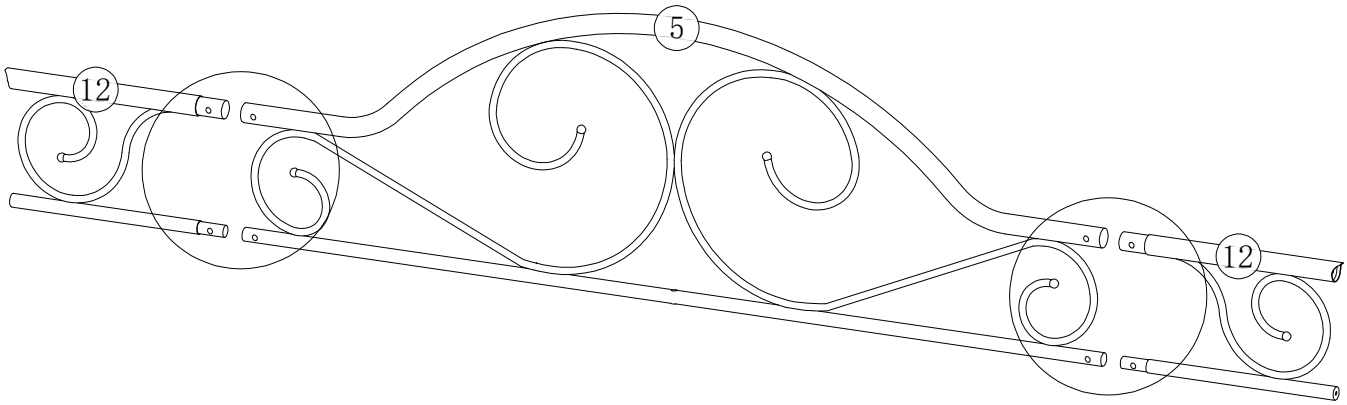

 D M6*20mm--2PCS	 E M6*10mm--2PCS	 F M6*17mm--4PCS	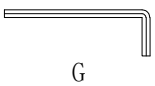 G 4mm--2PCS	

Step 4

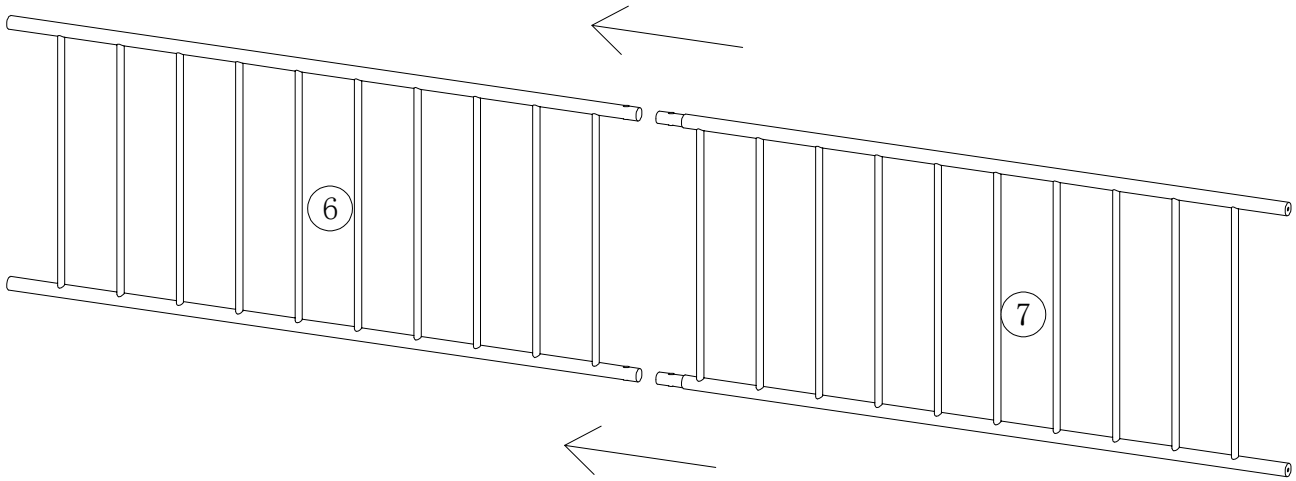

Step 5

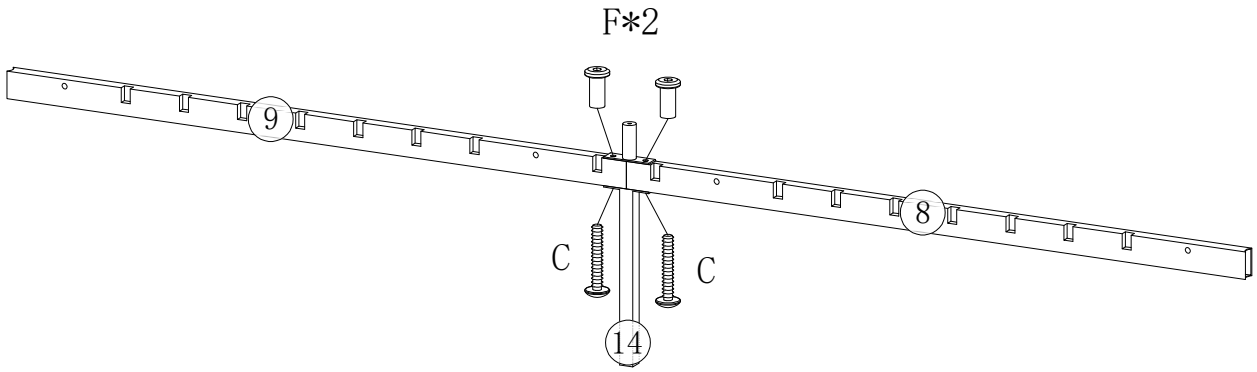

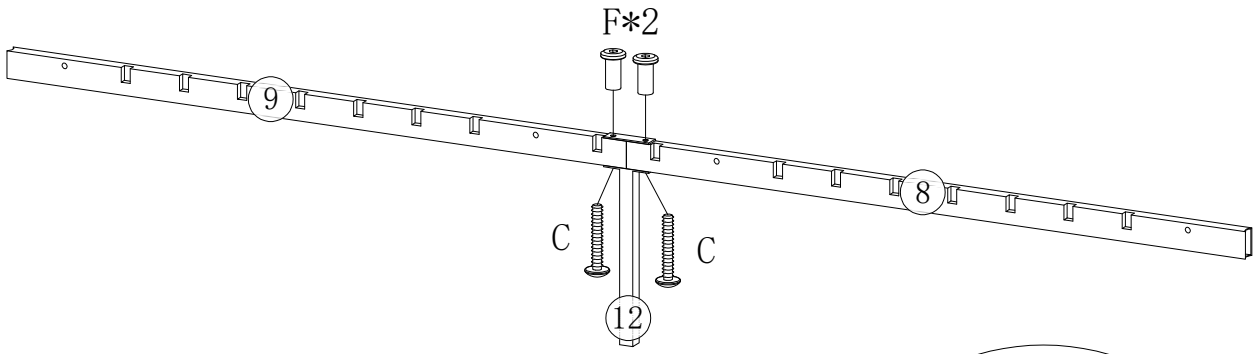

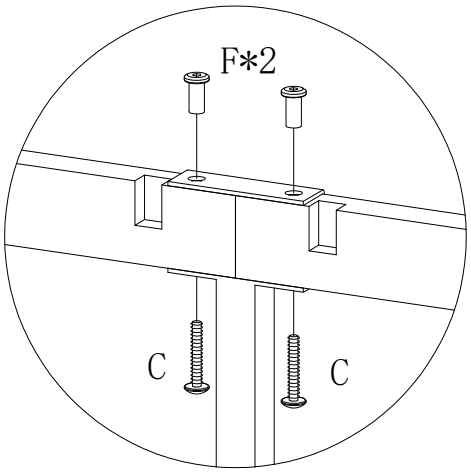

 C M6*35mm--4PCS	 F M6*17mm--4PCS	 G 4mm--2PCS		

Step 6

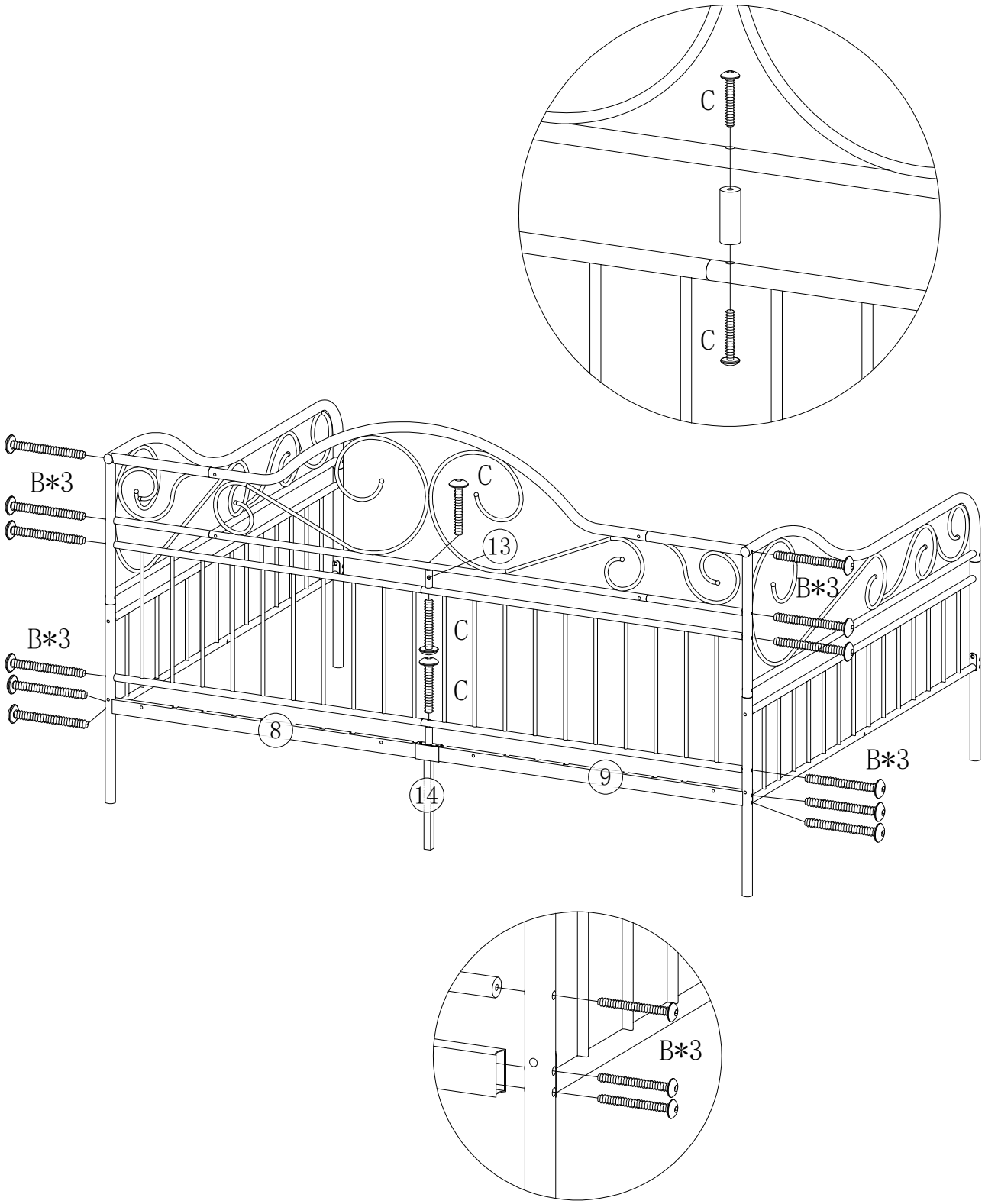

B M6*45mm--12PCS	C M6*35mm--3PCS	E 4mm--1PCS		

Step 7

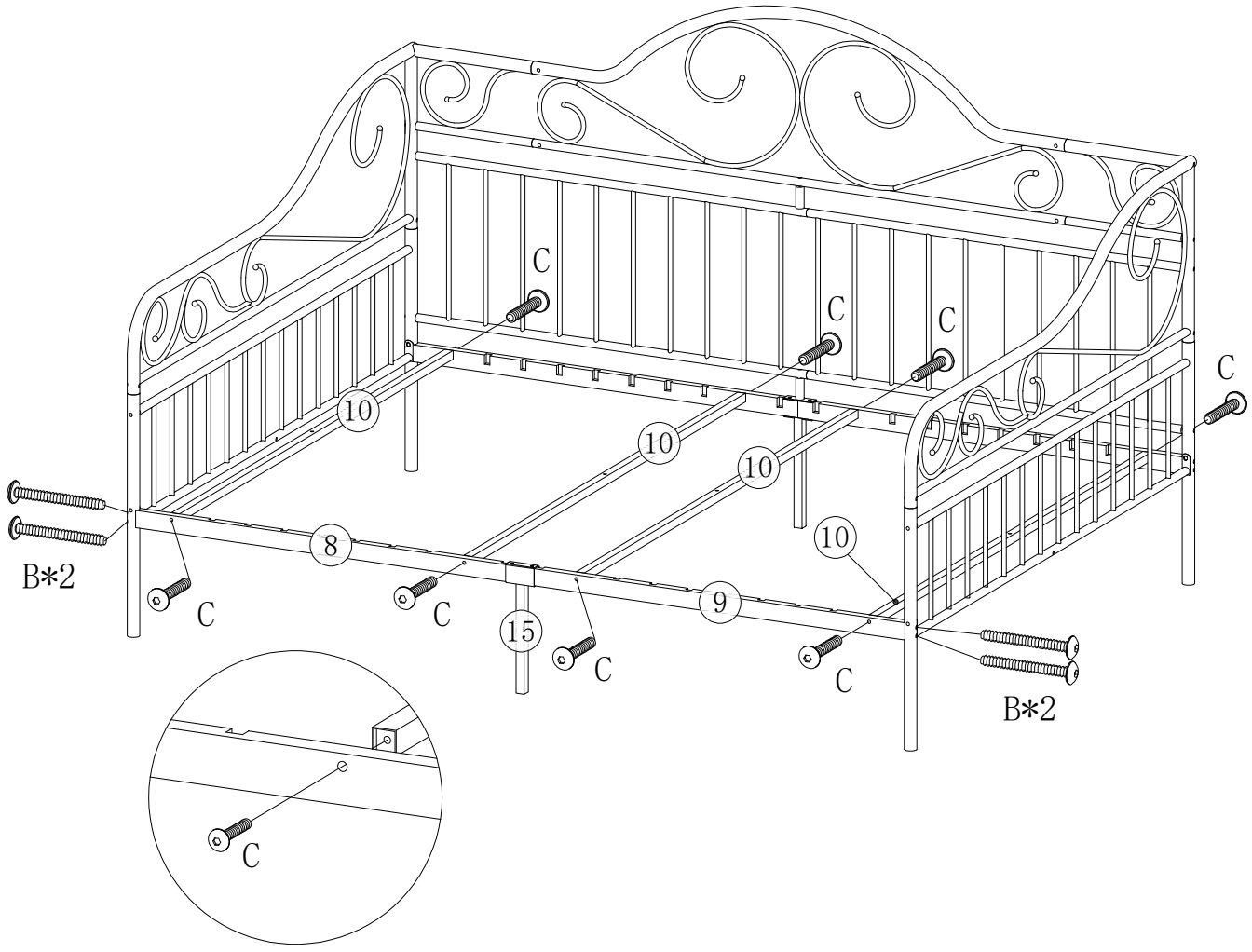

B M6*45mm--4PCS	C M6*35mm--8PCS	G 4mm--1PCS		

Step 8



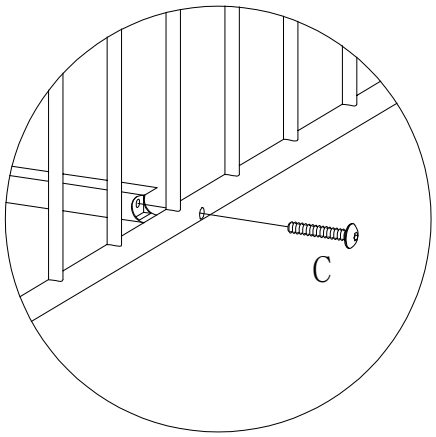

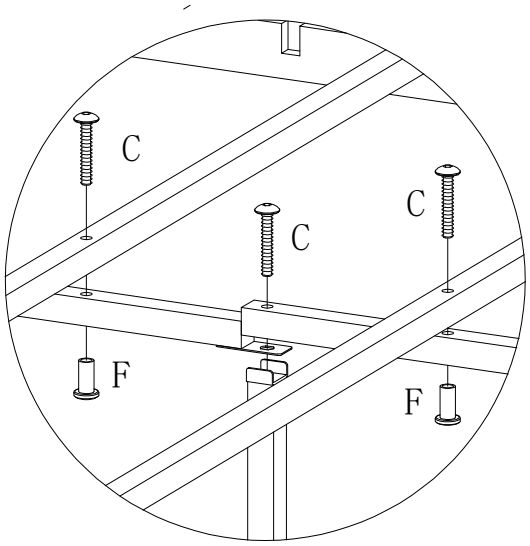

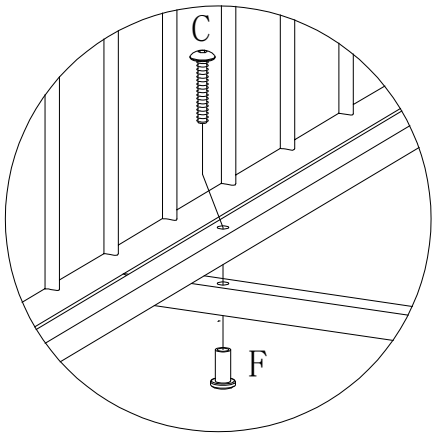

 C M6*35mm--7PCS	 F M6*17mm--4PCS	 G 4mm--2PCS		

Step 9



Step 10

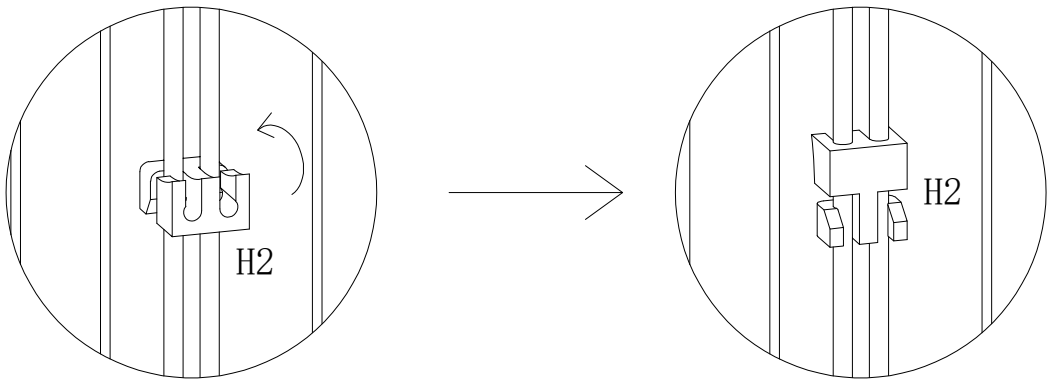

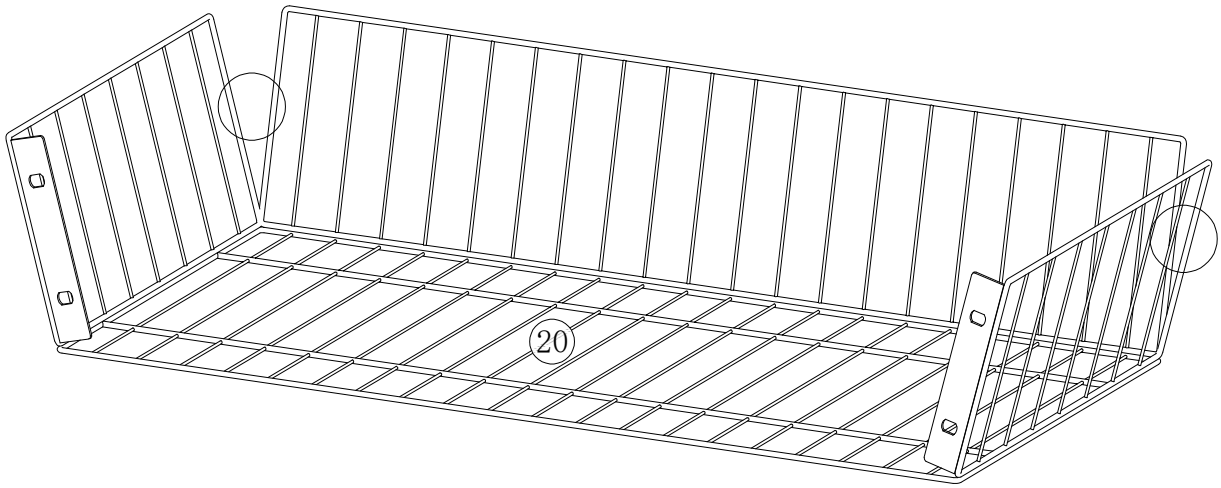

 H2 4PCS				

Step 11

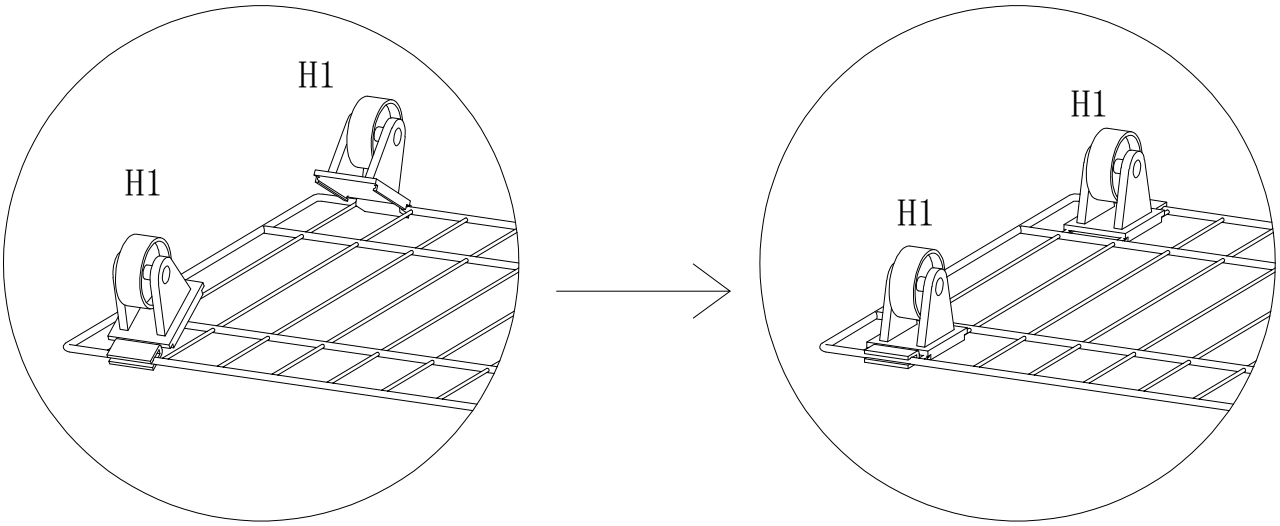

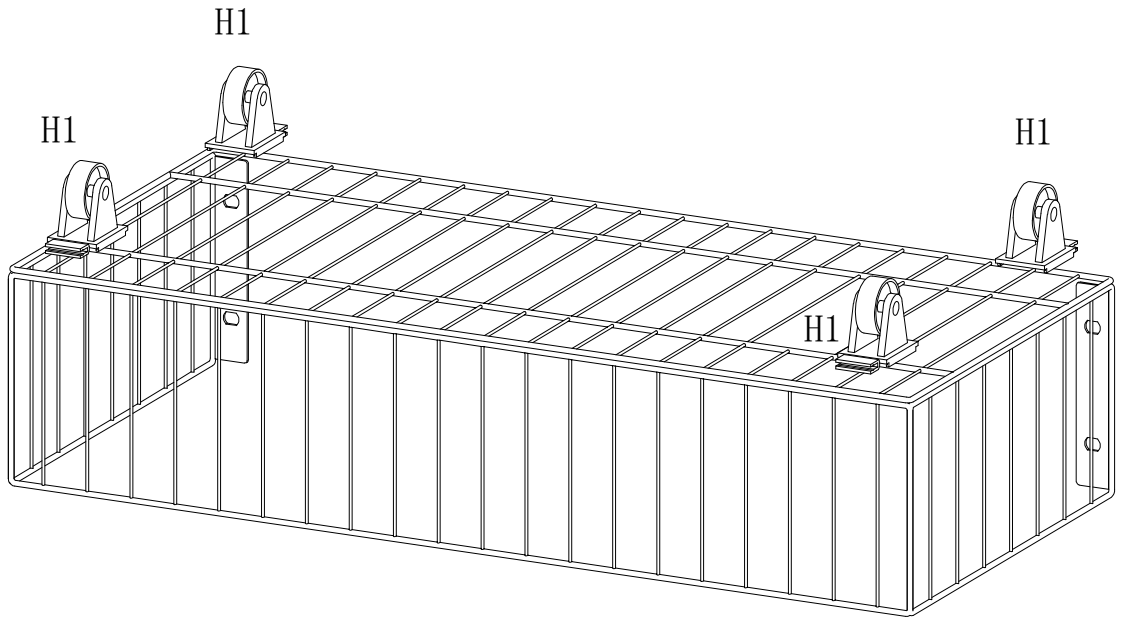

 H1 8PCS				

Step 12

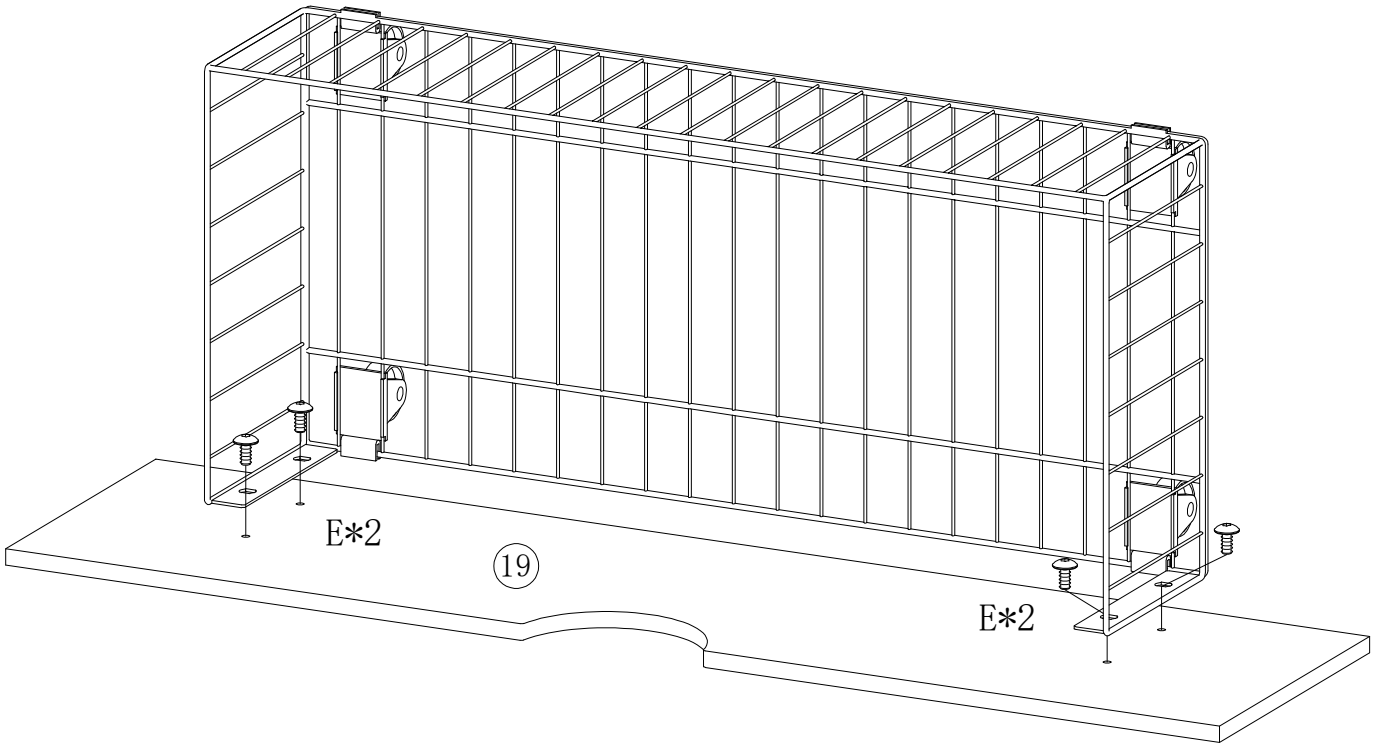

E M6*10mm--8PCS	G 4mm--1PCS			

Completed



Please tighten all screws before use, thank you.