Reception Table

Assembly Instruction

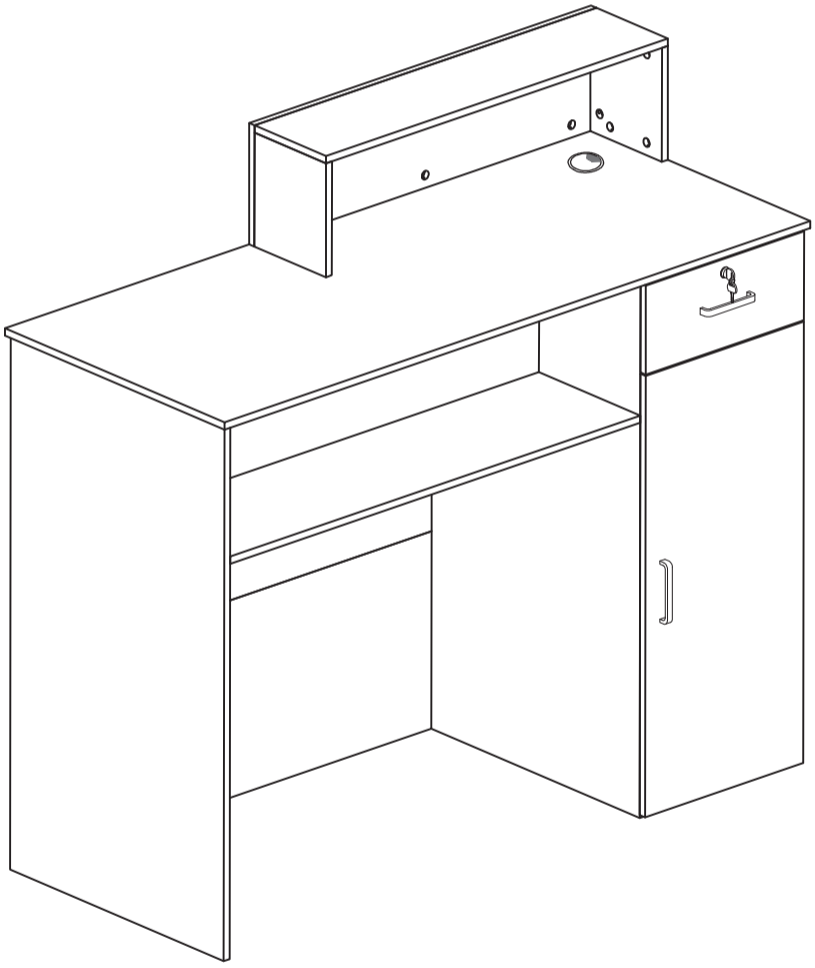

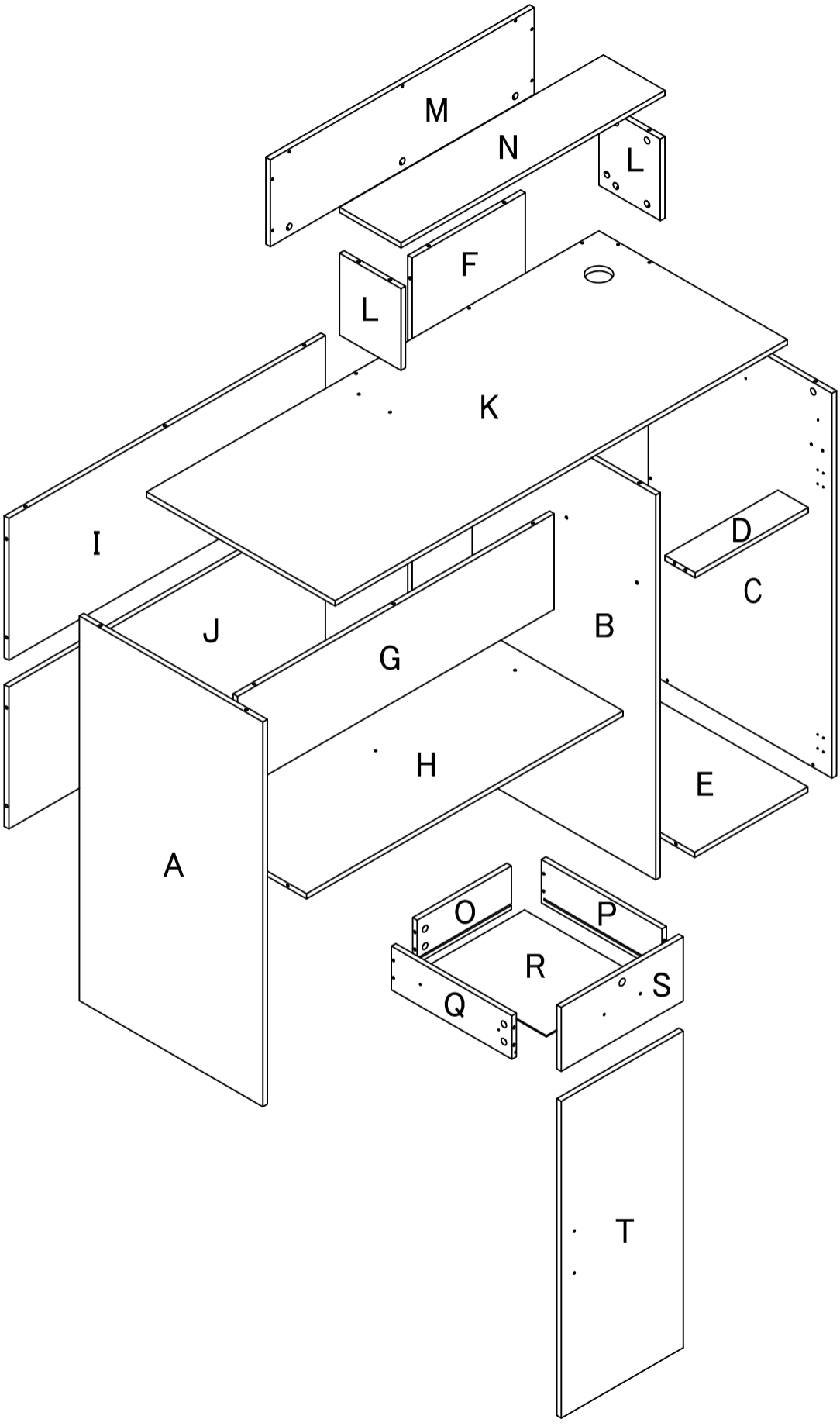
M
N
L
F
L
K
I
D
C
J
G
B
H
E
A
O
P
R
Q
S
T

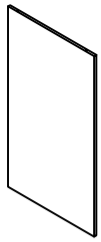	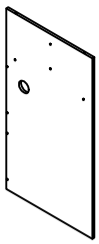	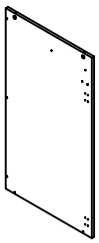	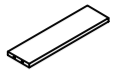
A×1	B×1	C×1	D×1
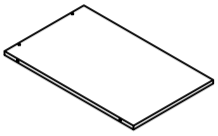	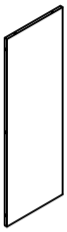	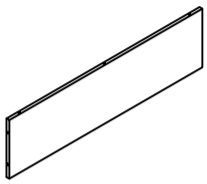	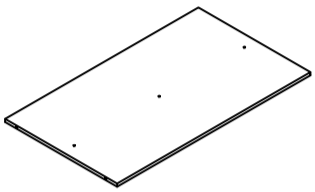
E×1	F×1	G×1	H×1
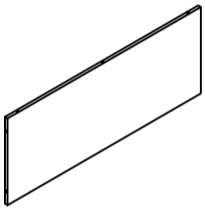	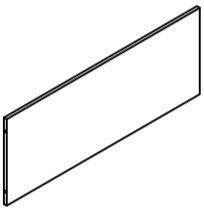	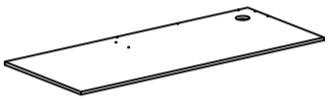	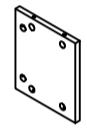
I×1	J×1	K×1	L×2
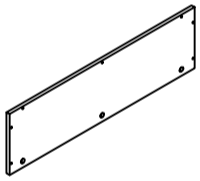	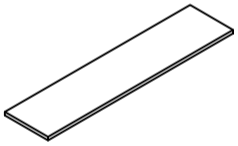	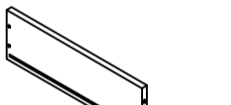	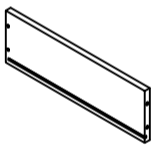
M×1	N×1	O×1	P×1
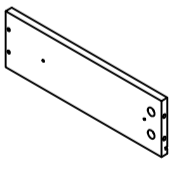	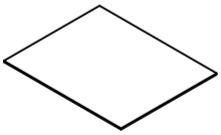	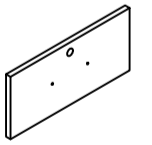	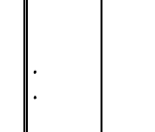
Q×1	R×1	S×1	T×1

⚠WARNING



Children have died from furniture tipover. To reduce the risk of furniture tipover:

- ALWAYS install tipover restraint provided.
- NEVER put a TV on this product.
- NEVER allow children to stand, climb or hang on drawers, doors, or shelves.
- NEVER open more than one drawer at a time.
- Place heaviest items in the lowest drawers.
- Do not defeat or remove the drawer interlock system.

This is a permanent label.
Do not remove!

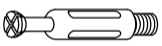			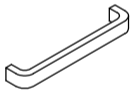
a×75pcs	b×75pcs	c×4pcs	d×2pcs
	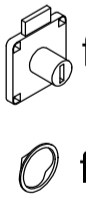	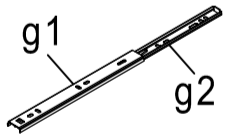	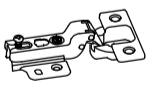
e×26pcs	f×1set	g×1set	h×2
			
i×2pcs			

Installation Method for Connecting boards

1

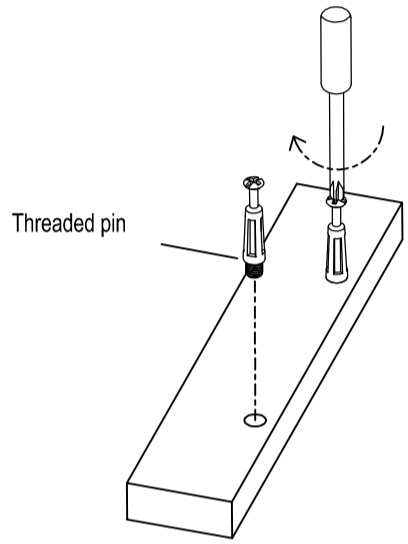

2

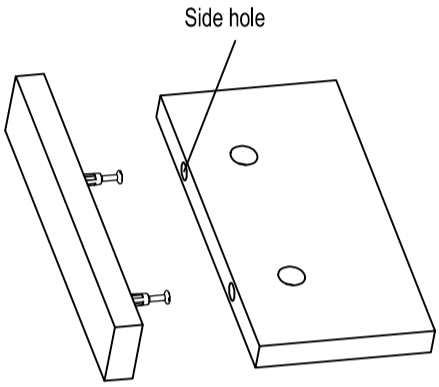

3

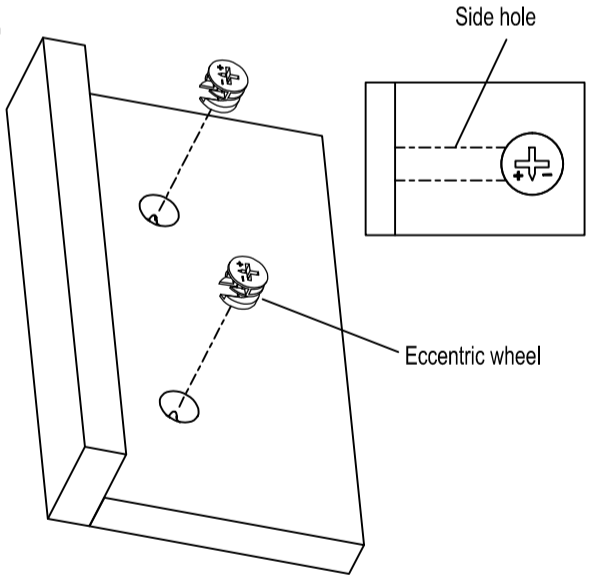

4

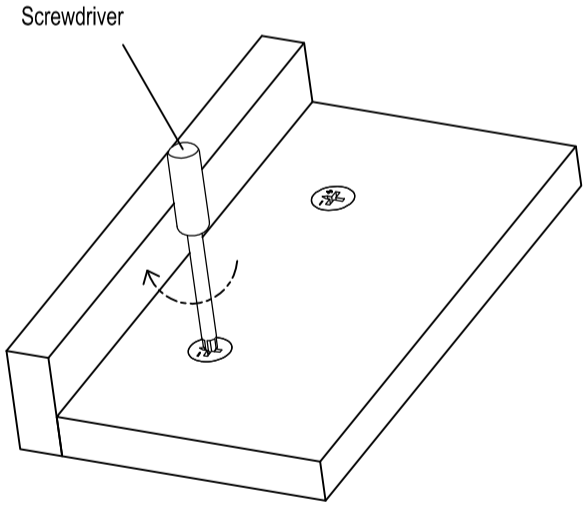

1

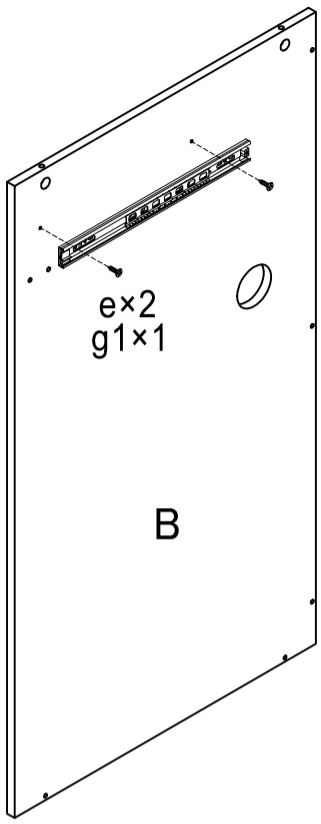

e×2	g1×1

2

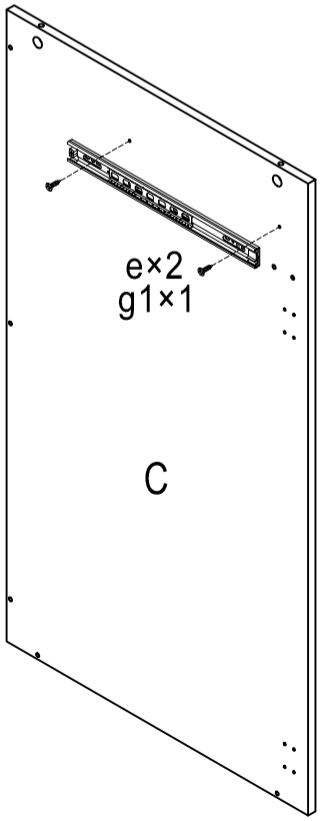

e×2	g1×1

3

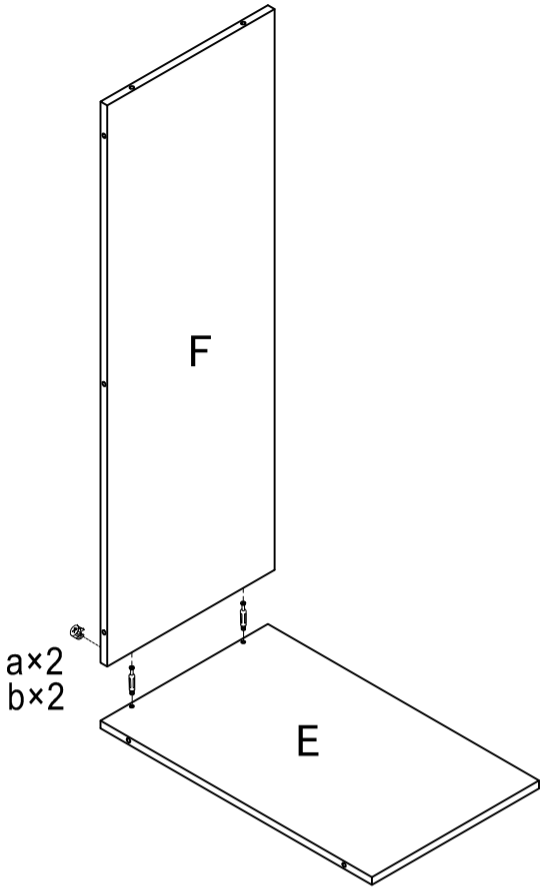

a×2	b×2

4

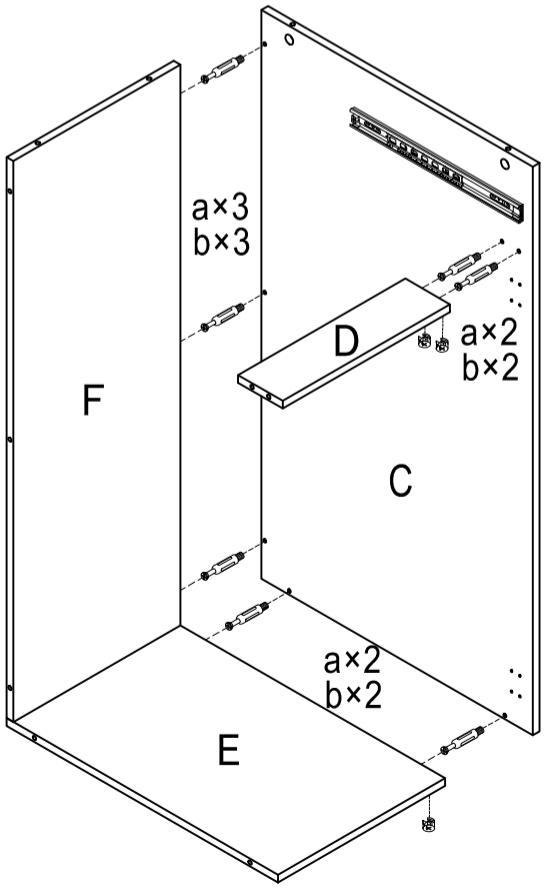

a×7	b×7

5

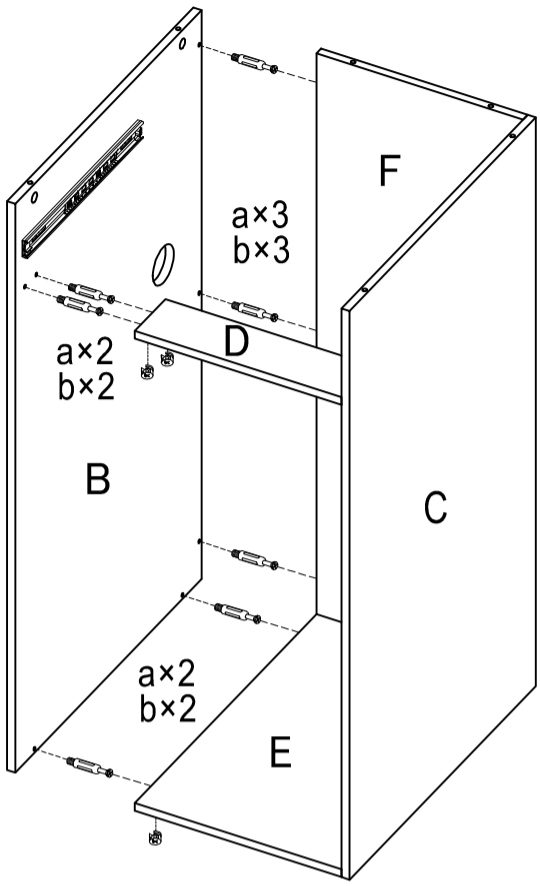

a×7	b×7

6

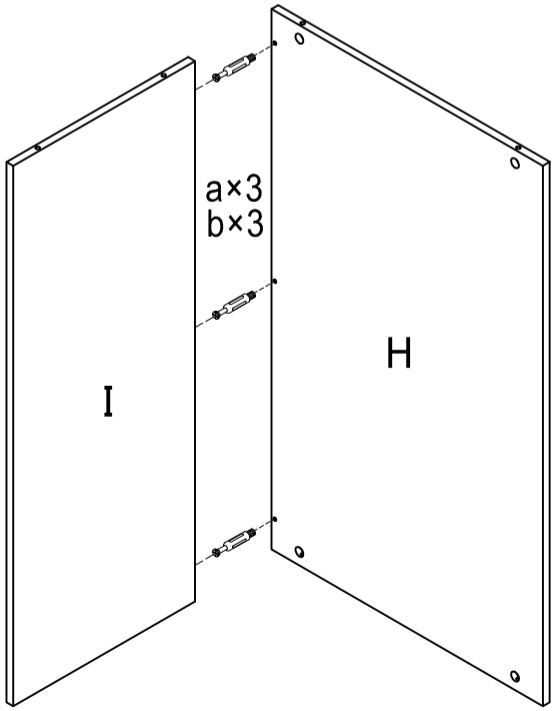

a×3	b×3

7

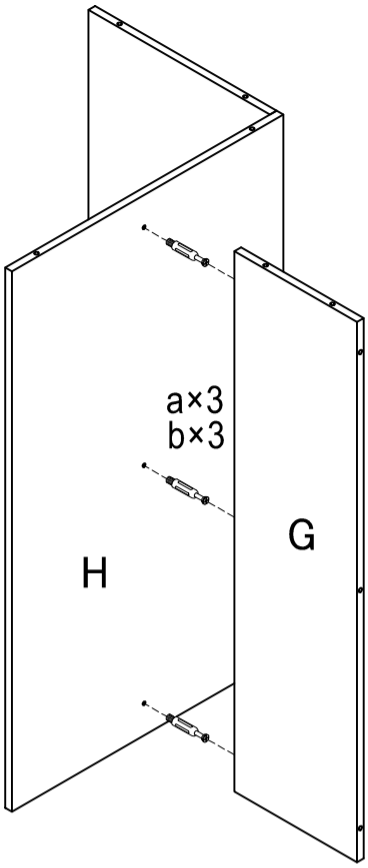

a×3	b×3

8

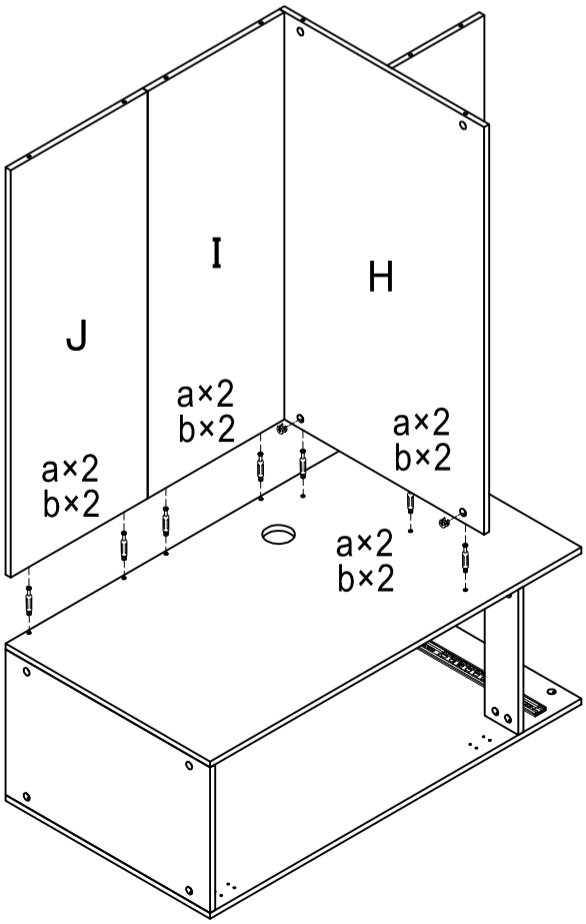

a×8	b×8

9

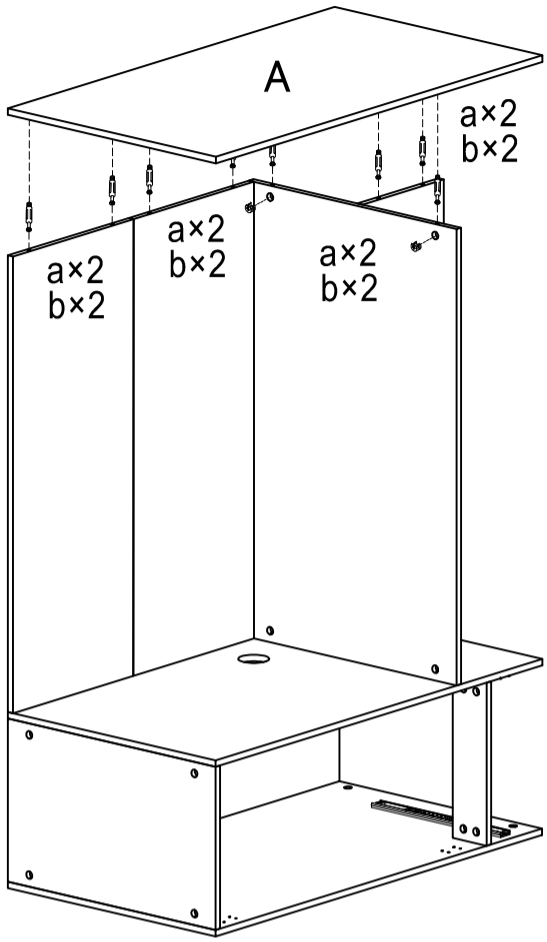

a×8	b×8

10

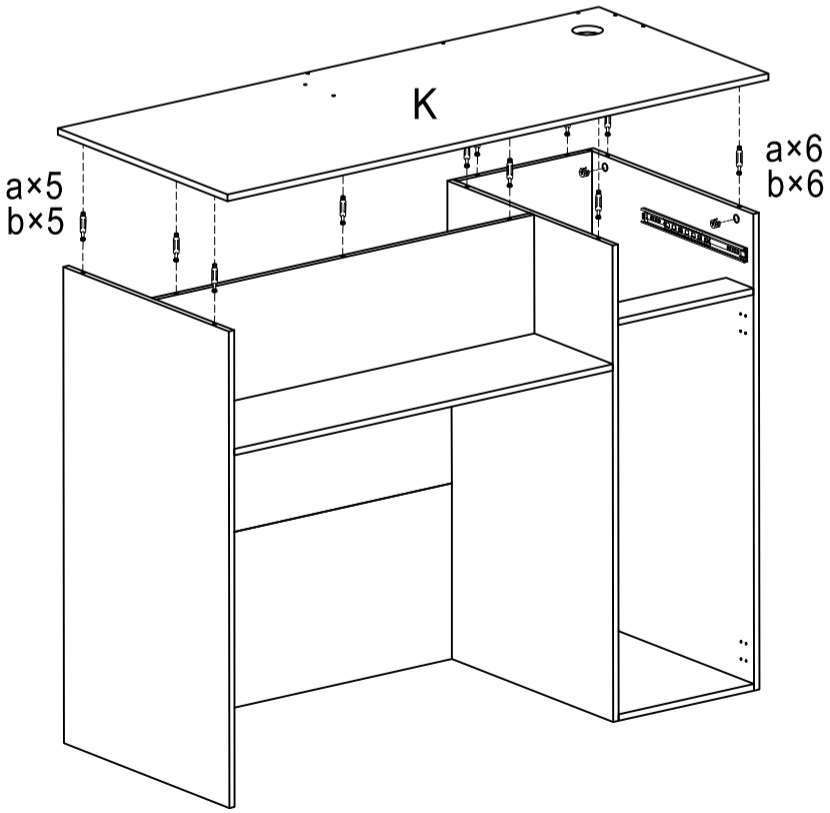

a×11	b×11

11

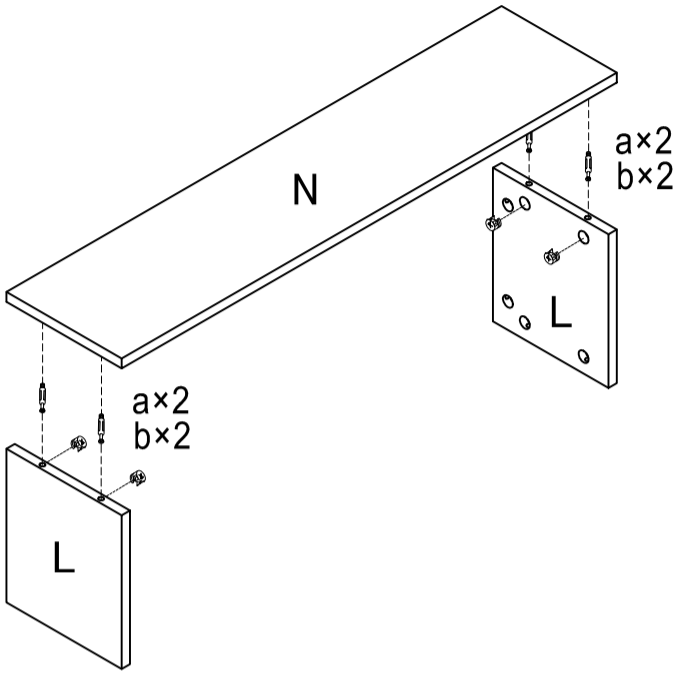

a×4	b×4

12

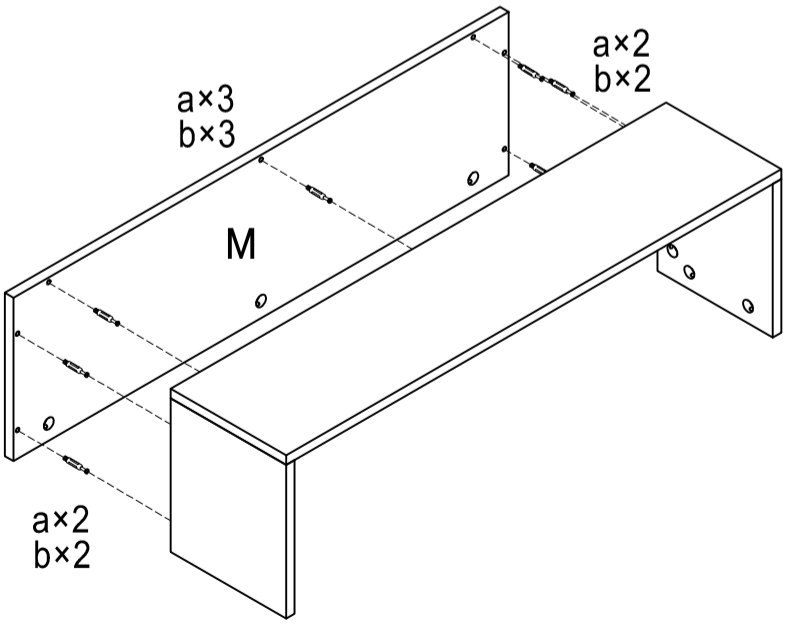

a×7	b×7

13

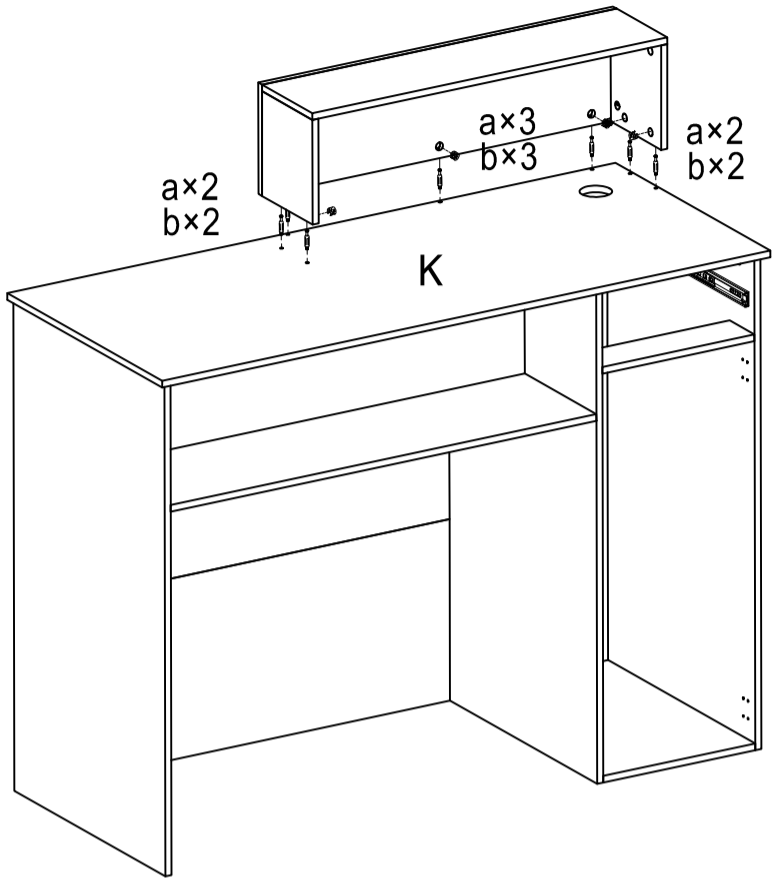

a×7	b×7

14

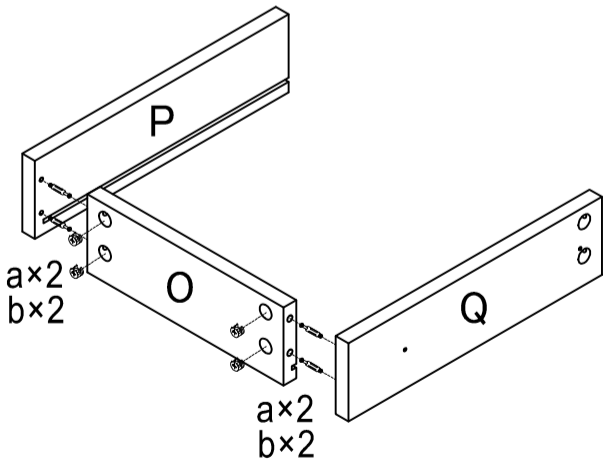

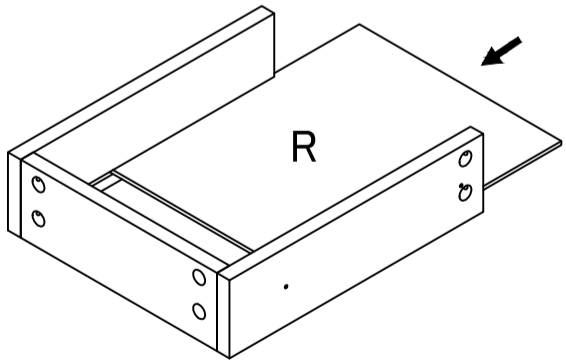

a×4	b×4

15

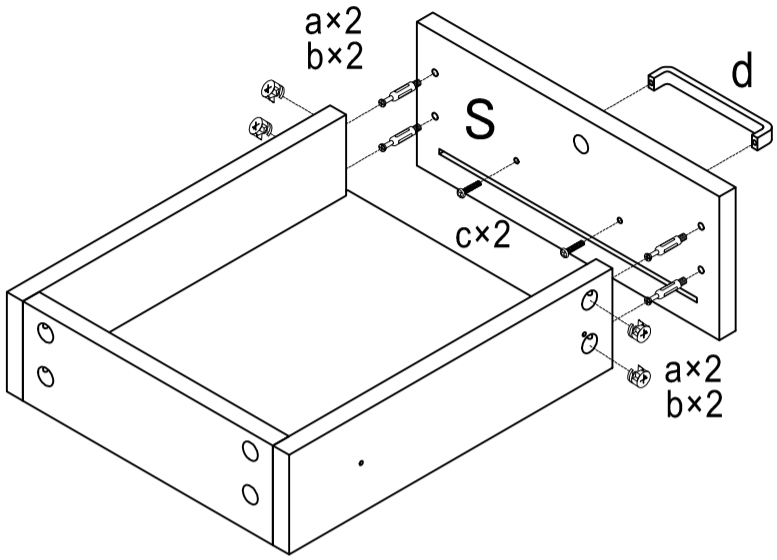

a×4	b×4	c×2	d×1

16

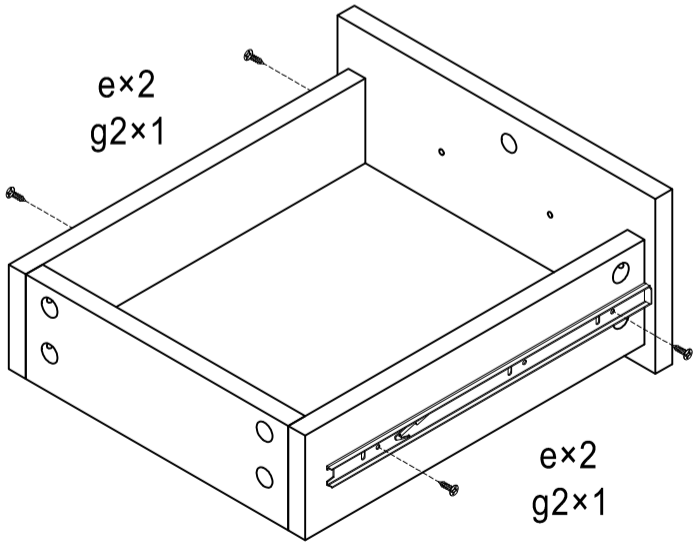

e×4	g2×2

17

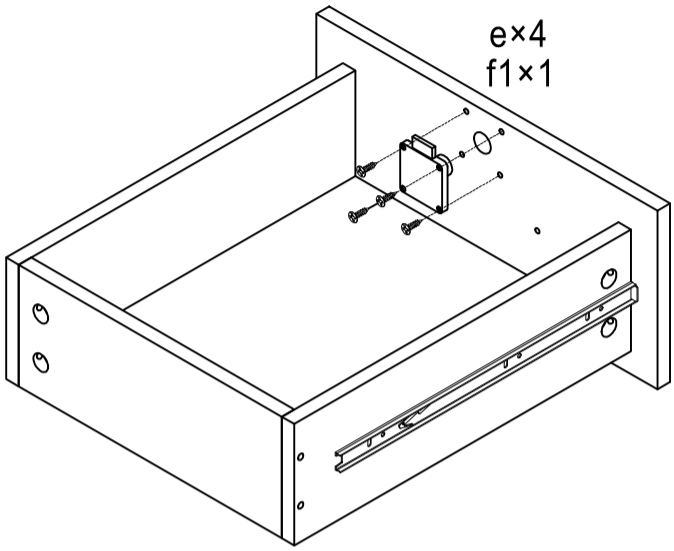

e×4	f1×1

18

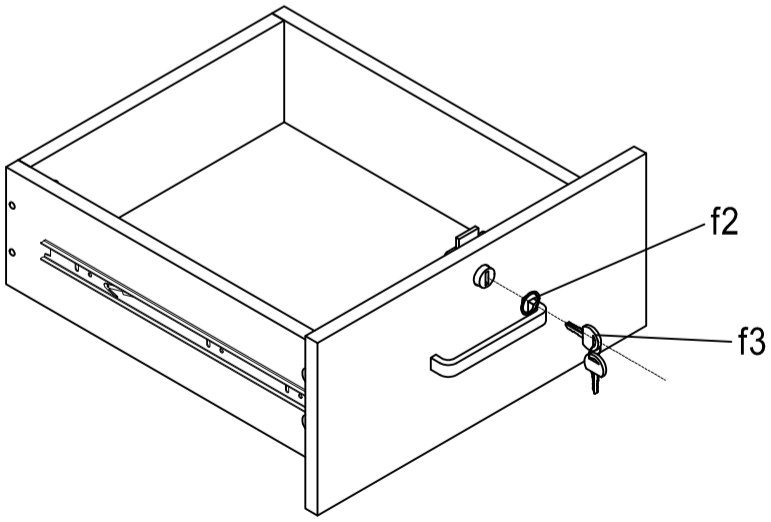

f2×1	f3×1

19

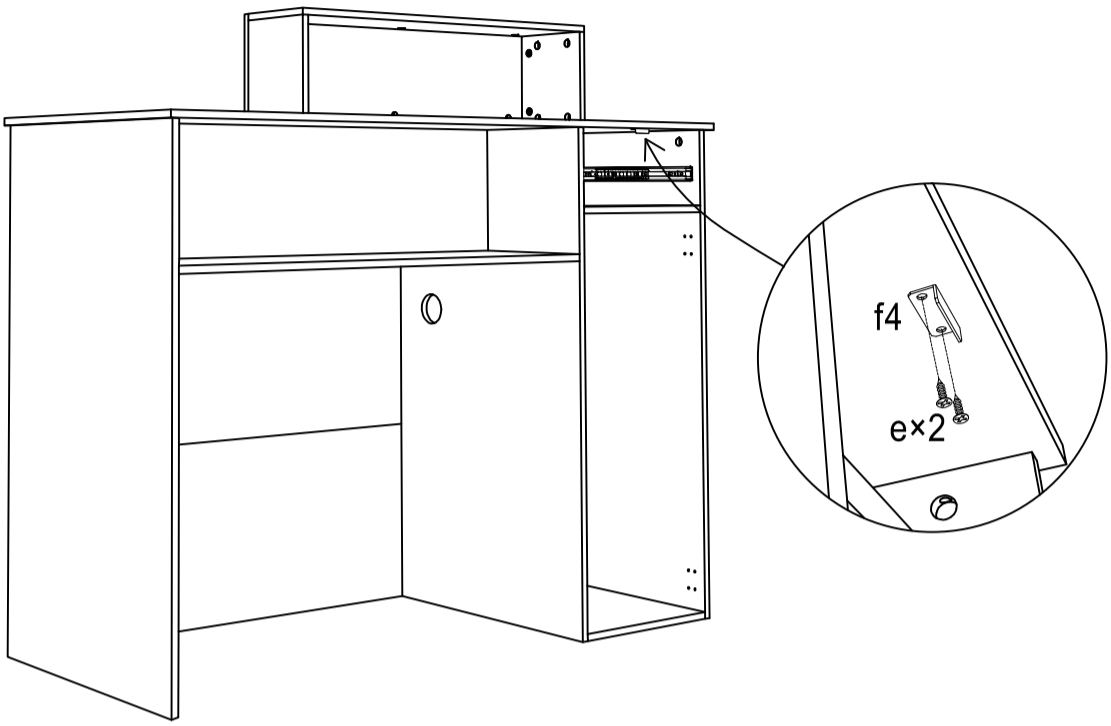

e×2	f4×1

20

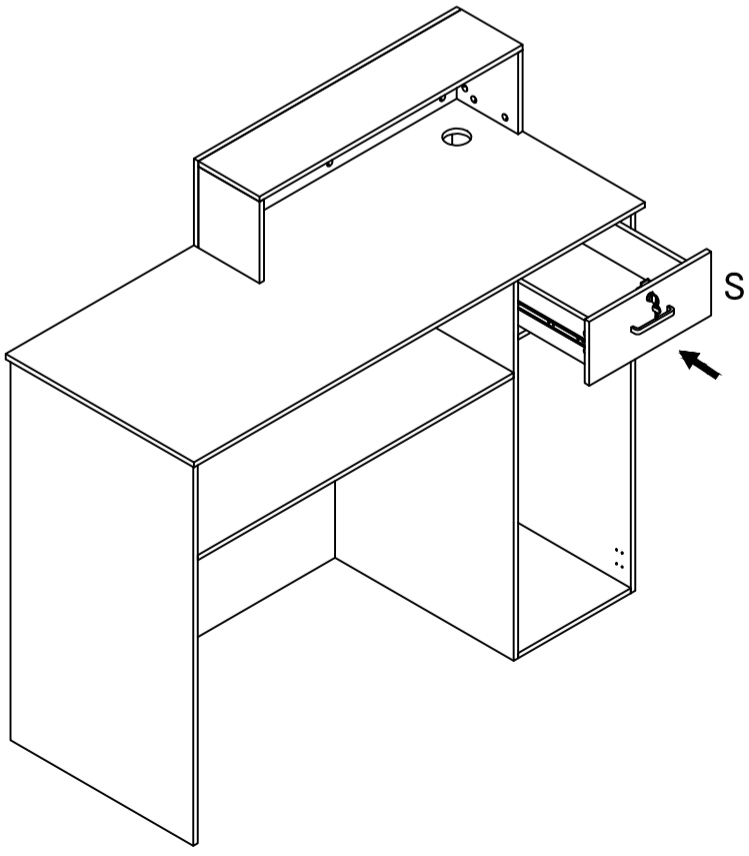

21

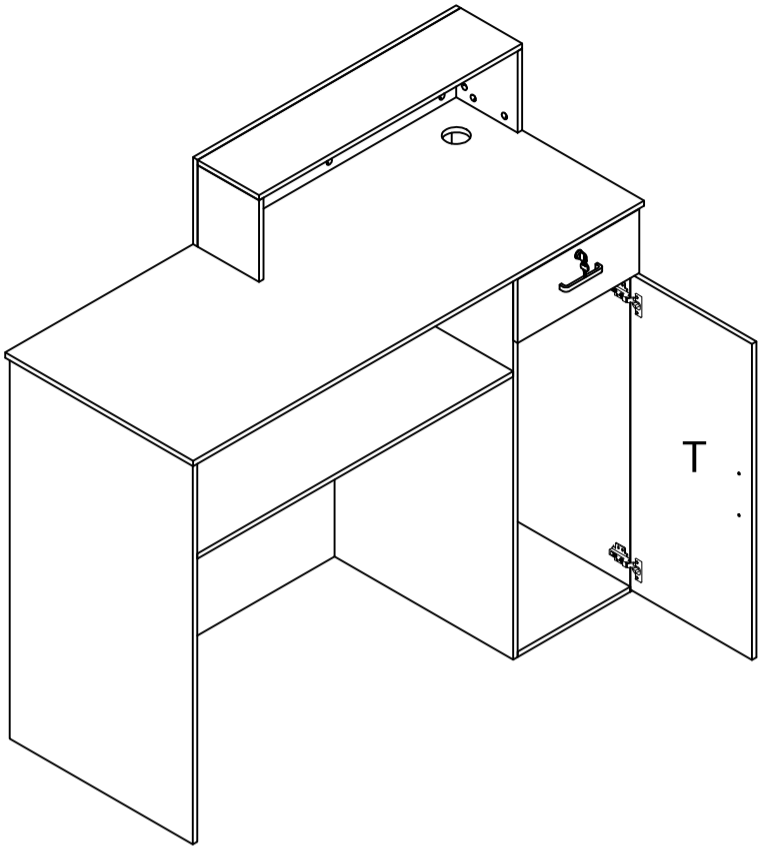

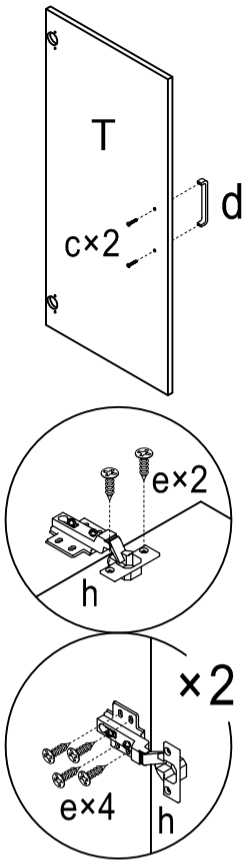

c×2	d×1	e×12	h×2

22

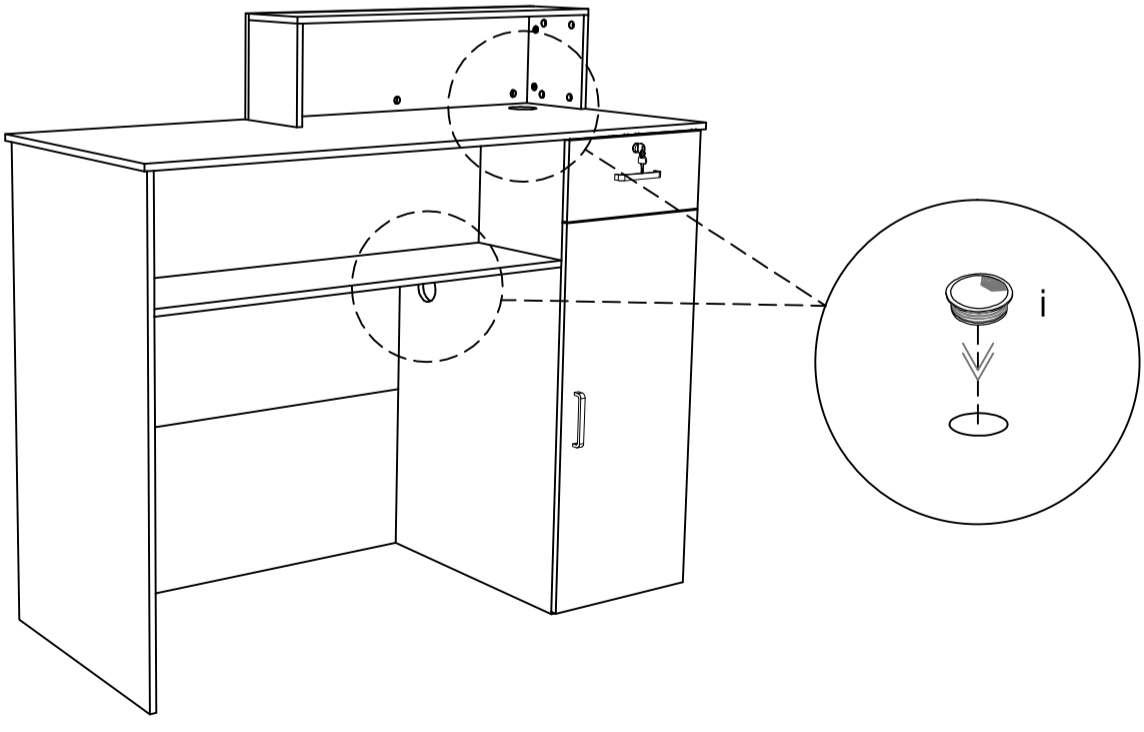

i×2