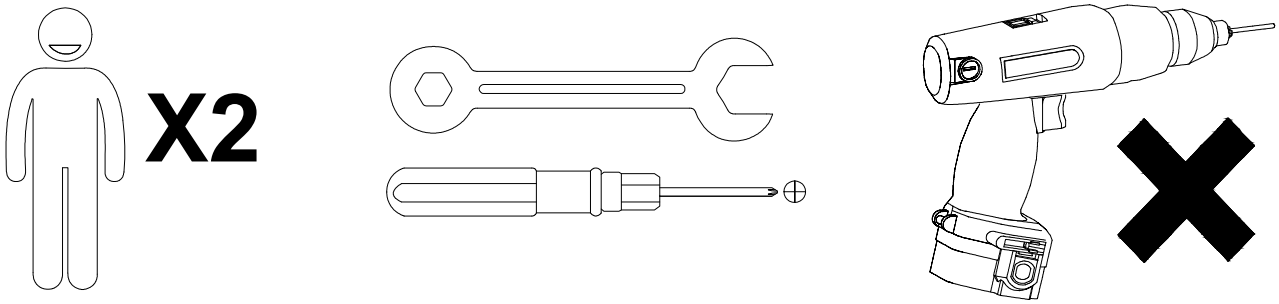

We recommend using hand tools for assembly.
If an electric screwdriver is used, reduce power and torque to avoid damage to the product.

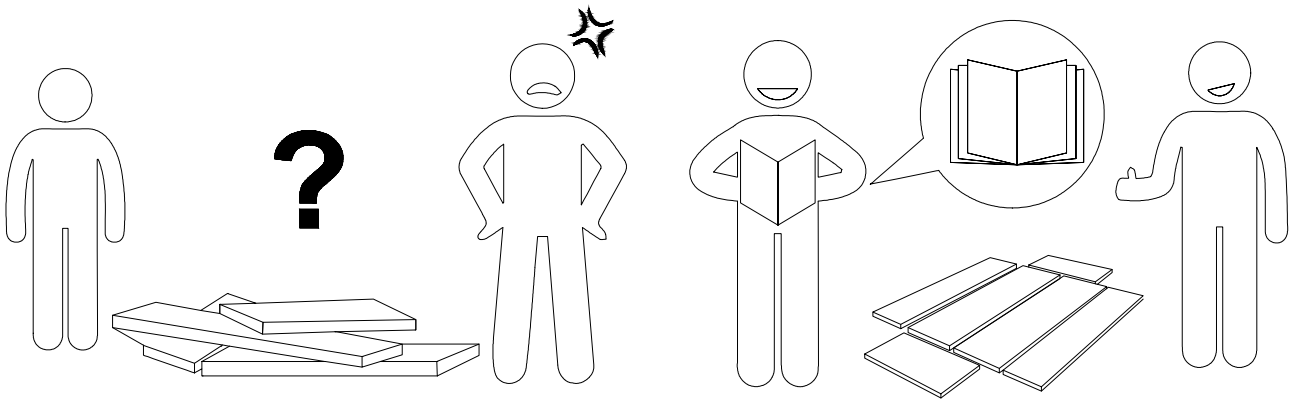

Install the Anti-Tip Straps

Using the anti-tip straps can reduce the risk of tipping over, but can not eliminate it.

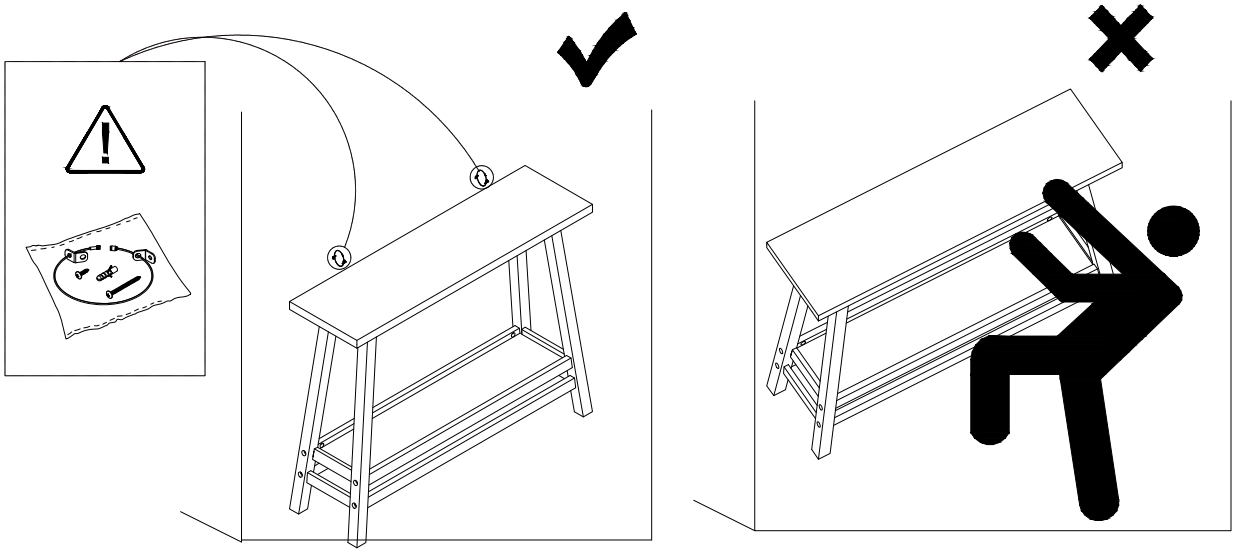

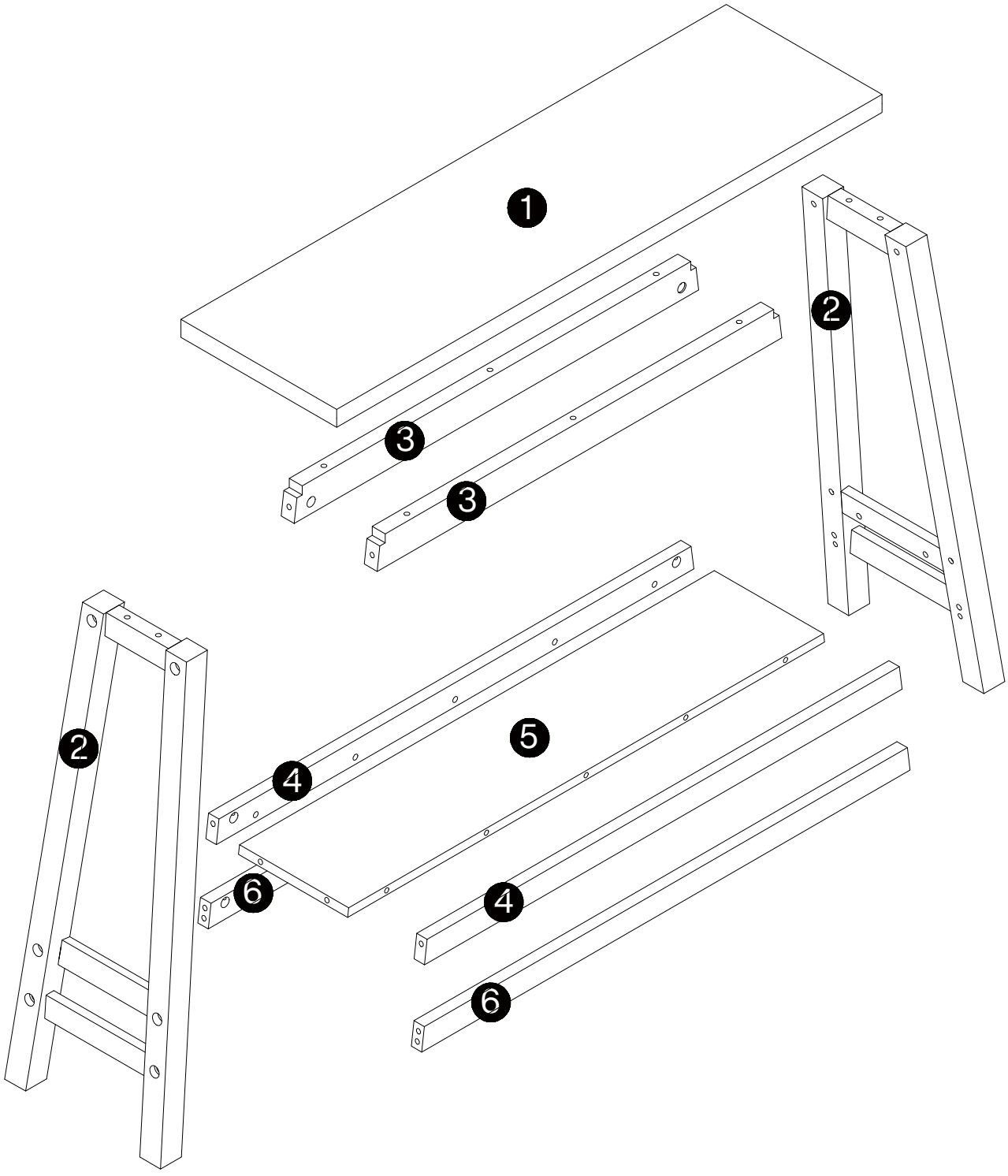

⚠ Caution

Make sure all parts are included. Most board parts are labeled or stamped on the raw edge. Contact us for a free replacement if you encounter any damaged or missing parts.

Parts List

❶

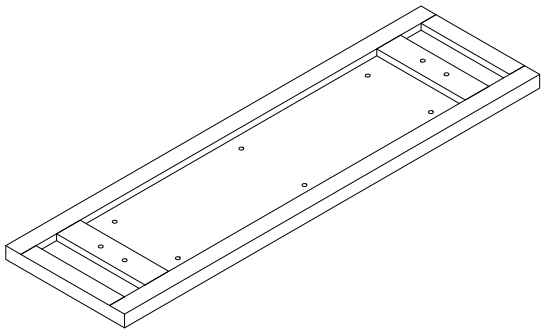

1 pc

❷

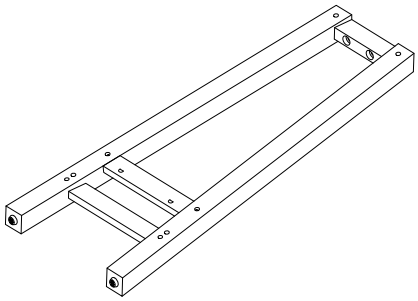

2 pcs

❸

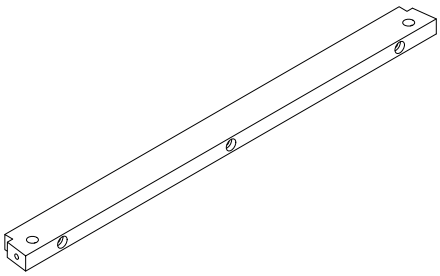

2 pcs

❹

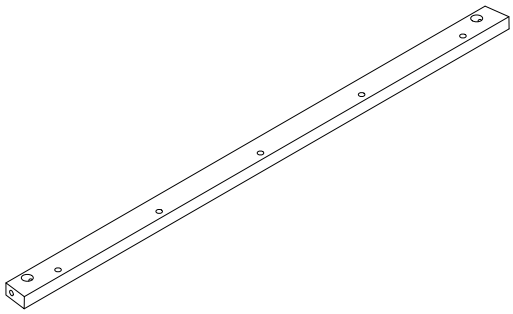

2 pcs

❺

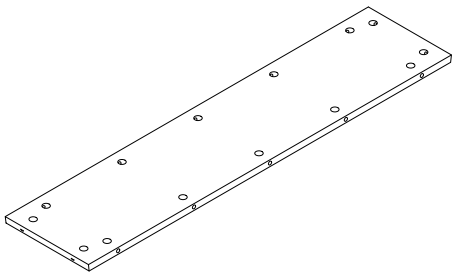

1 pc

❻

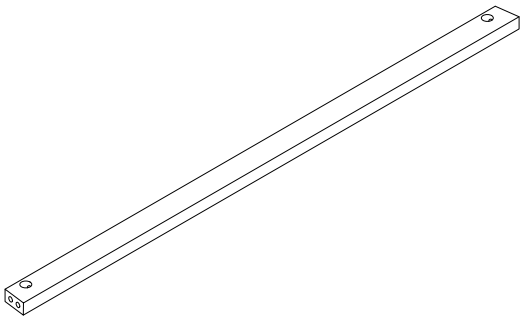

2 pcs

Hardware List

A	B	C	D	E	F
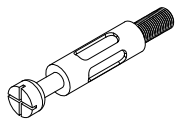	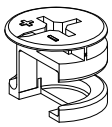	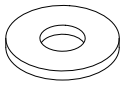			
M6x35mm	Ø15x12mm	Ø 16	Ø 11	M6x45mm	M6x55mm
14 pcs	14 pcs	22 pcs	10 pcs	4 pcs	6 pcs

G	H	I	J	K	L
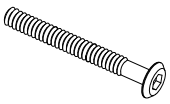	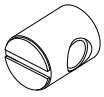			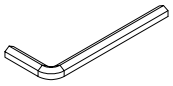	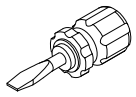
M6x70mm	M6x15mm	Ø20mm	Ø8x30mm	M4	
12 pcs	12 pcs	36 pcs	4 pcs	1 pc	1 pc

M					
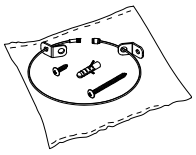					
2 pcs					

Installation of Cams and Pins

Read each step carefully before starting. Each step of instruction should be performed in the correct order. If these steps are not followed in sequence, assembly difficulties may occur.

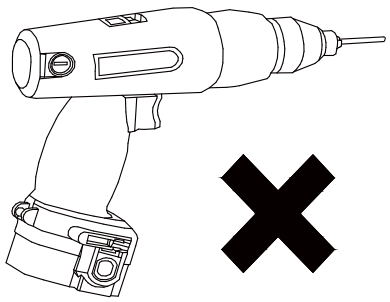

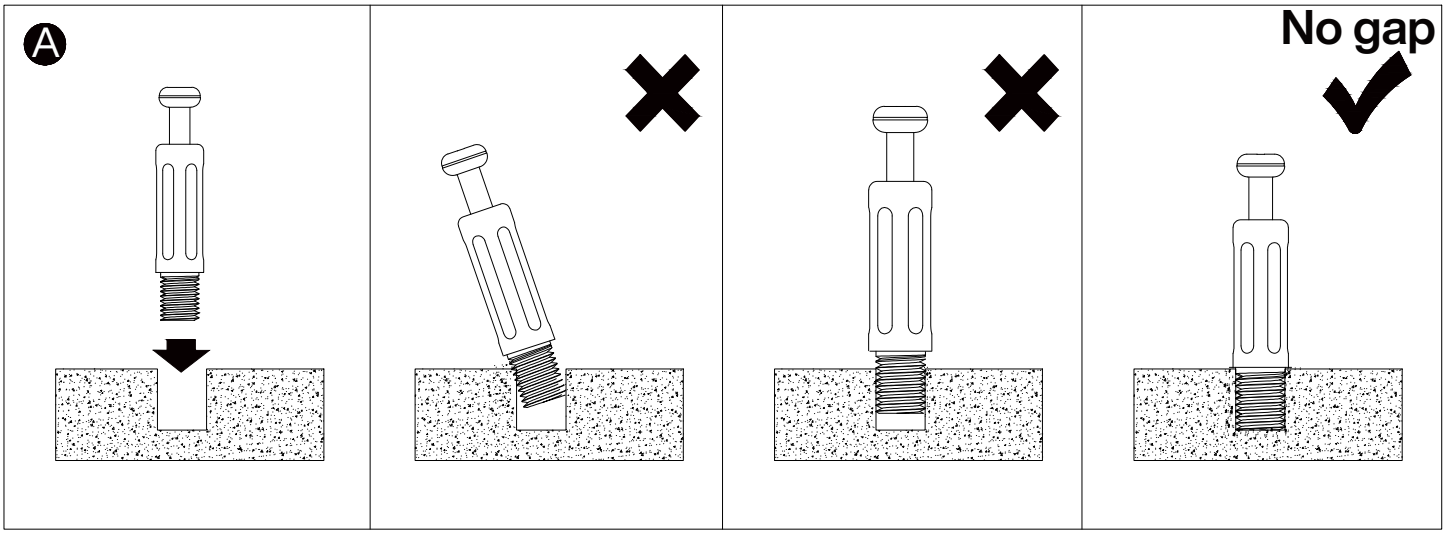

Screw the pin into the hole. Set the cams correctly by aligning the head of the cams with the lock pins.Lock the cam by turning the cam head with a screwdriver until it is tightened. Please do not use an electric screwdriver to assemble the unit.

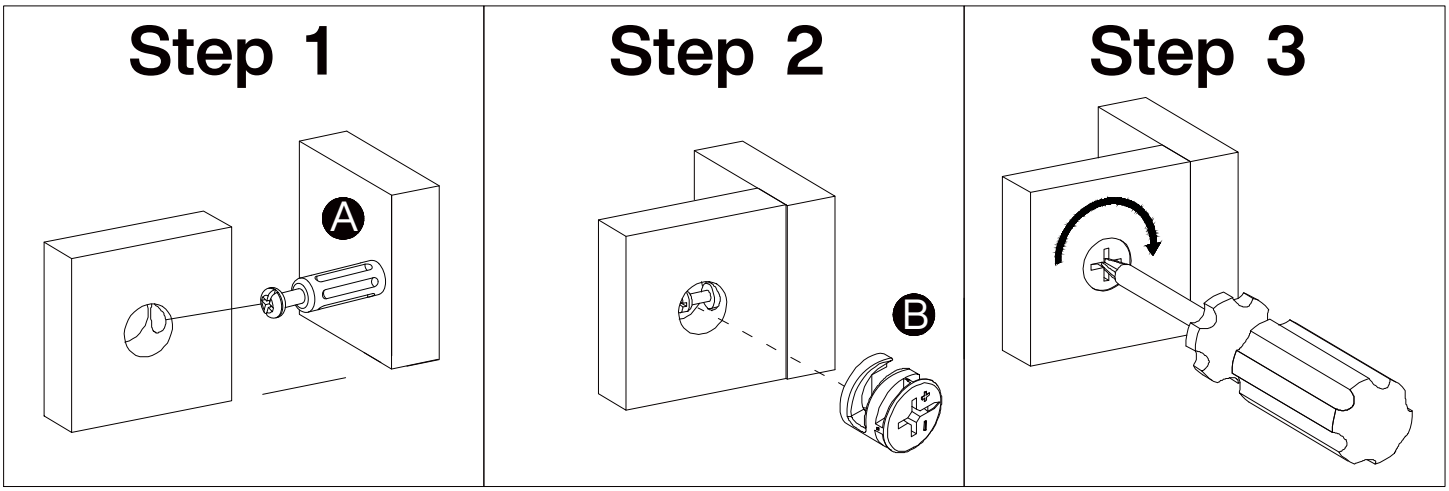

1

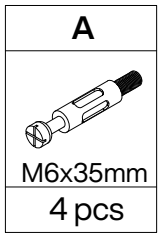
A
M6x35mm
4 pcs

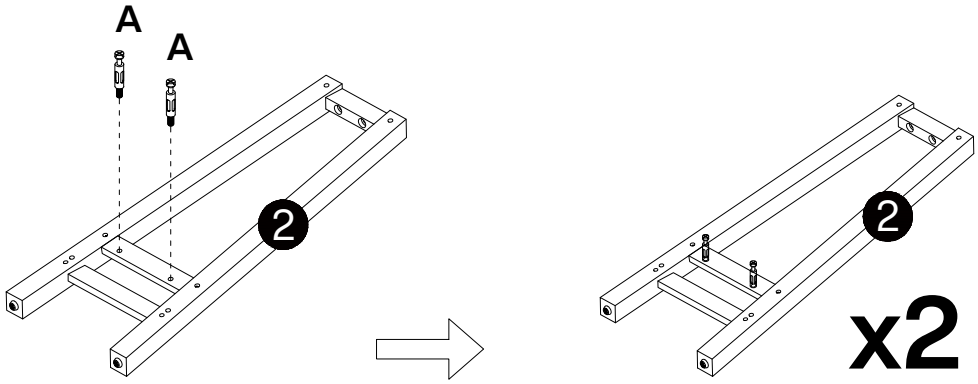
A
A
2
2
x2

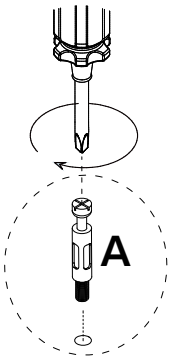
A

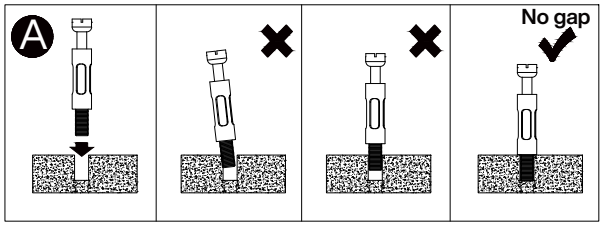
A
No gap

2

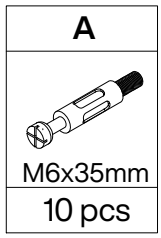
A
M6x35mm
10 pcs

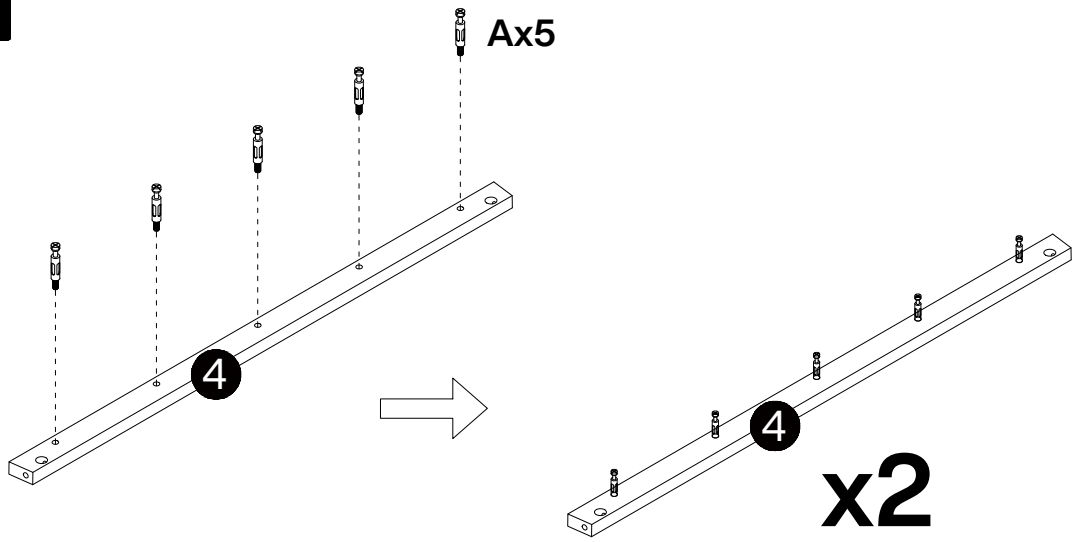
Ax5
4
4
x2

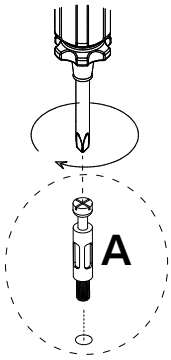
A

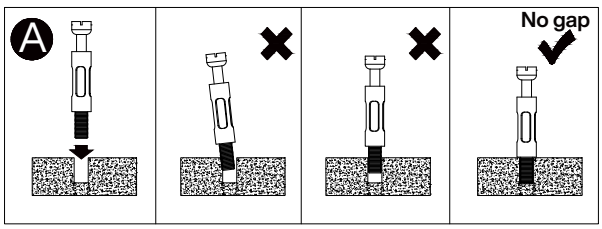
A
No gap

3

B

Ø15x12mm
10 pcs

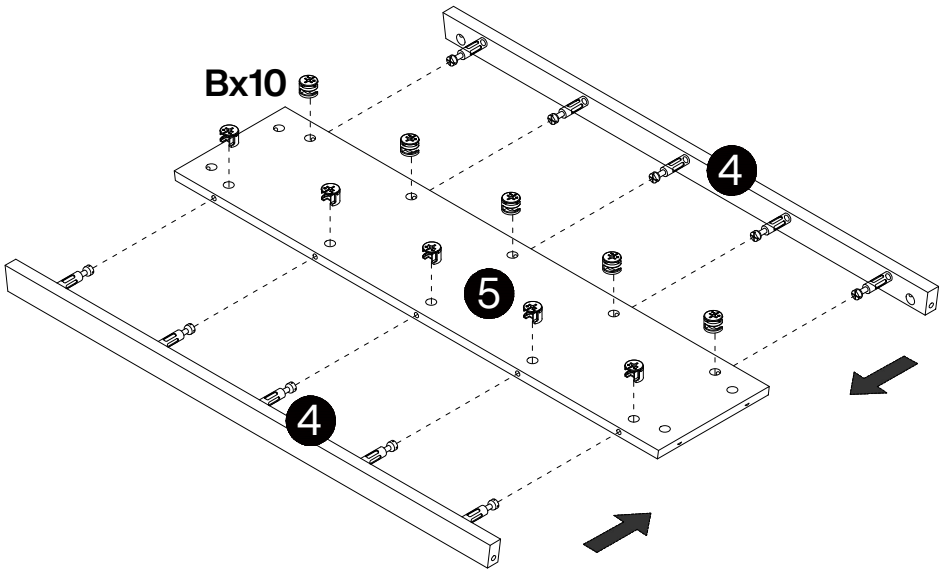

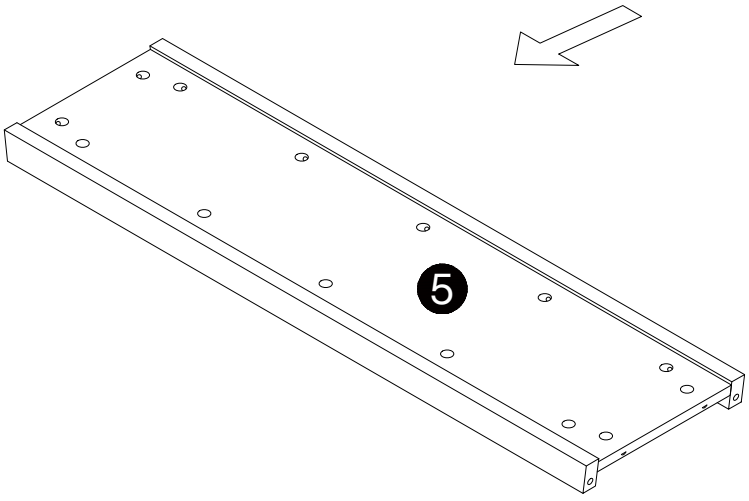

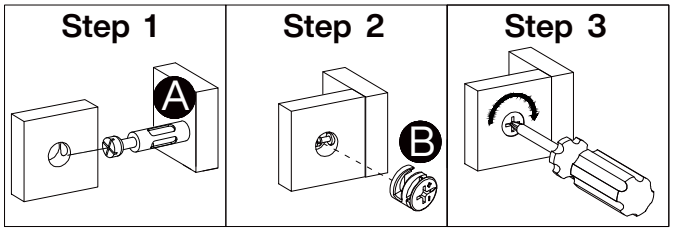

4

C	G	H	K	L
				
Ø 16	M6x70mm	M6x15mm	M4	
2 pcs	2 pcs	2 pcs	1 pc	1 pc

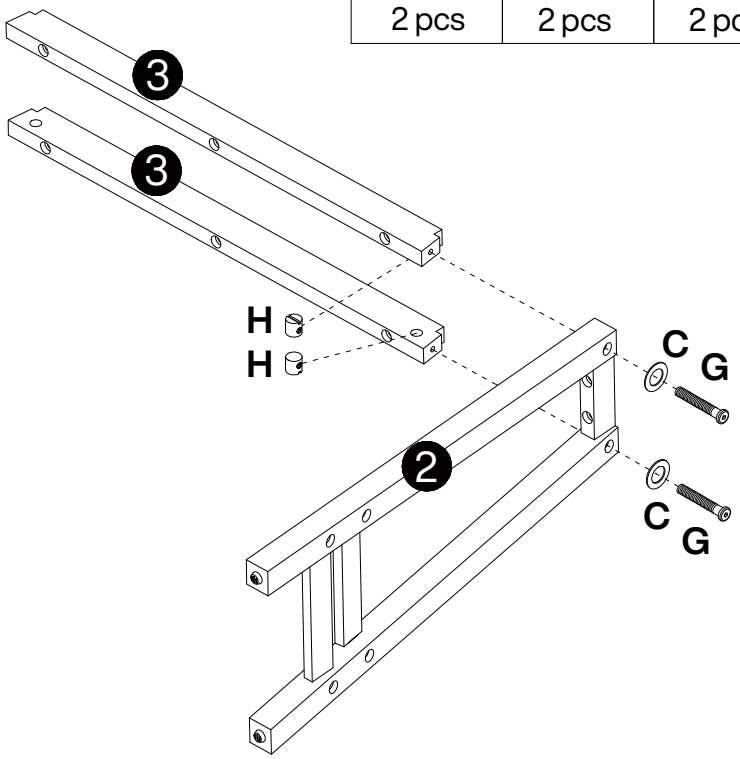

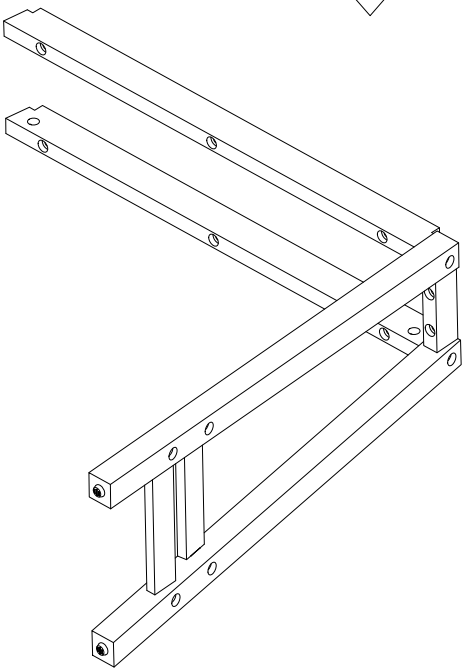

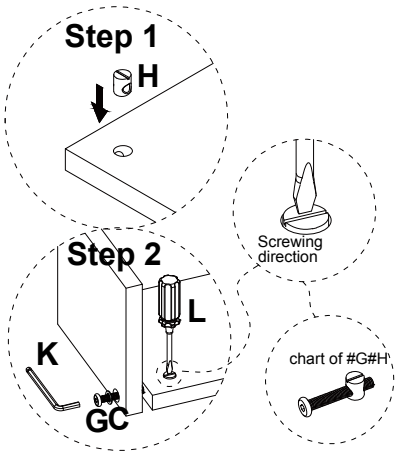

Step 1: Insert #H into the hole.
Step 2: Using a screwdriver, rotate #H until its groove aligns with #G. Lock in place by turning #G clockwise.

5

B	C	G	H
			
Ø15x12mm	Ø 16	M6x70mm	M6x15mm
2 pcs	2 pcs	2 pcs	2 pcs

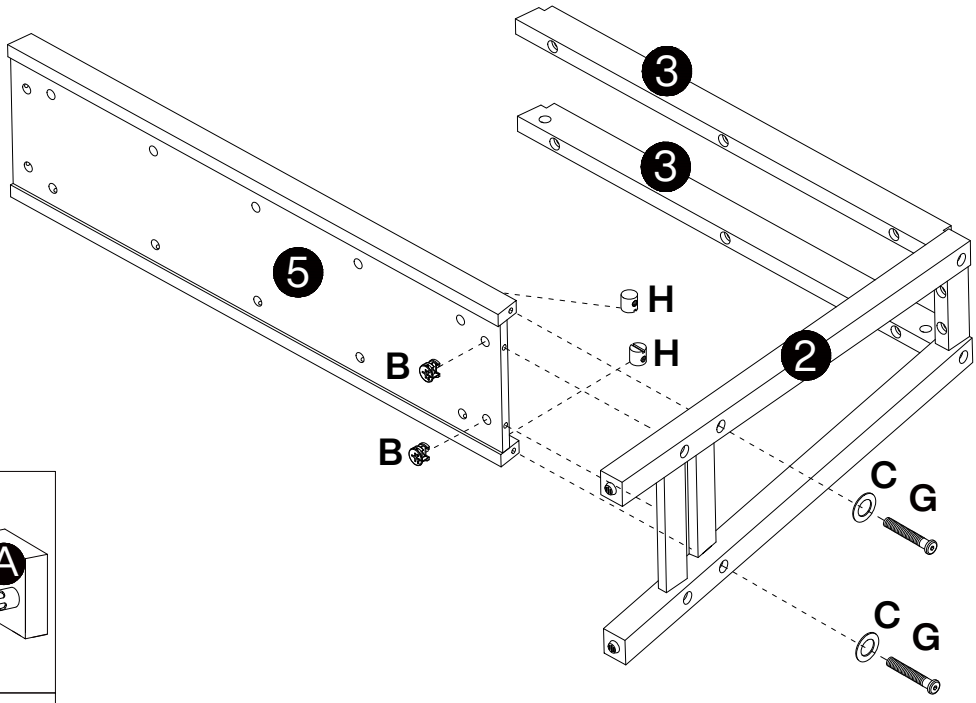

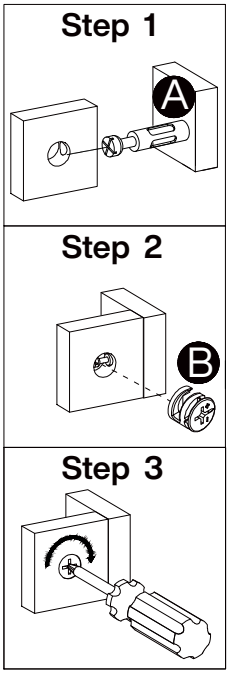

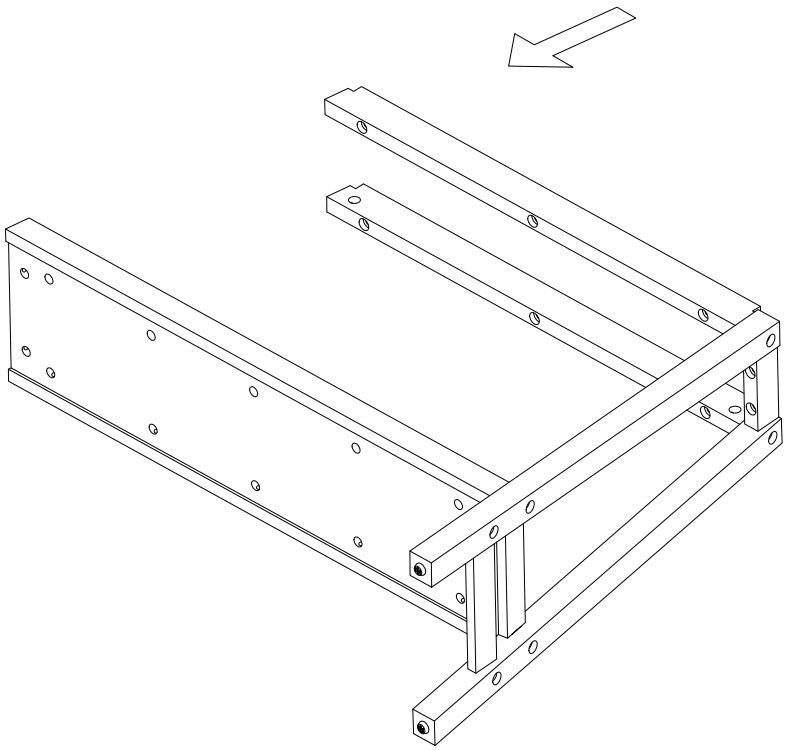

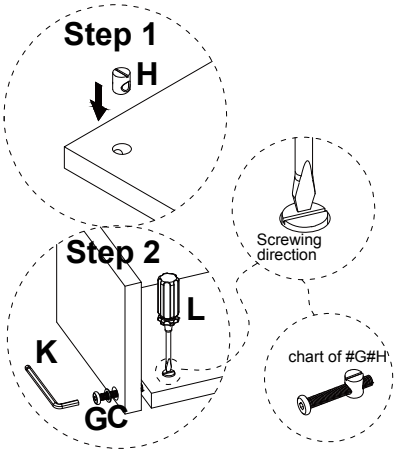

Step 1: Insert #H into the hole.
Step 2: Using a screwdriver, rotate #H until its groove aligns with #G. Lock in place by turning #G clockwise.

6

J
Ø8x30mm
4 pcs

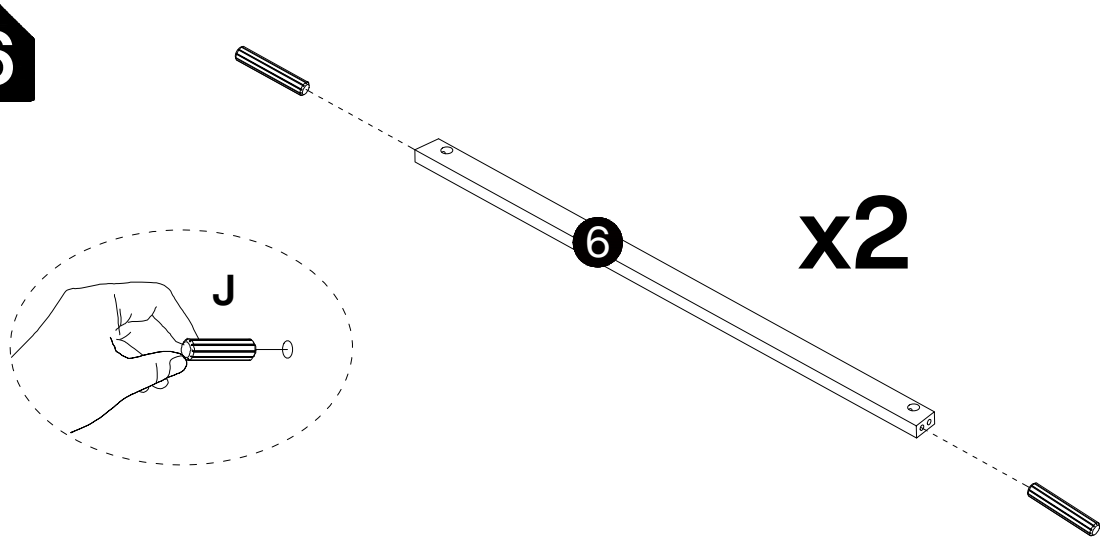

7

C	G	H
Ø 16	M6x70mm	M6x15mm
2 pcs	2 pcs	2 pcs

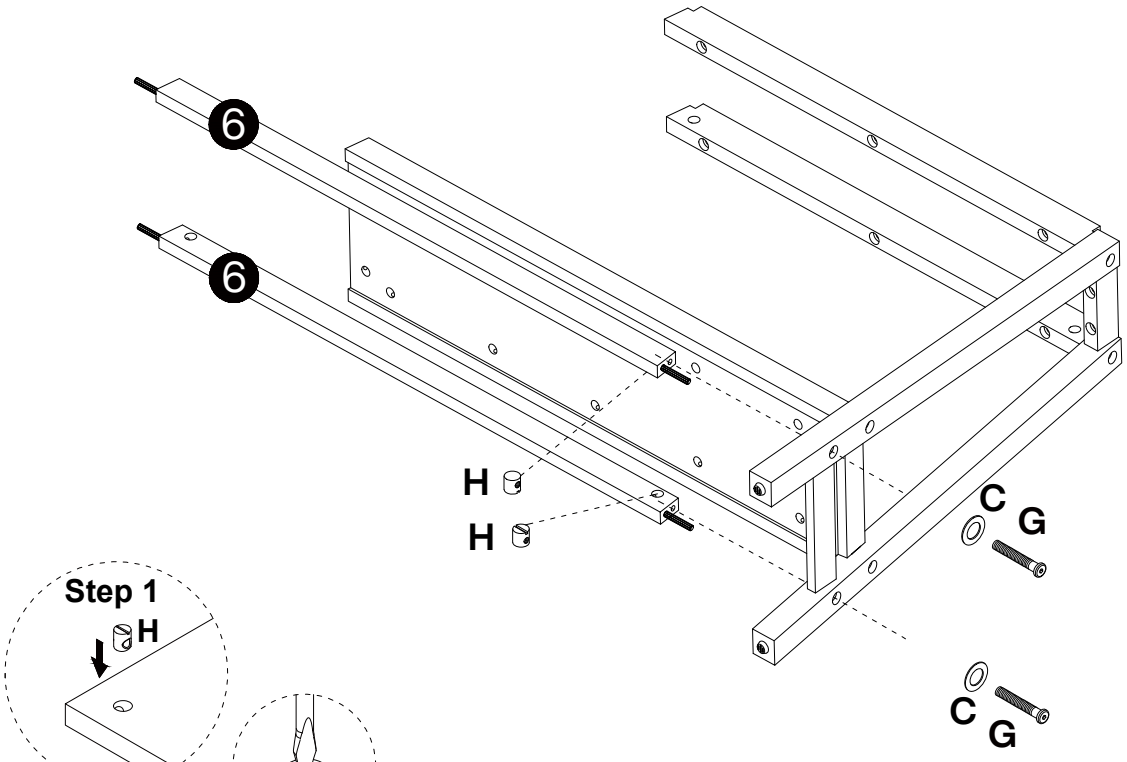

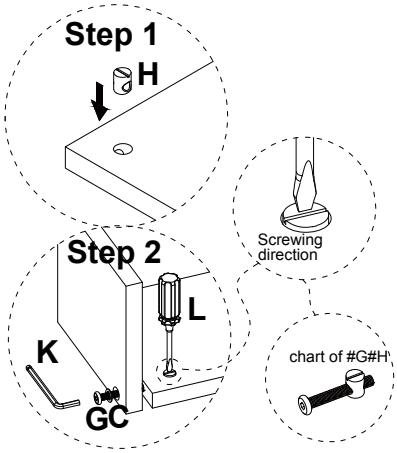

Step 1: Insert #H into the hole.
Step 2: Using a screwdriver, rotate #H until its groove aligns with #G. Lock in place by turning #G clockwise.

8

C	G	H
 Ø 16	 M6x70mm	 M6x15mm
6 pcs	6 pcs	6 pcs

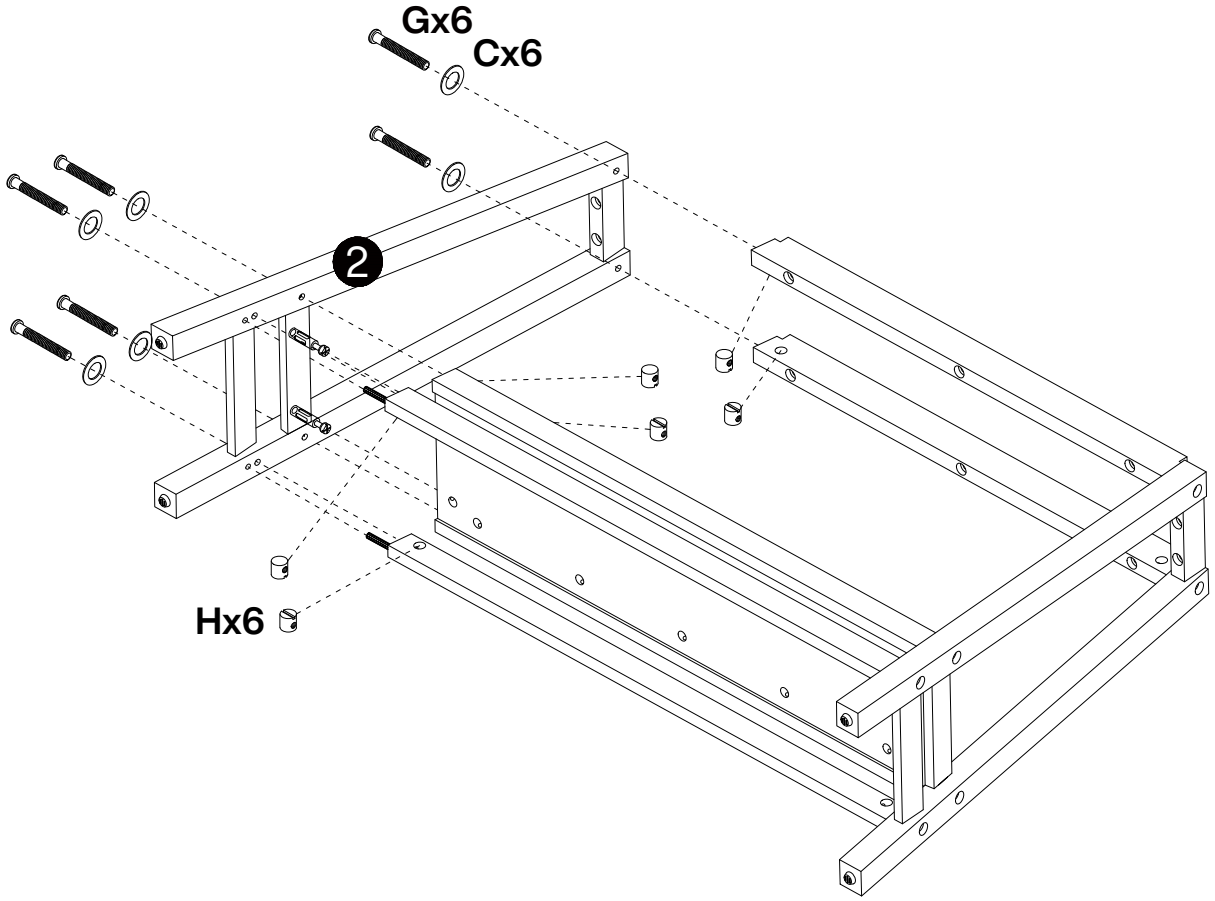

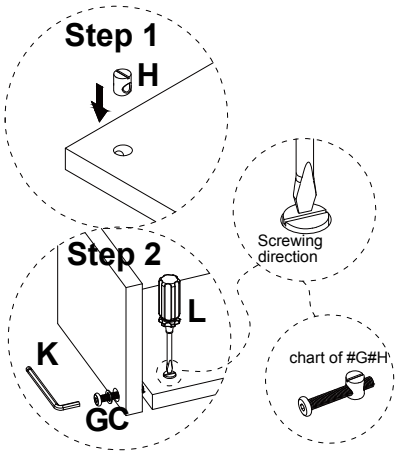

Step 1: Insert #H into the hole.
Step 2: Using a screwdriver, rotate #H until its groove aligns with #G. Lock in place by turning #G clockwise.

B

Ø15x12mm
2 pcs

9

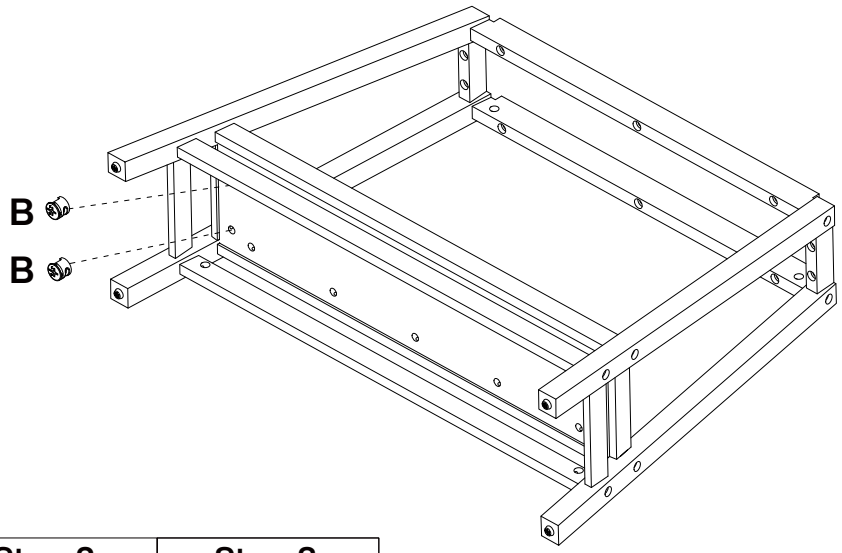

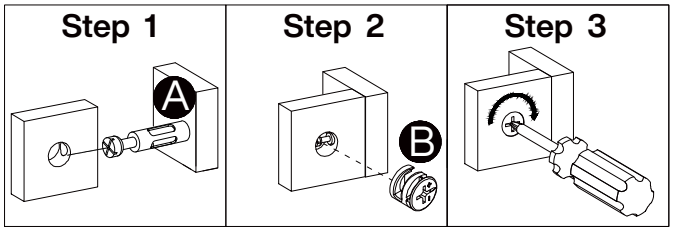

10

C	D	F
		
Ø 16	Ø 11	M6x55mm
6 pcs	6 pcs	6 pcs

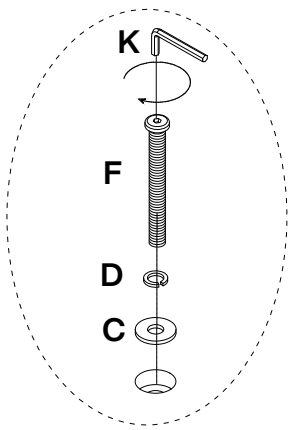

C	D	E
Ø 16	Ø 11	M6x45mm
4 pcs	4 pcs	4 pcs

11

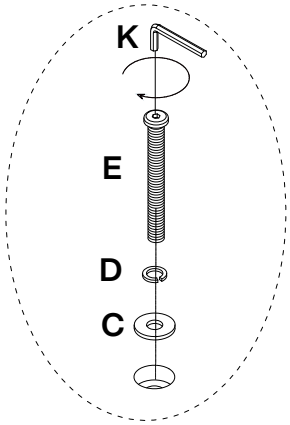

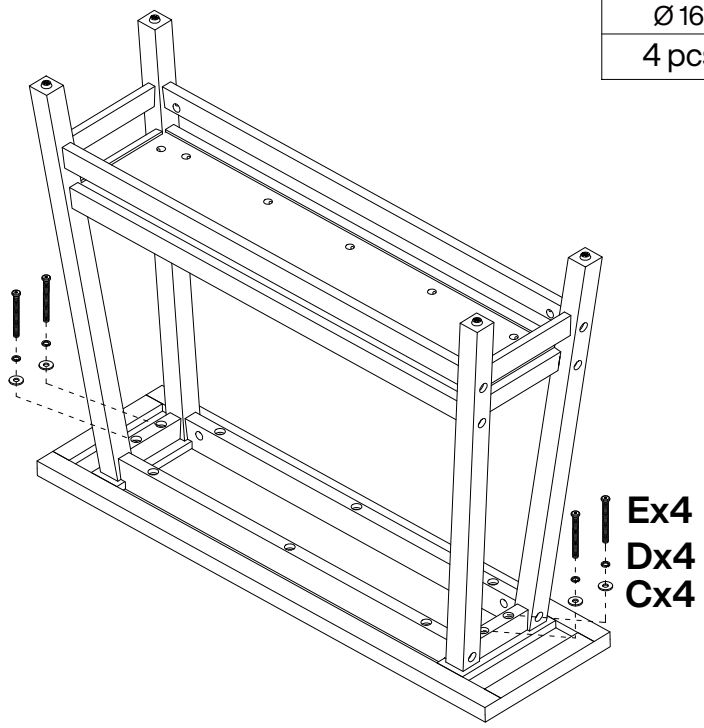

12

I
Ø20mm
36 pcs

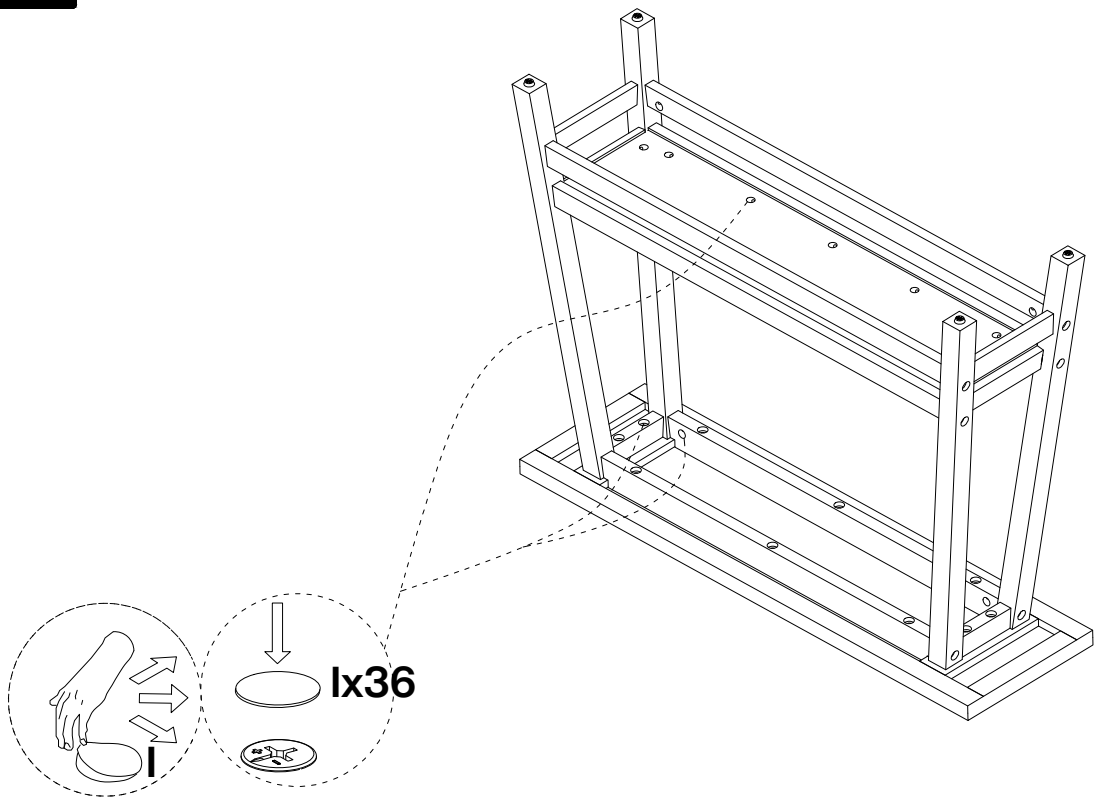

13

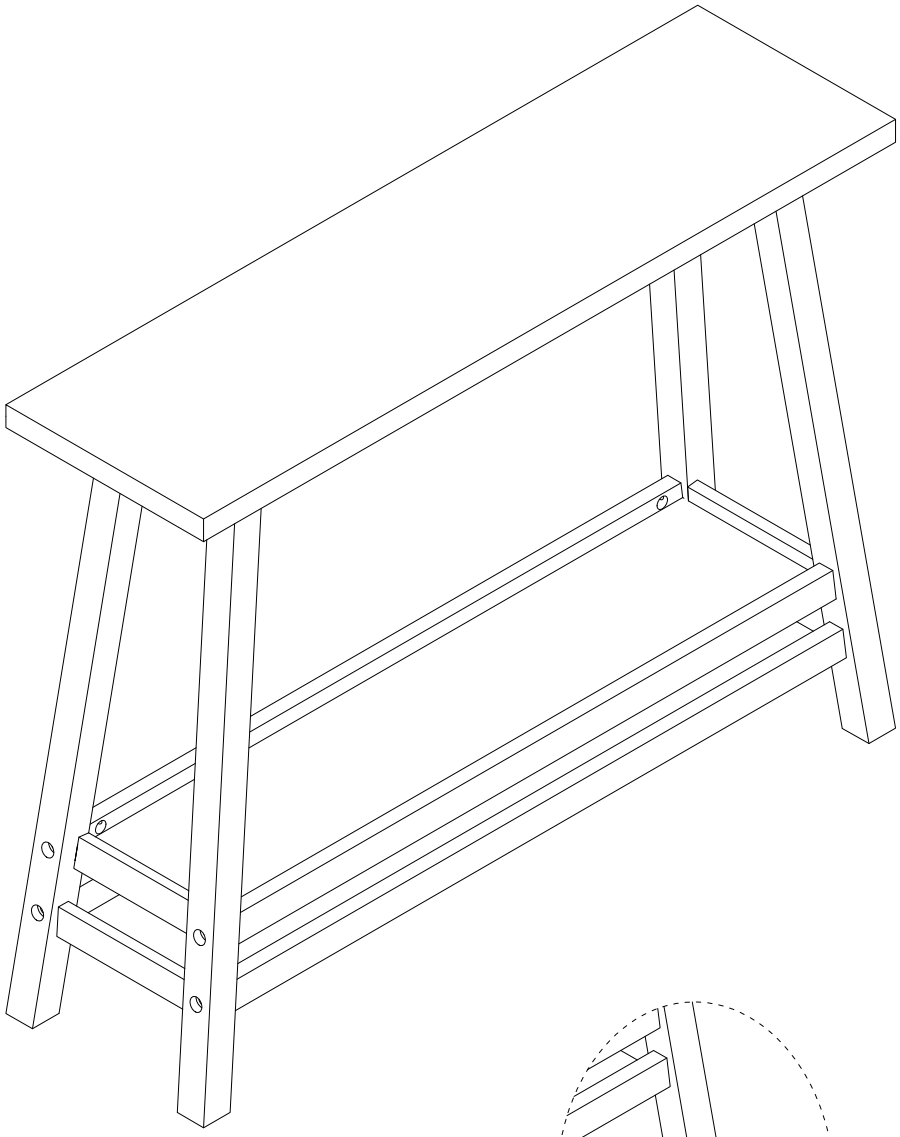

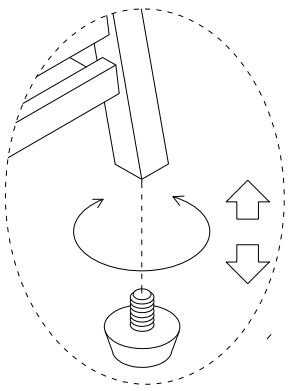

When it is not level on the ground, please adjust here.