ASSEMBLY INSTRUCTION

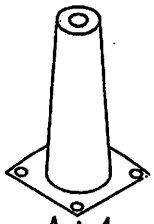
A*4

B*16

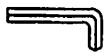
C*1

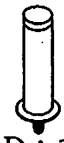
D*1

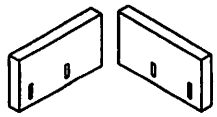
E*2

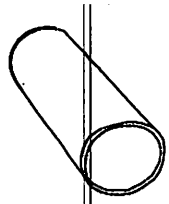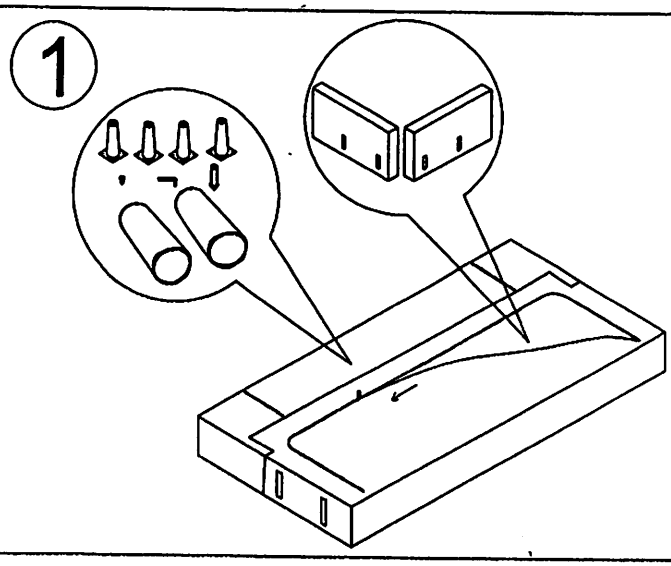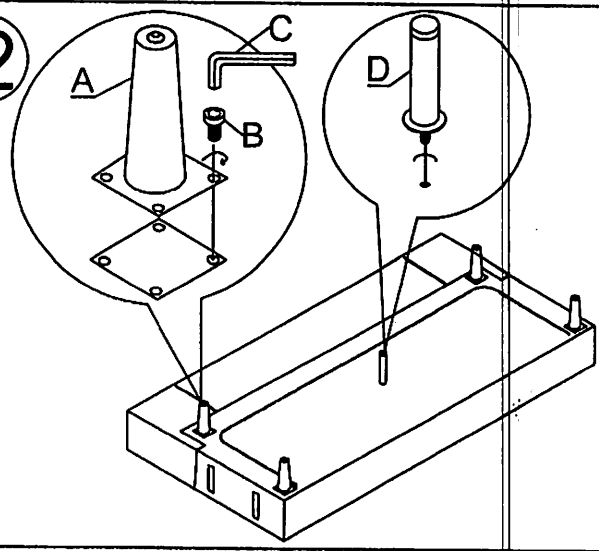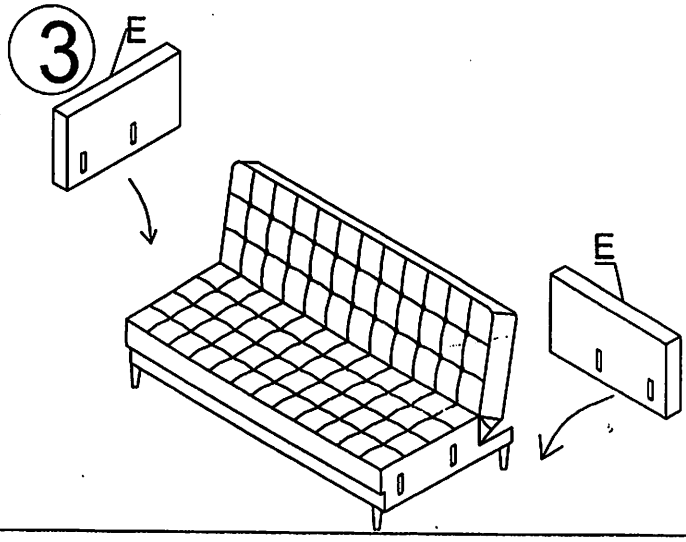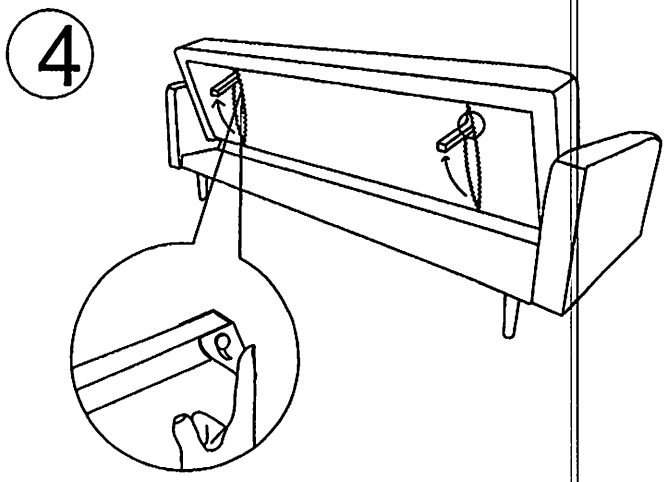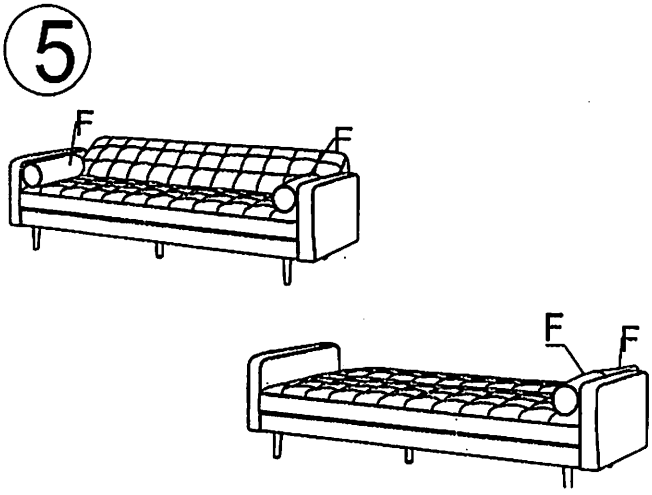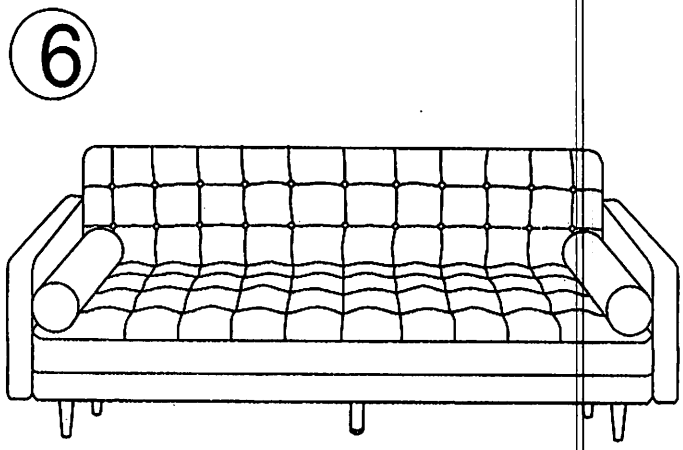
F*2