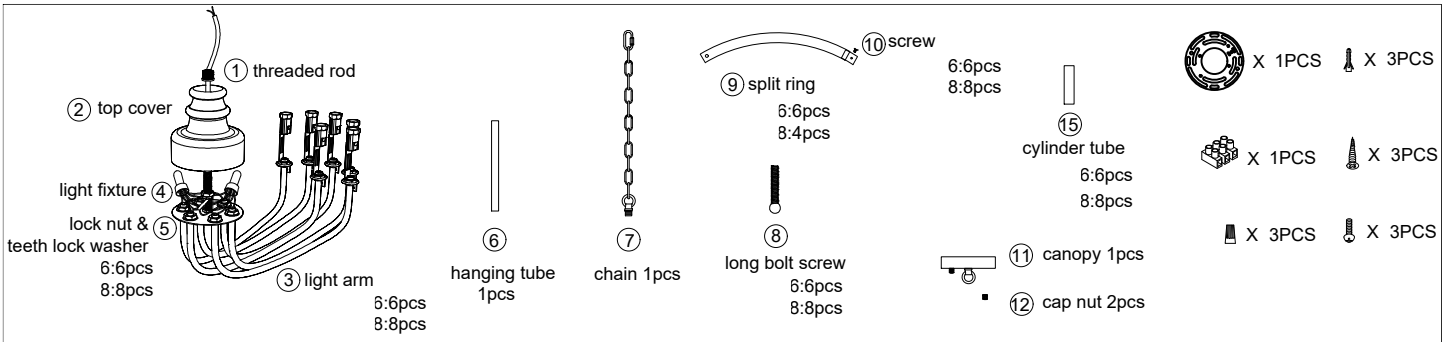

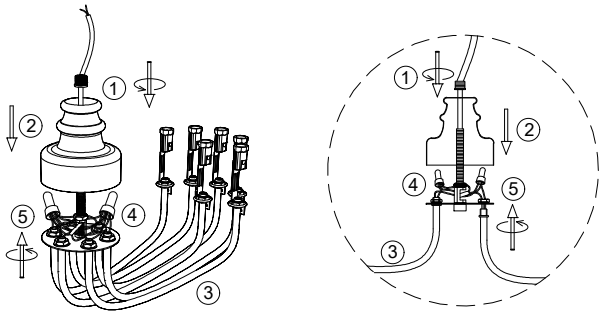

1.Install the light arm ③ to the plate ④ with lock nut and teeth lock washer ⑤ , close the top cover ② by rotate thread rod ① .
(Should be carefully when install the light arms to avoid distory the wires !!!)

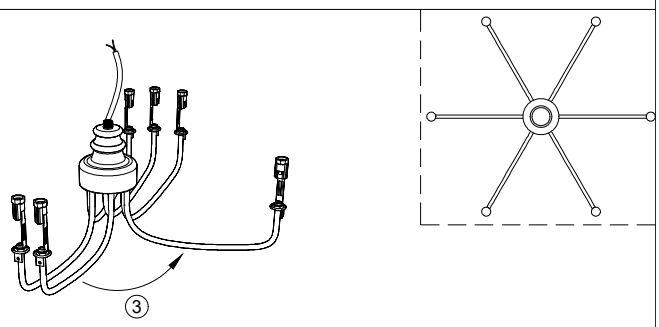

2.Adjust the arms to suitable position like picture shown.
(If the arm loosen, please back to step ① to lock tighten with the lock nuts ⑤ .)

Note: male A should connect with female A, male B should connect with female B (C with C, D with D).

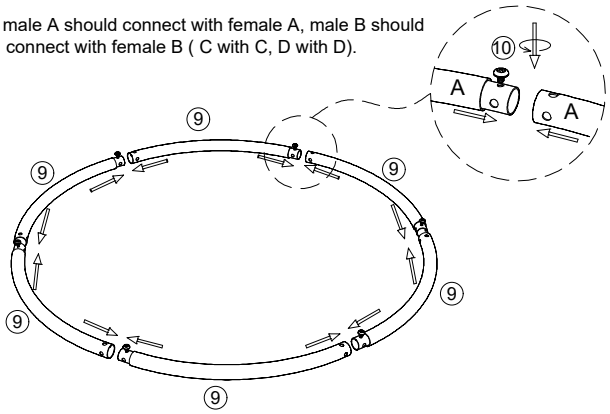

3.Assembled the split parts ⑨ to a completely ring fixture like picture showed.
(pushed the split parts together and fix with bolt screw ⑩)

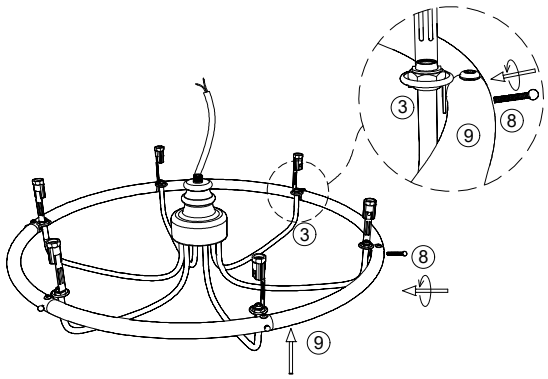

4.Install the ring ⑨ to the light arm with long bolt screw ⑧ , firstly locate the ring ⑨ to the arm ① with screw ⑧ , after that rotate screw ⑧ to make the whole ring ⑨ tighten.

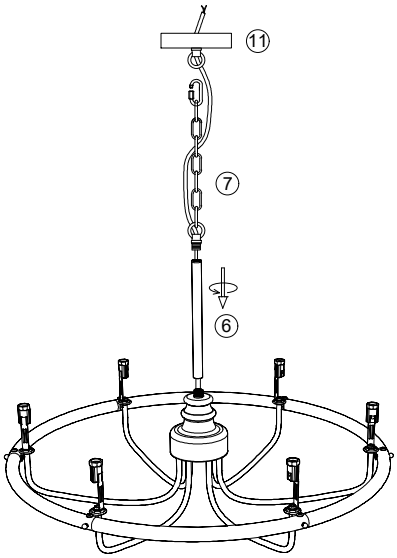

5.Let the wire go through the hanging tube ⑥ and chain ⑦ , rotate to fix both to the light fixture, hang the chain ⑦ to the canopy ⑪ , let the wire go through the canopy ⑪.

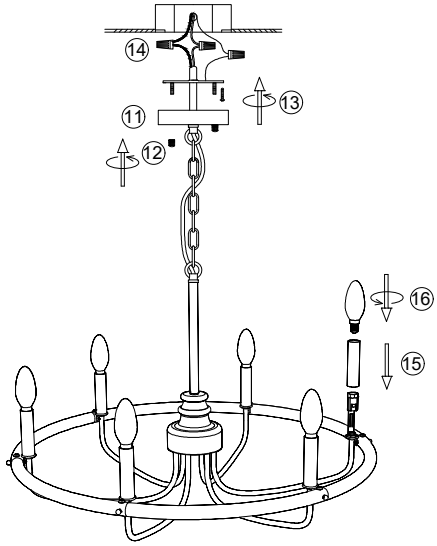

6.Install the bracket to the ceiling junction box with screw ⑬ .
7.Connect the wire to your home line with cap connector ⑭ .
8.Install the light fixture to the bracket with cap nut ⑫ .
9.Put the cylinder tube ⑮ on the bulb holder and install the bulb ⑯ .

Please read carefully before installation!!!
Note : Please make sure that the electricity is powered off during installation !
Only a professional electrician should install this kind of product !