ITEM NO.:2013

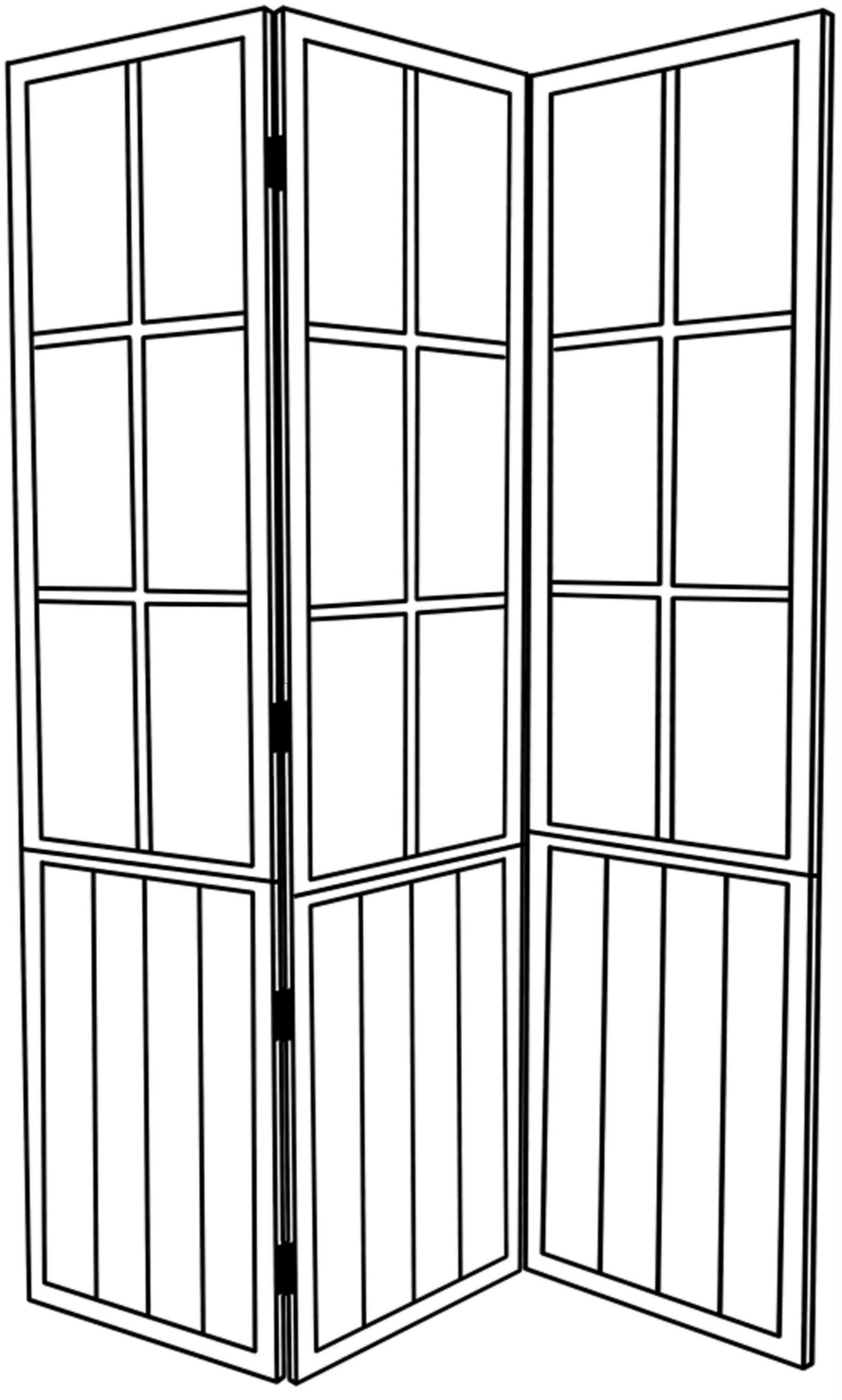

Components

A x1

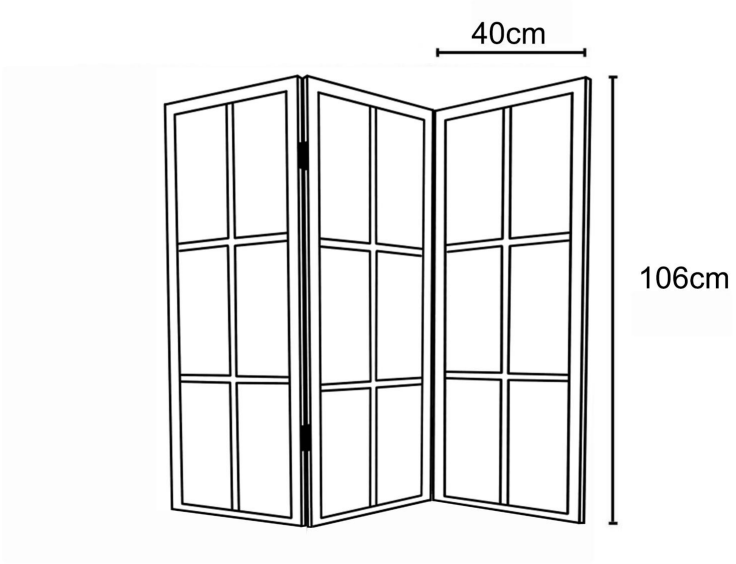

B x1

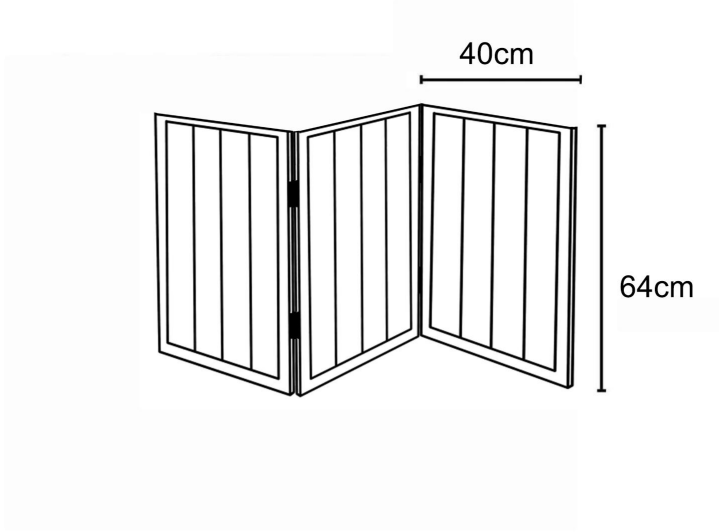

C x6



5cm

Step:1

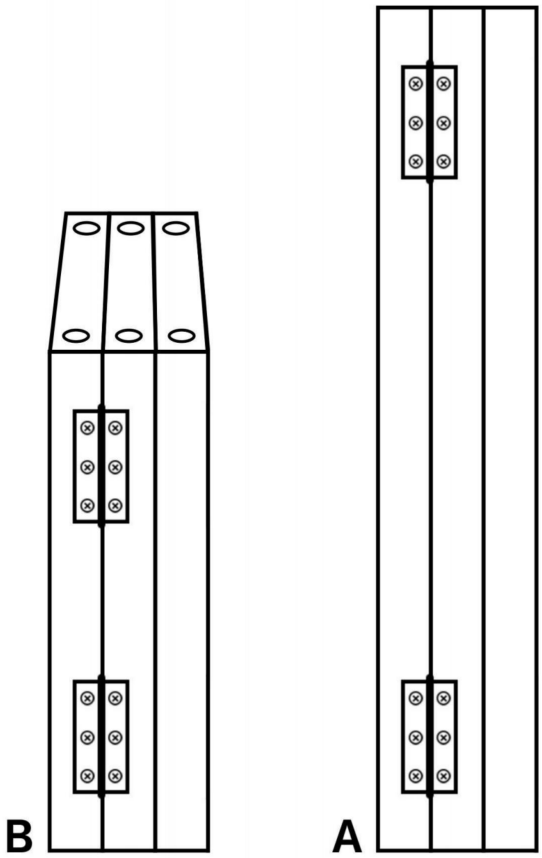

Step:2

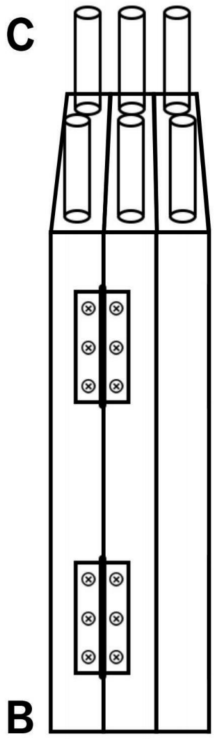

Step:3

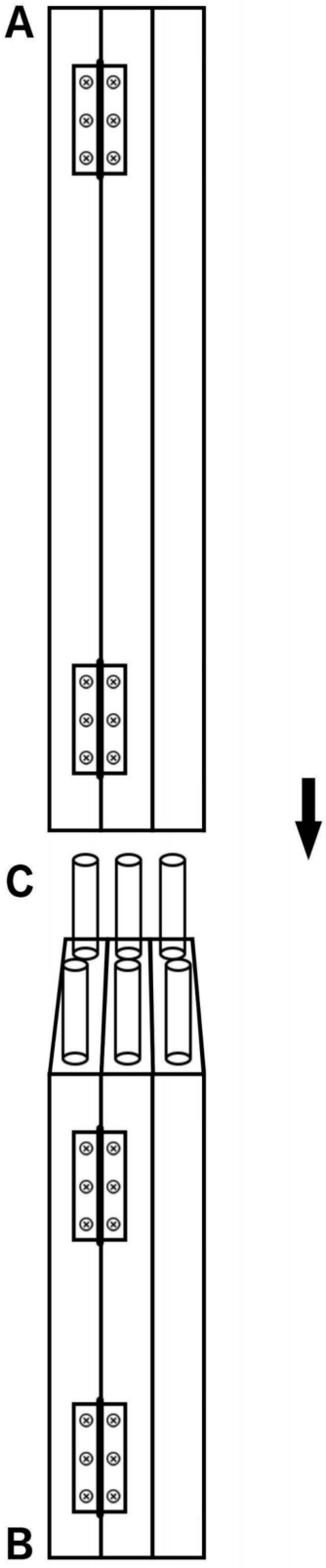

Step:4

