ASSEMBLY INSTRUCTIONS

QUEEN BED WITH STORAGE DRAWERS, 2 sets of USB+LED LIGHT

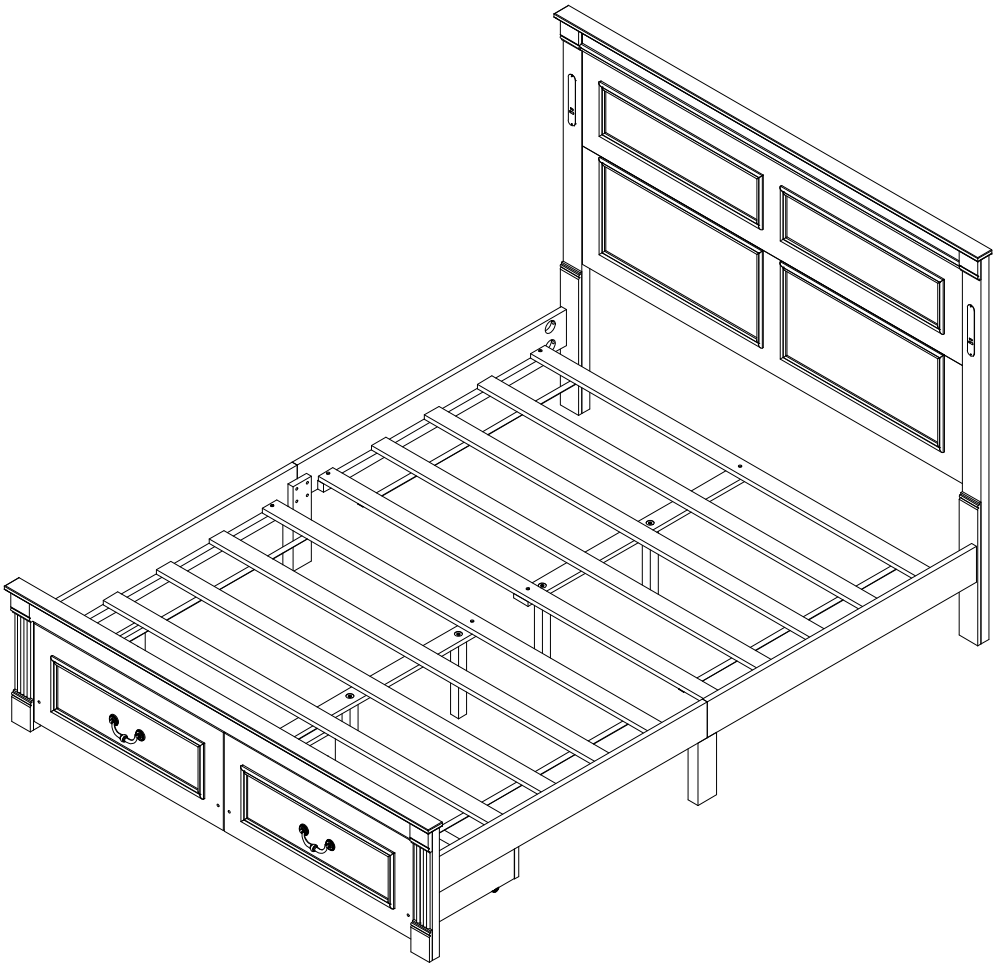

SD33022

Detail View

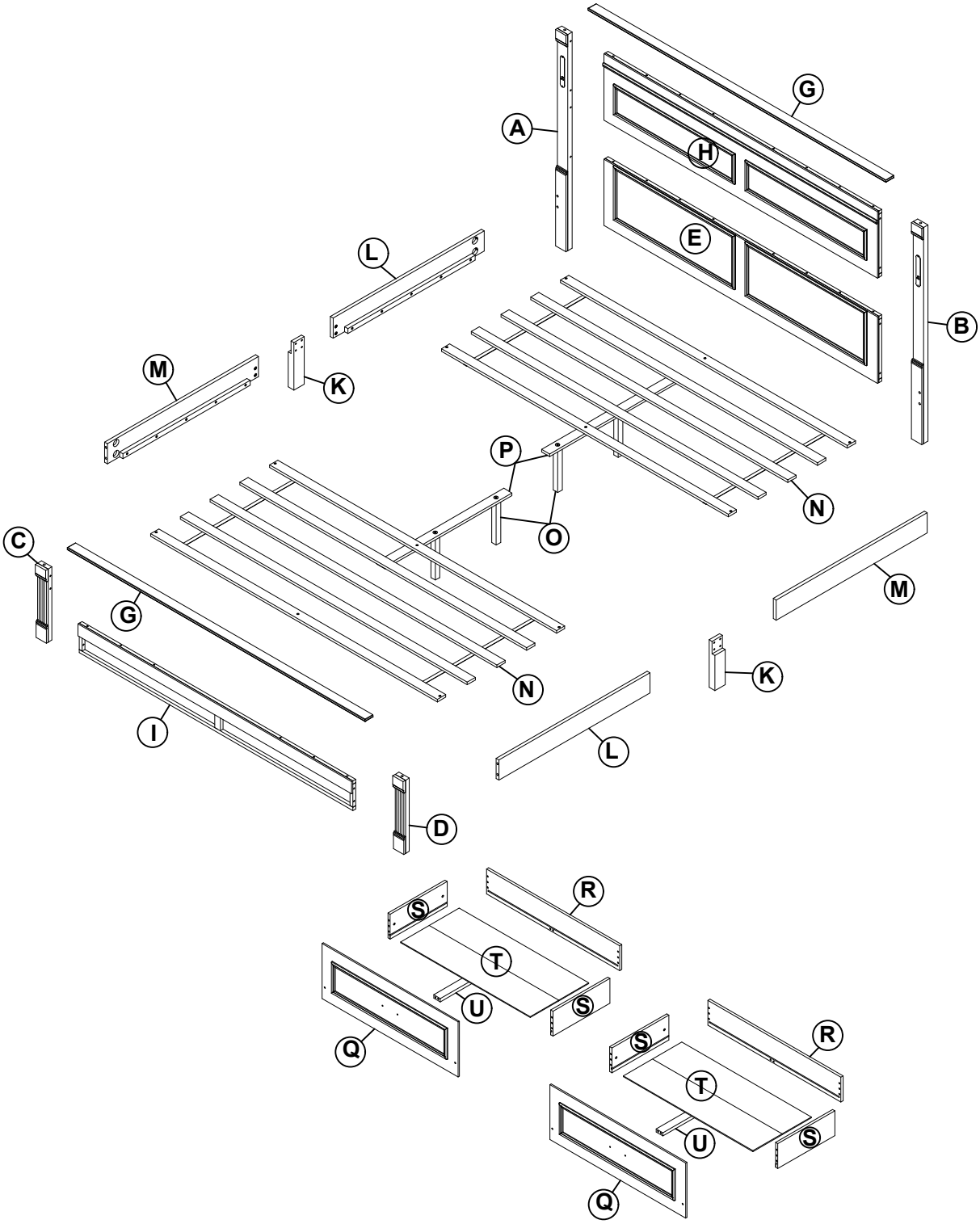

Part List

A 1PC	B 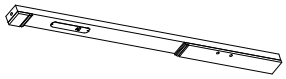 1PC	C 1PC
D 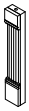 1PC	E 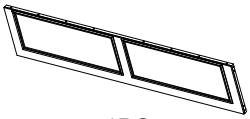 1PC	G 2PCS
H 1PC	I 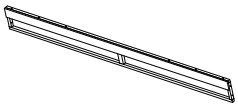 1PC	K 2PCS
L 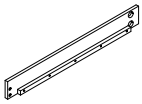 2PCS	M 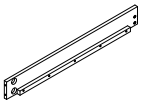 2PCS	N 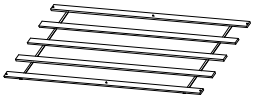 2PCS
O 4PCS	Q 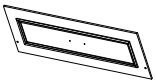 2PCS	R 2PCS
P 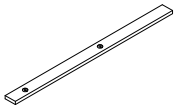 2PCS	T 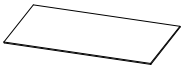 4PCS	U 2PCS
S 4PCS		

Hardware List

1 (Ø13) x1/4"x35mm Hex-Head boits (32pcs)	2 1/4"x13x1.5mm Hex-Head boits (32pcs)	3 1/4"x19x1.5mm Hex-Head boits (32pcs)
4 Ø5x16"x90mm BOLT (8pcs)	5 Ø5x16" CRESCENT WASHER (8pcs)	6 Ø5x16" NUT (8pcs)
7 WRENCH (1pc)	8 4x30mm Wood screws (28pcs)	9 Ø10x20mm Wooden dowel (8pcs)
10 (Ø13) x1/4"x60mm Hex-Head boits (8pcs)	11 1/4"x15mm(9.5mm) Horizontal-Hole Nuts(8pcs)	12 Ø8x30mm Wooden dowel (34pcs)
13 142x59x27CC112MM mushroom hand in (2pcs)	14 Ø5/32"x15mm Pan head (4pcs)	15 100x19x19mm Wooden dowel (8pcs)
	16 (1/4") 4.5x58mm Allen key (1pc)	

ASSEMBLY TOOLS REQUIRED (NOT INCLUDED)

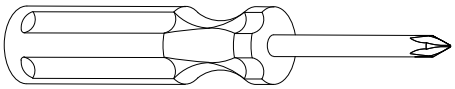

PLEASE BE CAREFUL DO NOT DAMAGE THE HOLE POSITION WHEN YOU USE POWER TOOLS !

STEP 1

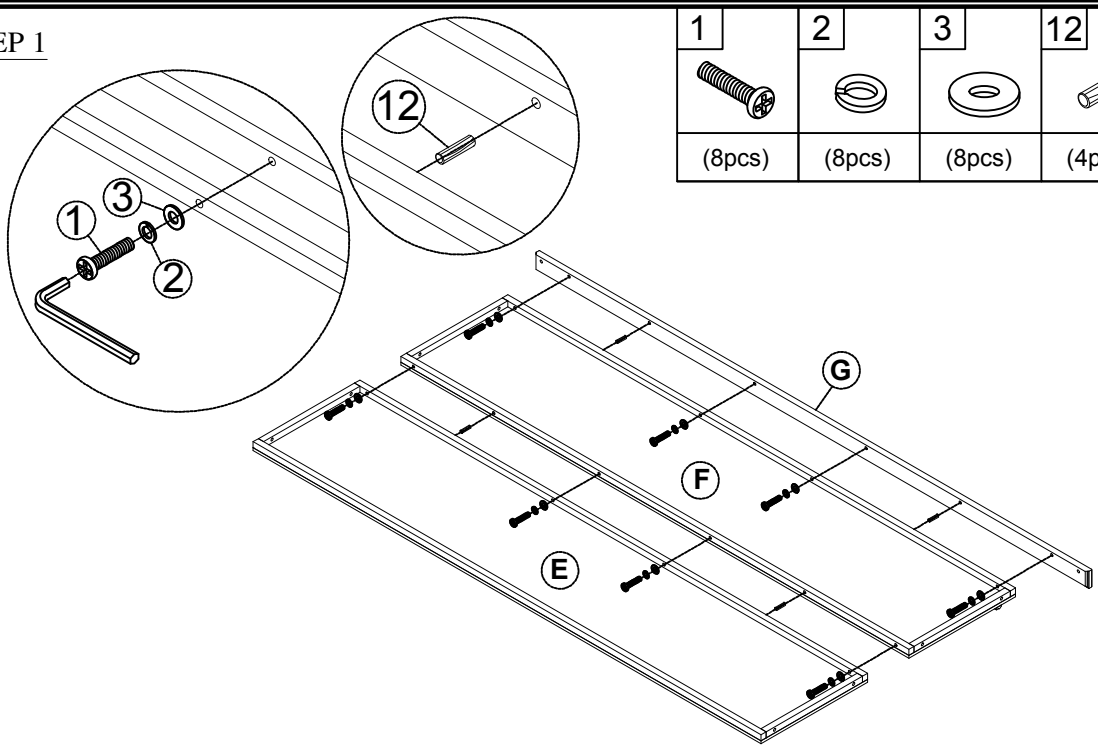
1
2
3
12
(8pcs)
(8pcs)
(8pcs)
(4pcs)
G
F
E

STEP 2

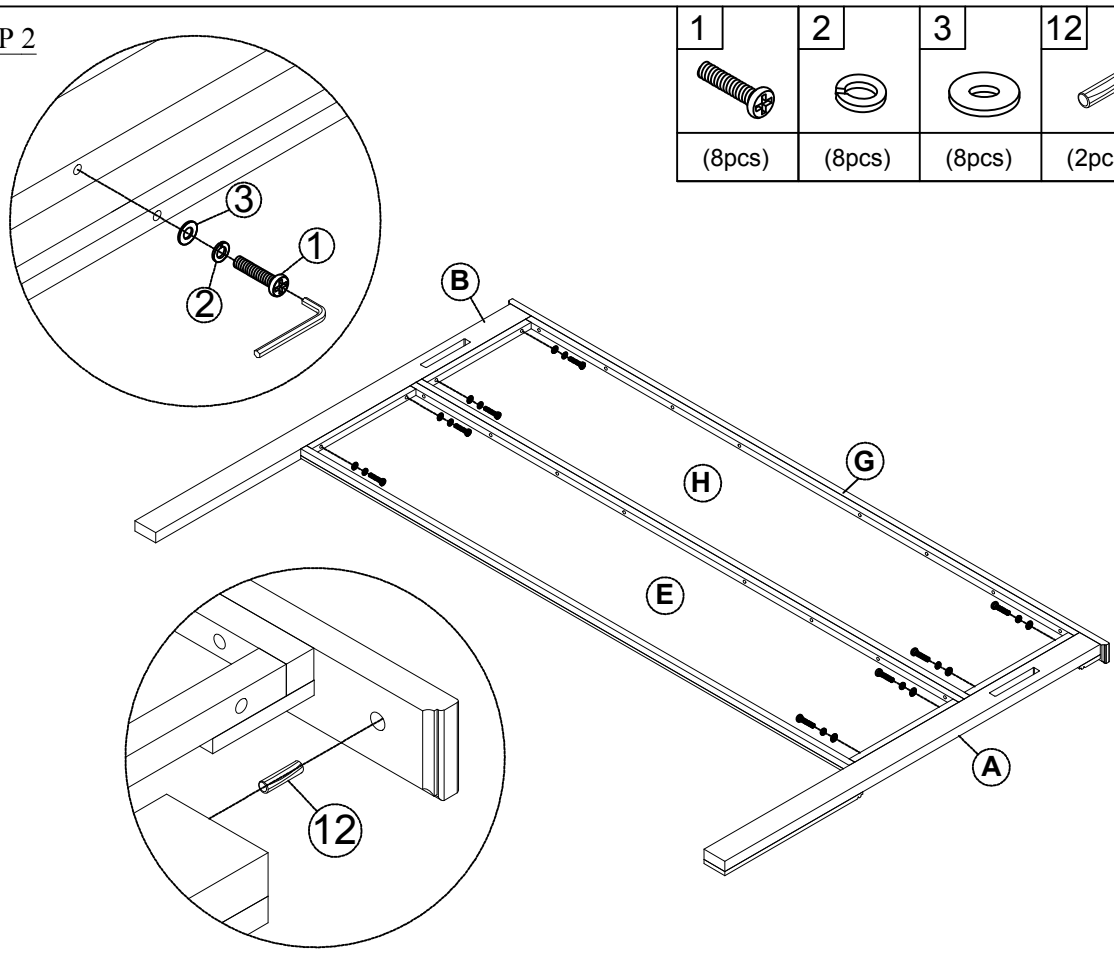
1
2
3
12
(8pcs)
(8pcs)
(8pcs)
(2pcs)
B
H
G
E
A

STEP 3

1	2	3	12
(4pcs)	(4pcs)	(4pcs)	(2pcs)

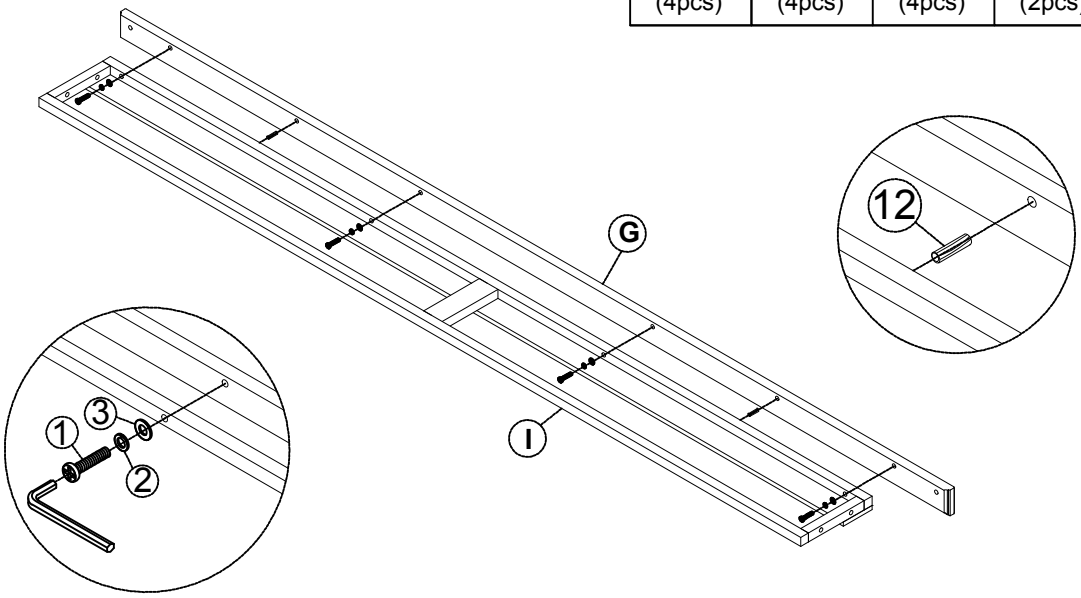

STEP 4

1	2	3	12
(4pcs)	(4pcs)	(4pcs)	(2pcs)

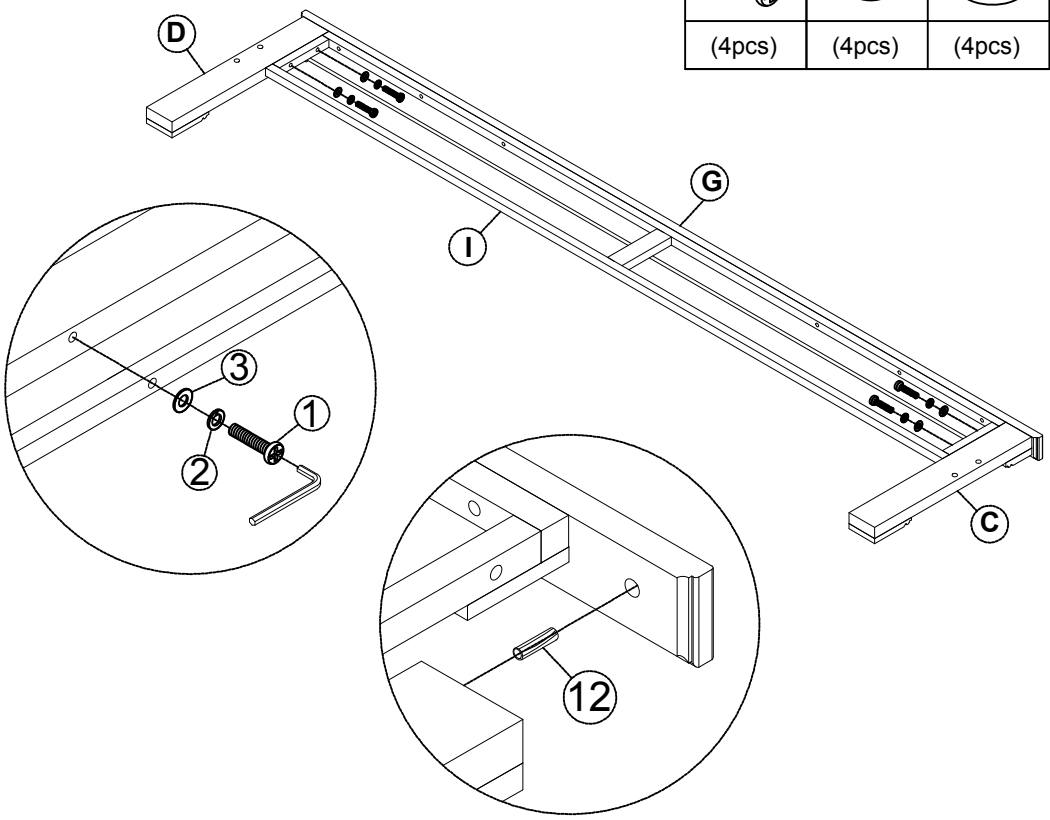

STEP 5

1	2	3
(8pcs)	(8pcs)	(8pcs)

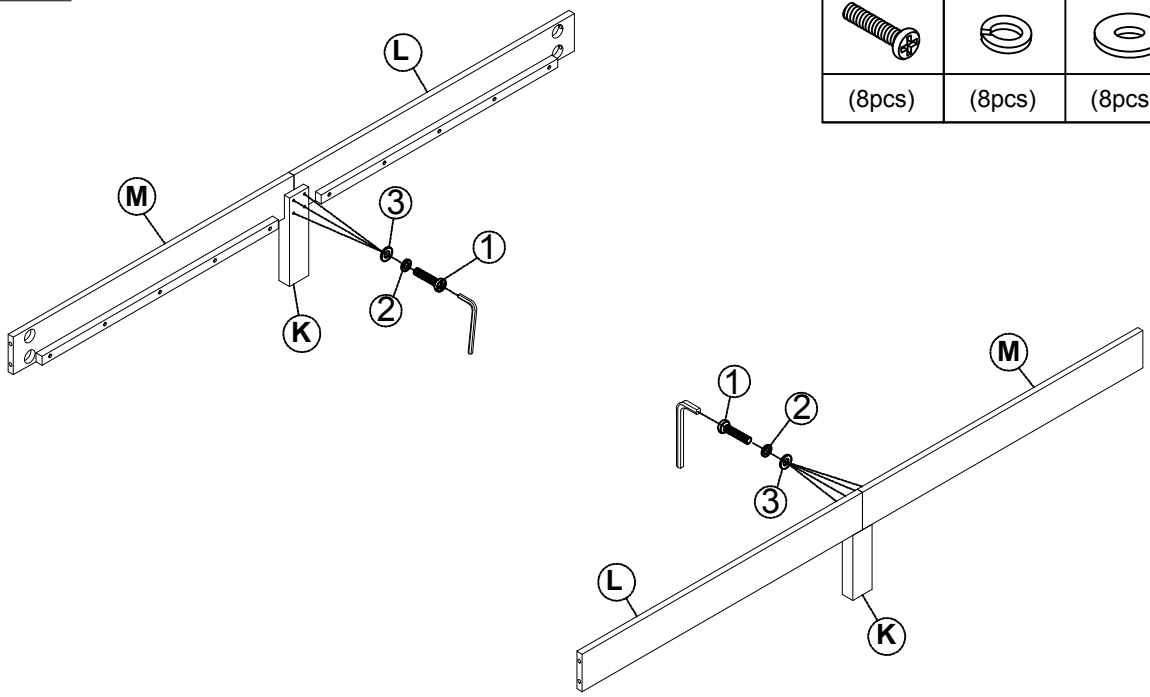

STEP 6

4	5	6	7
(8pcs)	(8pcs)	(8pcs)	(1pc)

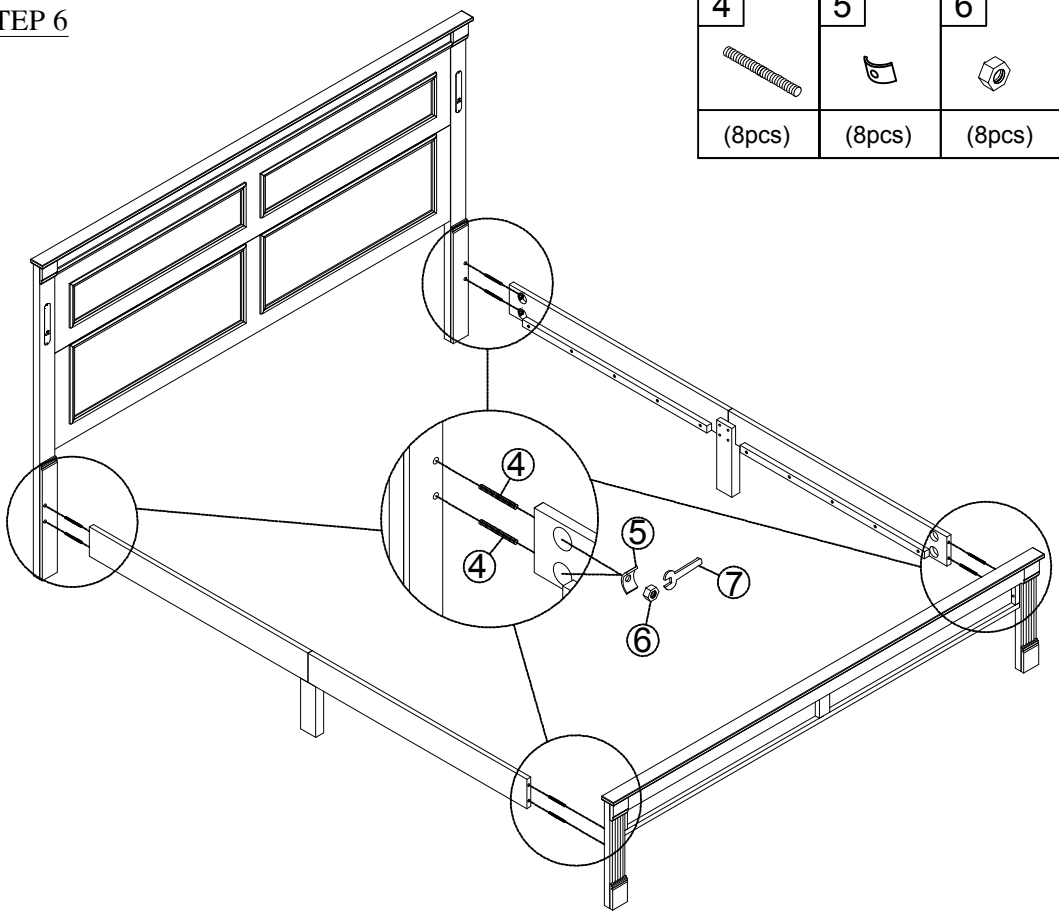

STEP 7

8	9	15
(16pcs)	(8pcs)	(8pcs)

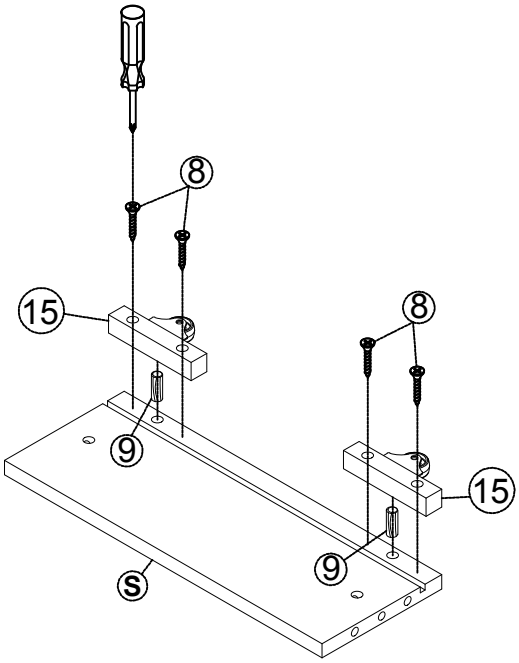

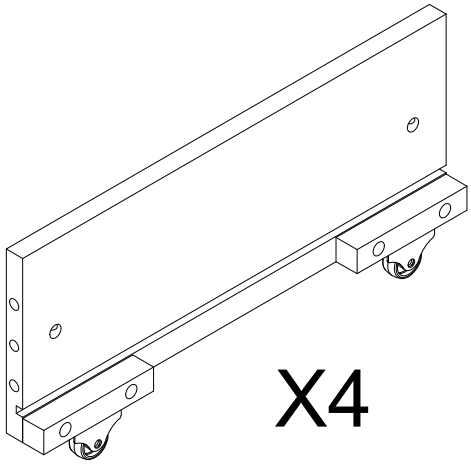

STEP 8

10	11	12	13	14
(8pcs)	(8pcs)	(24pcs)	(2pcs)	(4pcs)

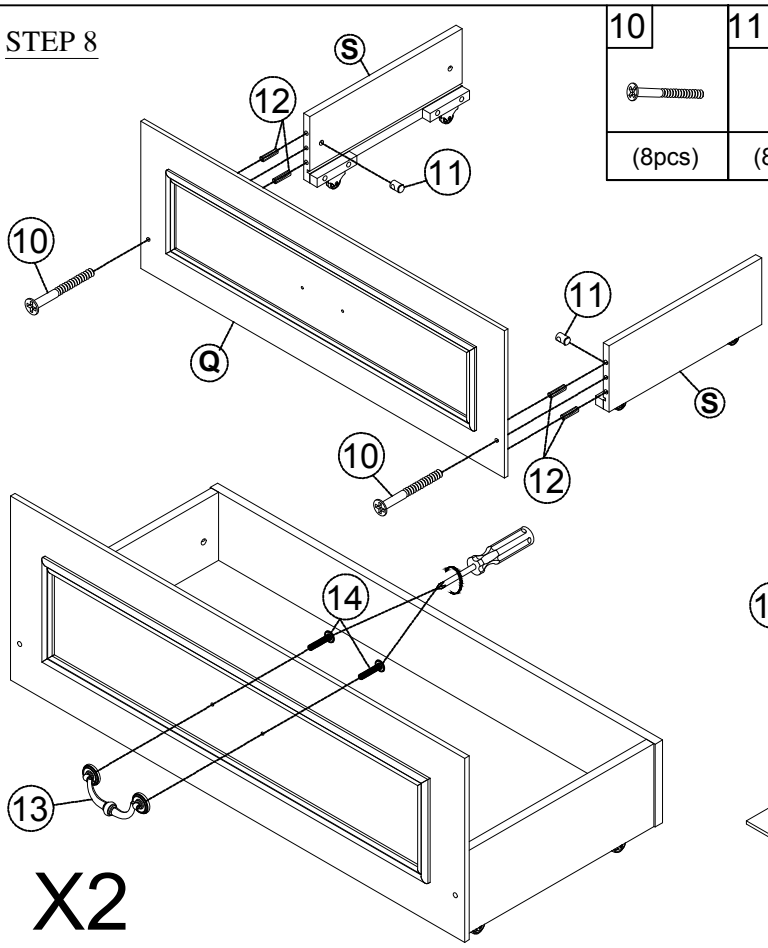

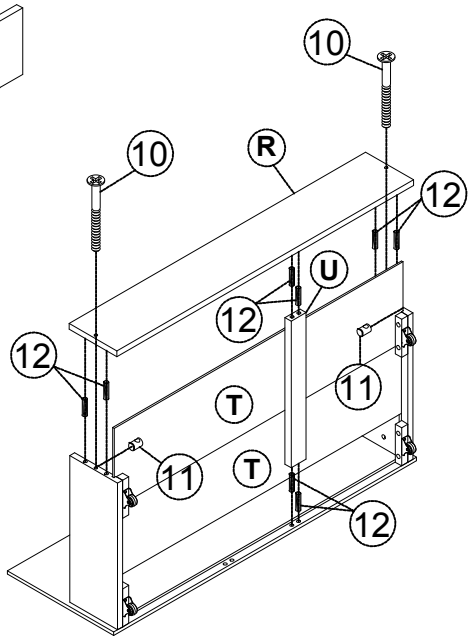

STEP 9

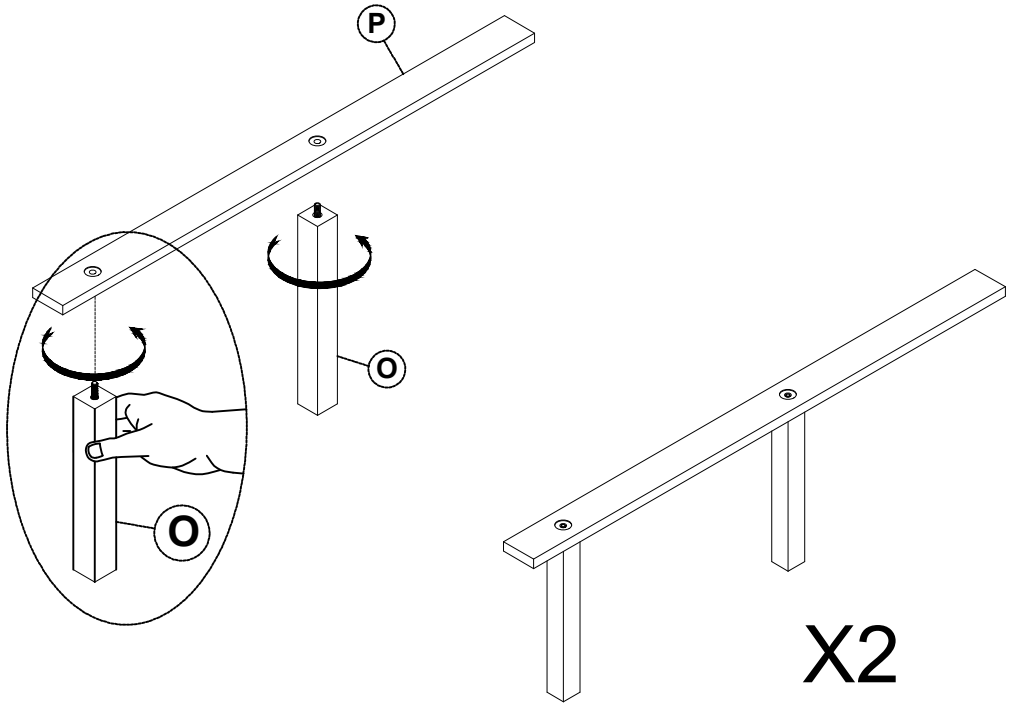

STEP 10

8

(12pcs)

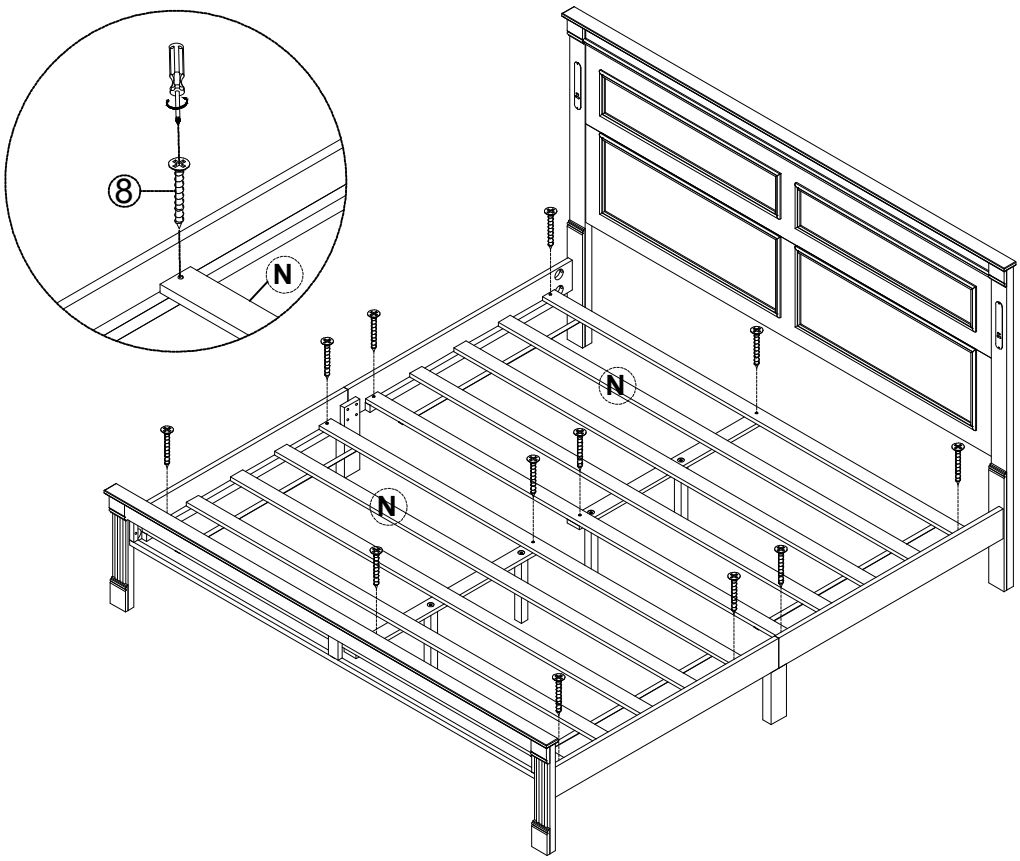

STEP 11

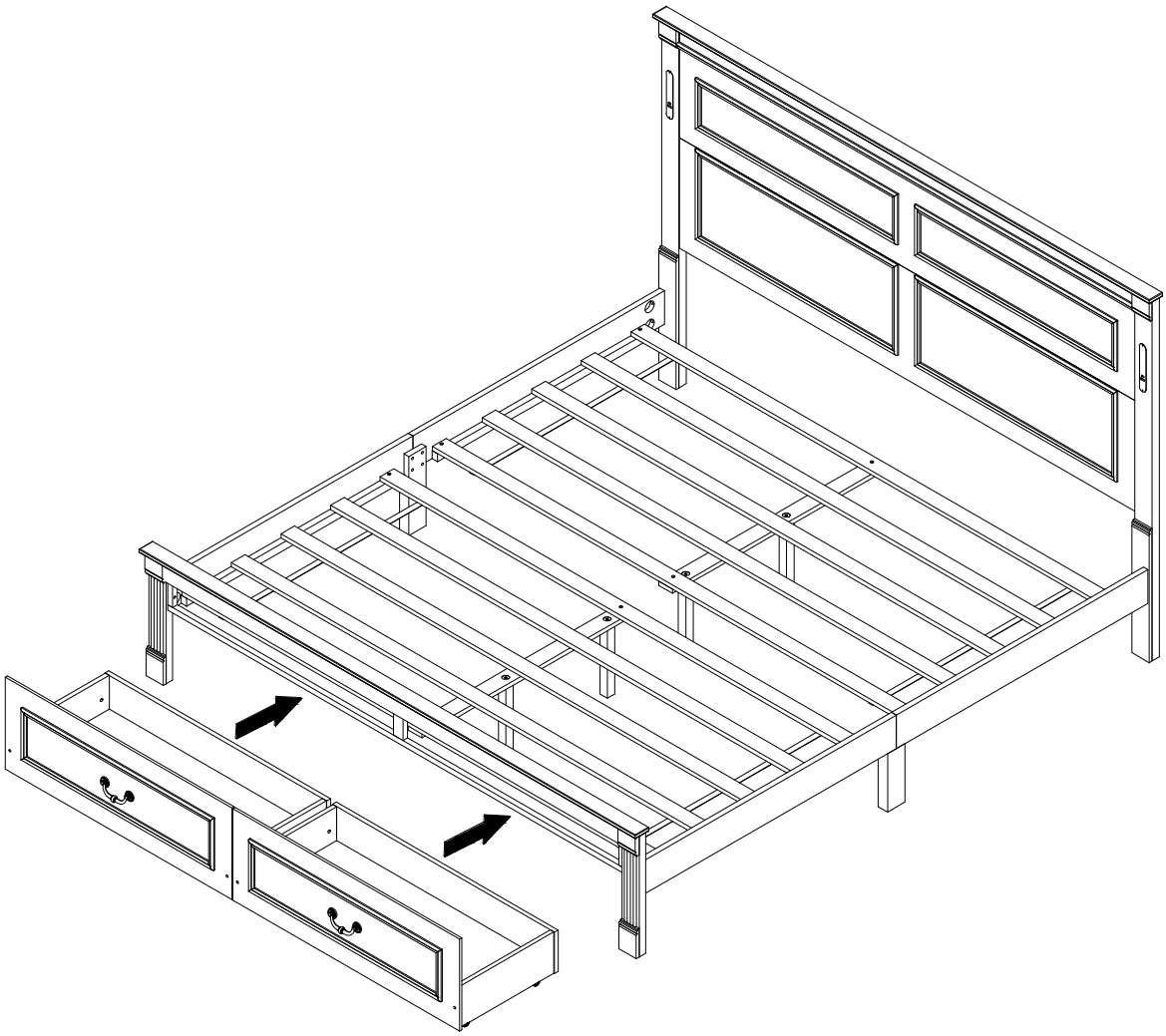

Finish

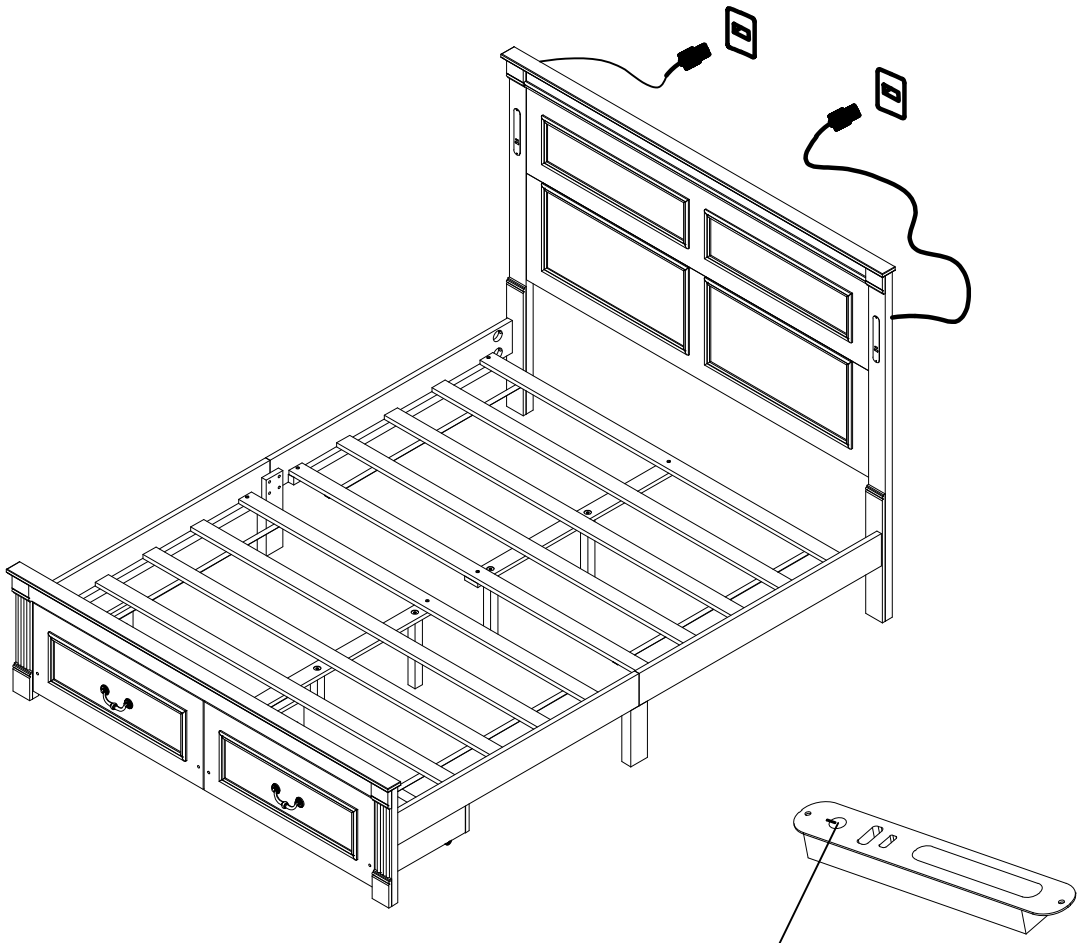

How to use

Short press the button to control the switch.
Long press the button to adjust the brightness.

Product Usage Precautions:

1 : The product cannot be used outdoors;

2 : Please reserve sufficient hole clearance during the installation;

3 : Please select an appropriate power supply to ensure normal operation.

4 : Do not look directly at the on-lighted LED strip for a long time to avoid any damage of your sight.

5 : Please have professionals carry out disassembly and maintenance to avoid causing various damages