ASSEMBLY INSTRUCTIONS

COASTER FINE FURNITURE

Fine Furniture for every stage of life

609690LRP
LAF POWER RECLINER

ITEM :609690LRP

ASSEMBLY INSTRUCTIONS

ASSEMBLY TIPS:

1.Remove hardware from box and sort by size.
2.Please check to see that all hardware and parts are present prior to start of assembly.
3.Please follow attached instruction in the same sequence as numbered to assure fast & easy assembly.

WARNING!
1.Don't attempt to repair or modify parts that are broken or defective. Please contact the store immediately.
2.This product is for home use only and not intended for commercial establishment.

ASSEMBLY TIME	2 MINUTES

PARTS IDENTIFICATION

A BACK **1 PC**

B BASE 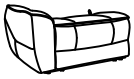 **1 PC**

C PLUG-IN POWER SUPPLY **1 PC**

D Y CABLE **1 PC**

ITEM :609690LRP

ASSEMBLY INSTRUCTIONS

STEP 1

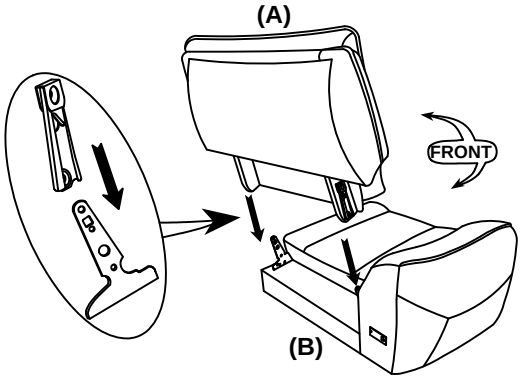

STEP 2

COMPLETE

STEP 3

OPTION1:

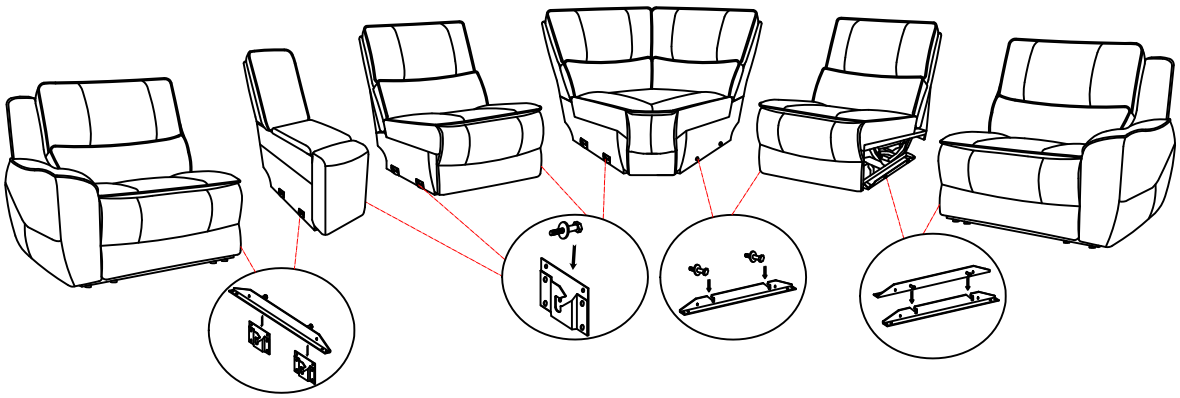

OPTION2:

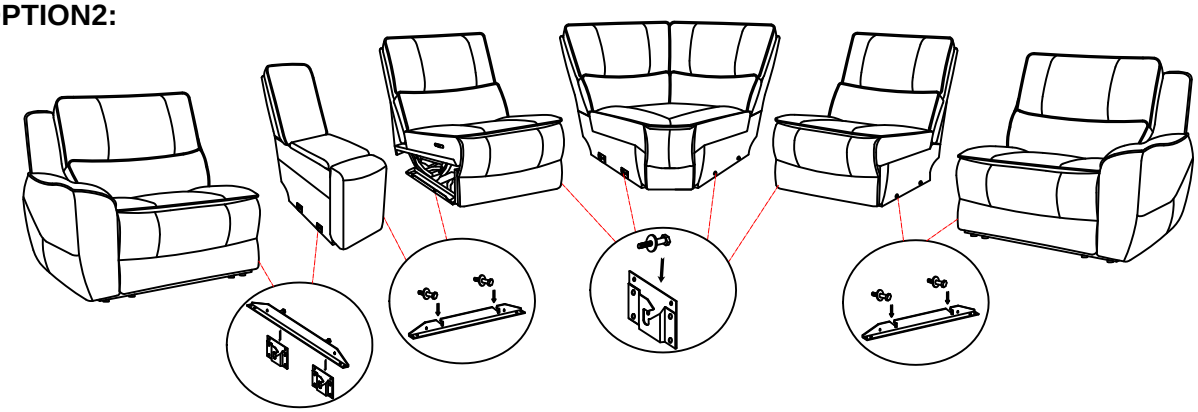

STEP 4

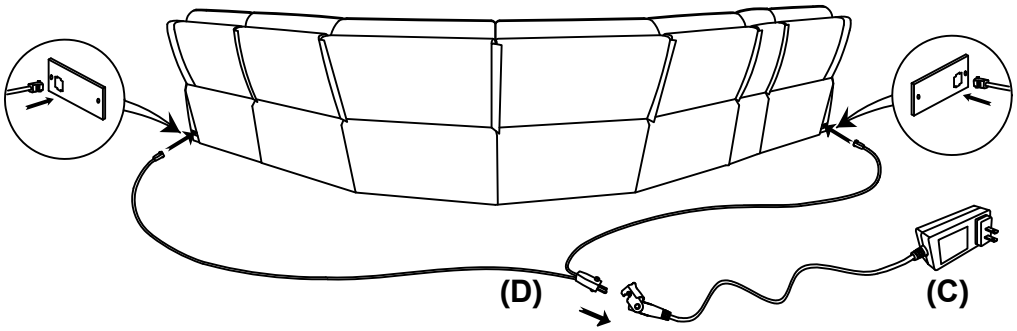

STEP 5

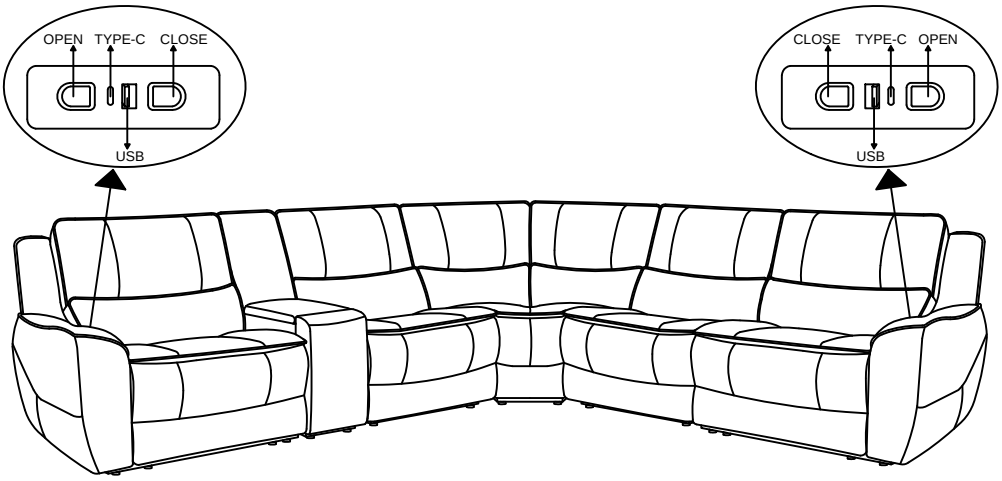

ITEM :609690LRP

Please follow below steps to install the 9V batteries when there is no power to operate the motion sofa.(Any model of 9V battery is applicable)

STEP 1

Open the marked battery door on the backup battery box.

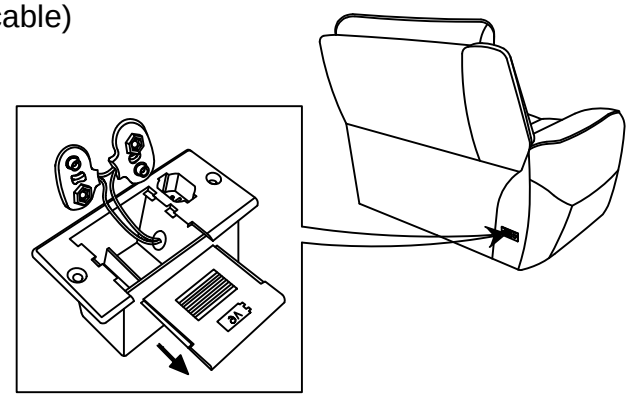

STEP 2

Install two 9V batteries in the backup battery box.(batteries are not included)

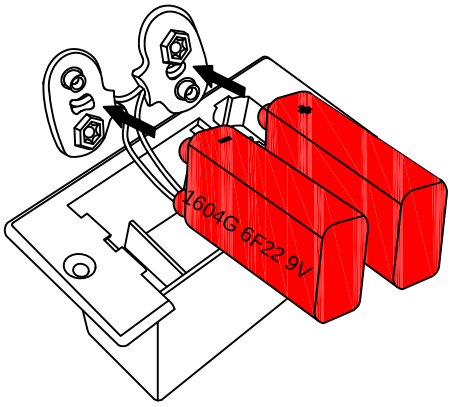

STEP 3

Push the batteries in.

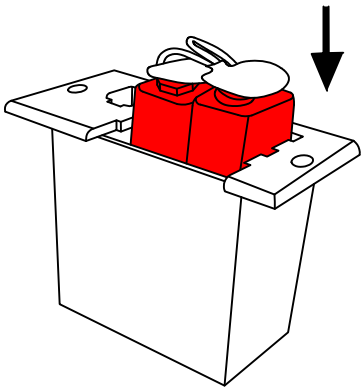

STEP 4

Close the box door.

Notice: Please don't keep the battery in the box when the power motion sofa is under daily use within power supply.

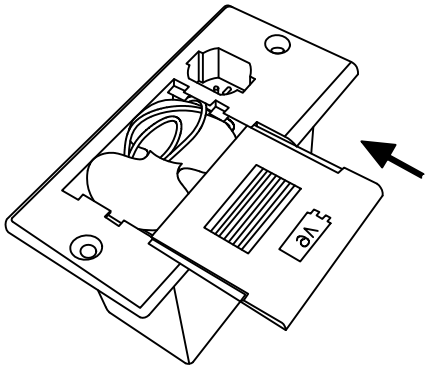

ITEM :609690LRP

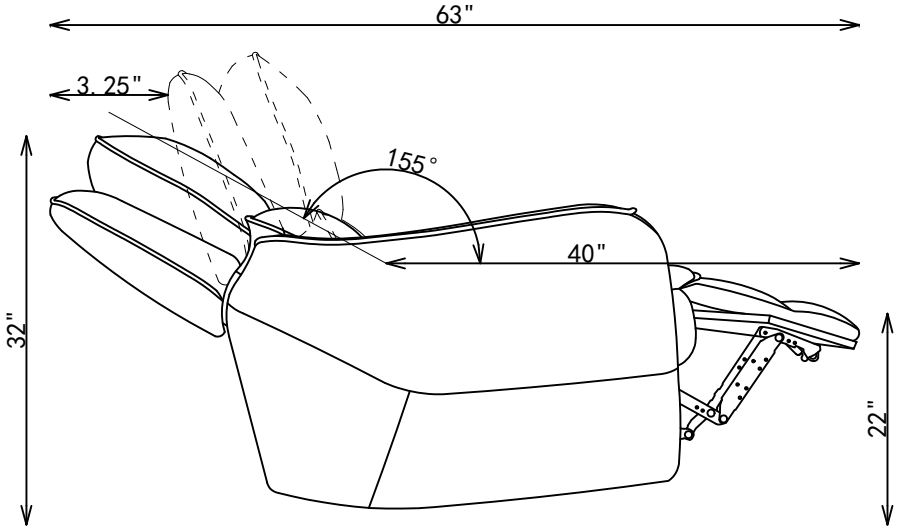

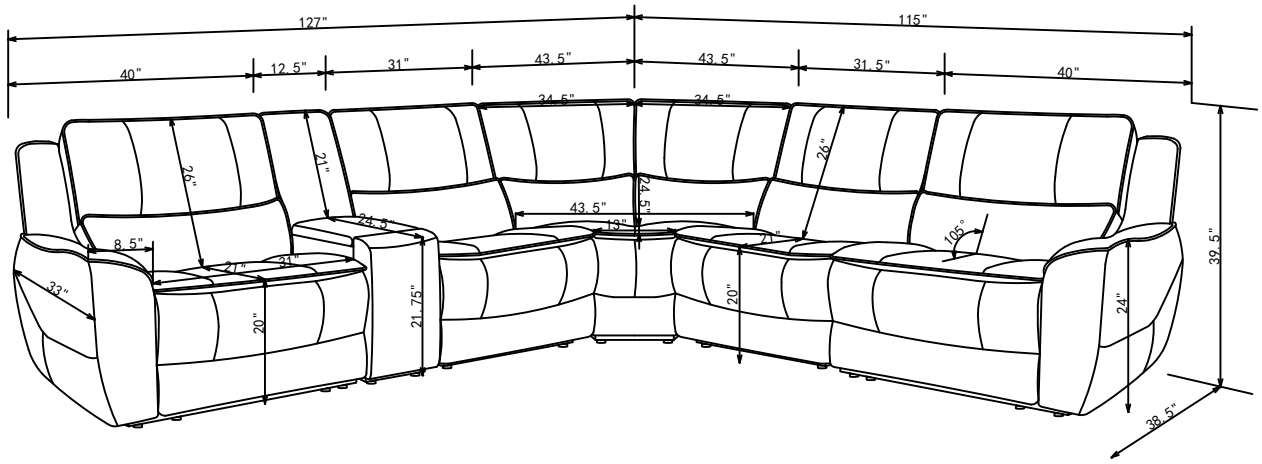

Note: Dimension tolerance +5%

ASSEMBLY INSTRUCTIONS

COASTER FINE FURNITURE

Fine Furniture for every stage of life

609690AC

ARMLESS CHAIR

ITEM :609690AC

ASSEMBLY INSTRUCTIONS

ASSEMBLY TIPS:

1.Remove hardware from box and sort by size.
2.Please check to see that all hardware and parts are present prior to start of assembly.
3.Please follow attached instruction in the same sequence as numbered to assure fast & easy assembly.

WARNING!
1.Don't attempt to repair or modify parts that are broken or defective. Please contact the store immediately.
2.This product is for home use only and not intended for commercial establishment.

ASSEMBLY TIME	2 MINUTES

PARTS IDENTIFICATION

A BACK **1 PC**

B BASE OF ARMLESS CHAIR 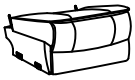 **1 PC**

ITEM :609690AC

ASSEMBLY INSTRUCTIONS

STEP 1

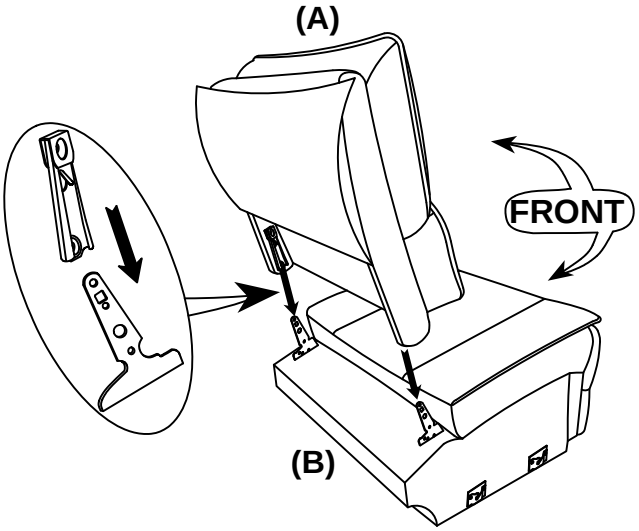

STEP 2

COMPLETE

STEP 3

OPTION1:

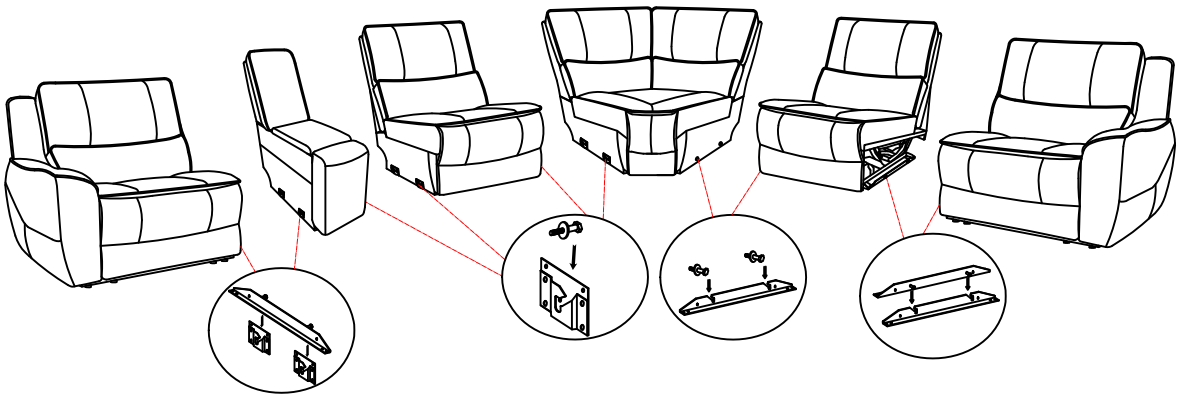

OPTION2:

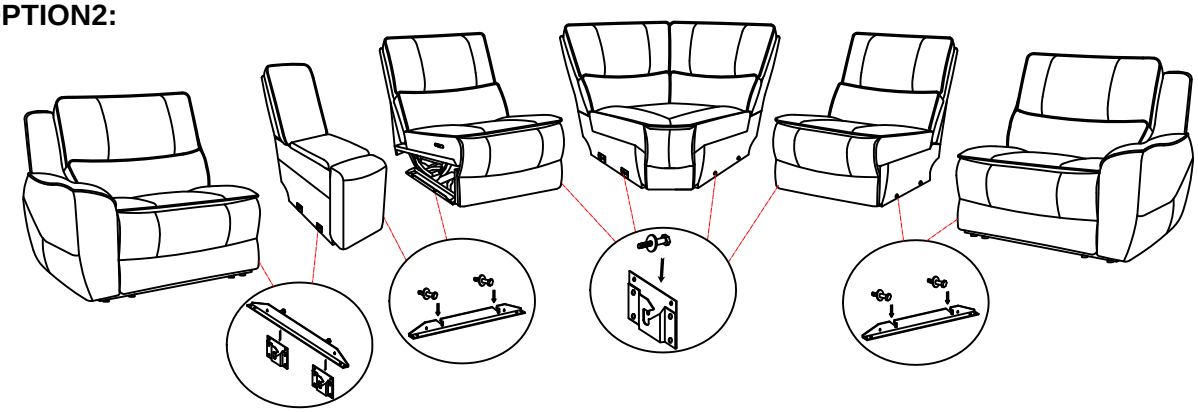

STEP 4

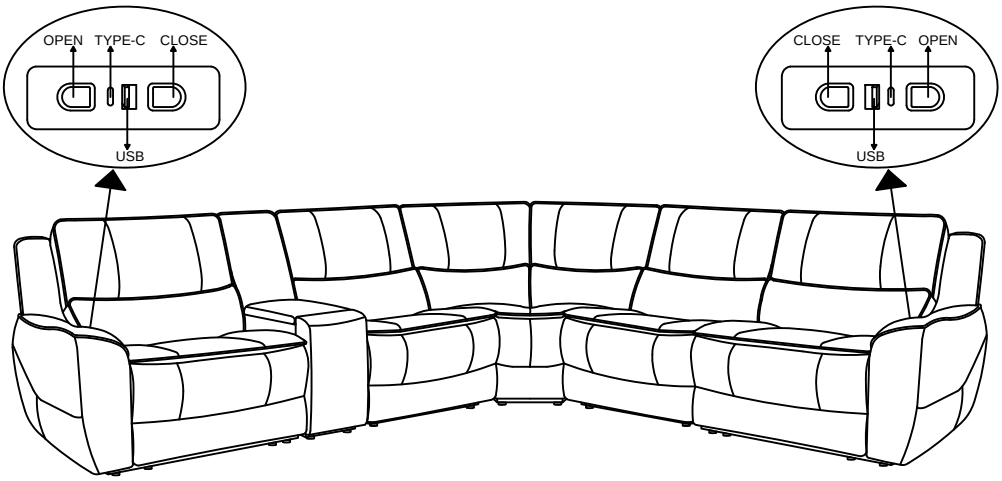

ITEM :609690AC

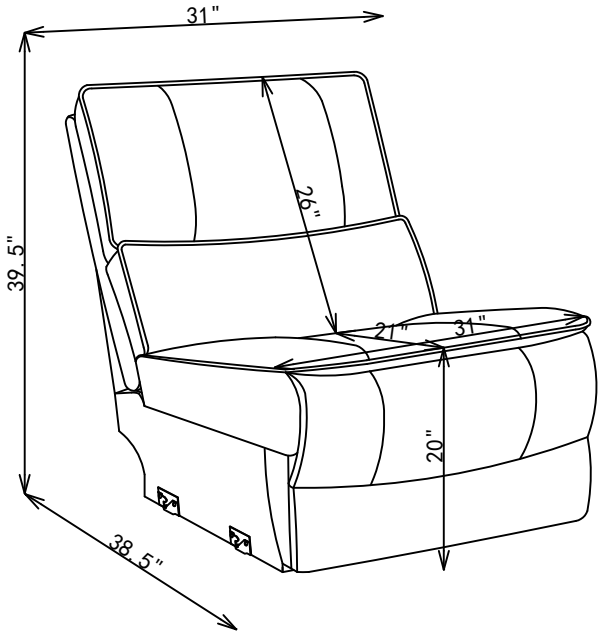

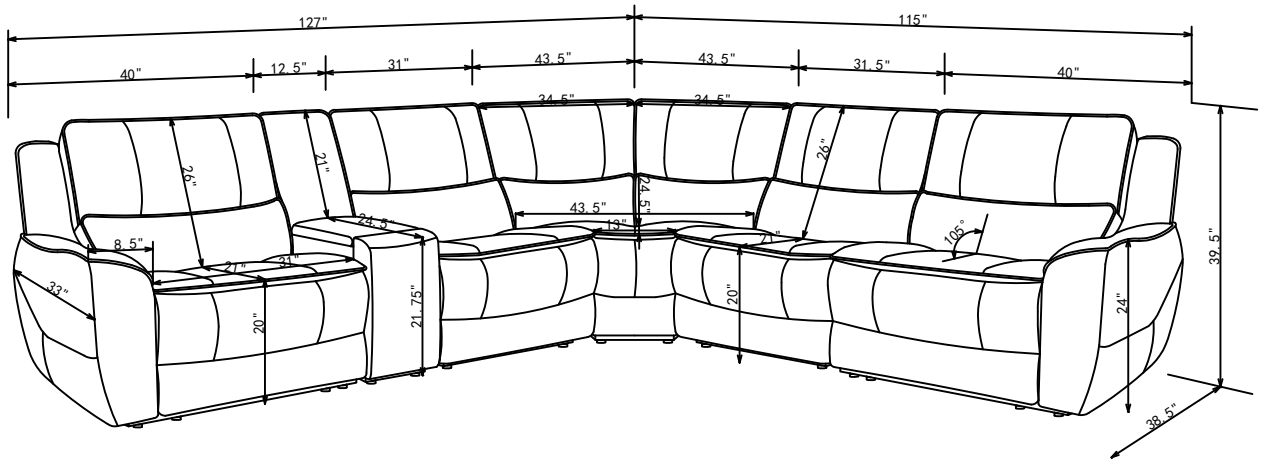

Note: Dimension tolerance +5%

ASSEMBLY INSTRUCTIONS

COASTER FINE FURNITURE

Fine Furniture for every stage of life

609690WDG
WEDGE

ITEM :609690WDG

ASSEMBLY INSTRUCTIONS

ASSEMBLY TIPS:

1.Remove hardware from box and sort by size.
2.Please check to see that all hardware and parts are present prior to start of assembly.
3.Please follow attached instruction in the same sequence as numbered to assure fast & easy assembly.

WARNING!
1.Don't attempt to repair or modify parts that are broken or defective. Please contact the store immediately.
2.This product is for home use only and not intended for commercial establishment.

ASSEMBLY TIME	2 MINUTES

PARTS IDENTIFICATION

A LEFT BACK **1 PC**

B RIGHT BACK **1 PC**

C BASE OF WEDGE **1 PC**

Z	HARDWARE PACKAGE		
NO	DESCRIPTION	FIGURE	QTY
1	THREADED RODS 5/16" * 100mm		4PCS
2	HEXAGON NUTS 5/16" * 13.5mm		4PCS
3	LOCK WASHER 5/16" * 13mm		4PCS+1PC SPARE
4	FLAT WASHER 5/16" * 19mm		4PCS+1PC SPARE
5	WRENCH 5/16"		1PC

ITEM :609690WDG

ASSEMBLY INSTRUCTIONS

STEP 1

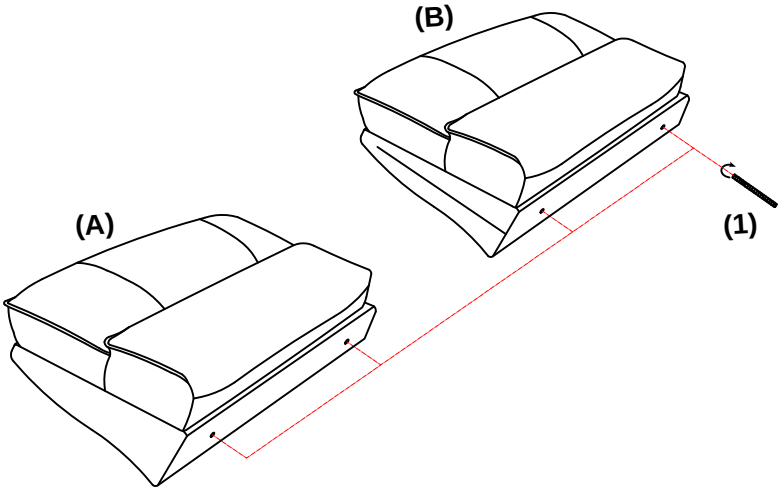

STEP 2

COMPLETE

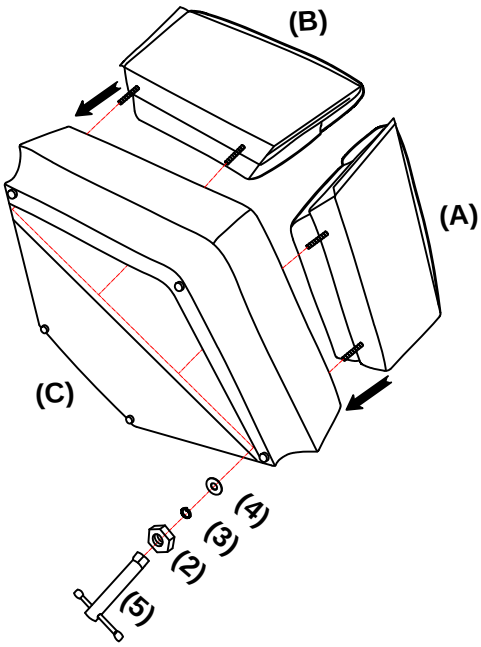

STEP 3

OPTION1:

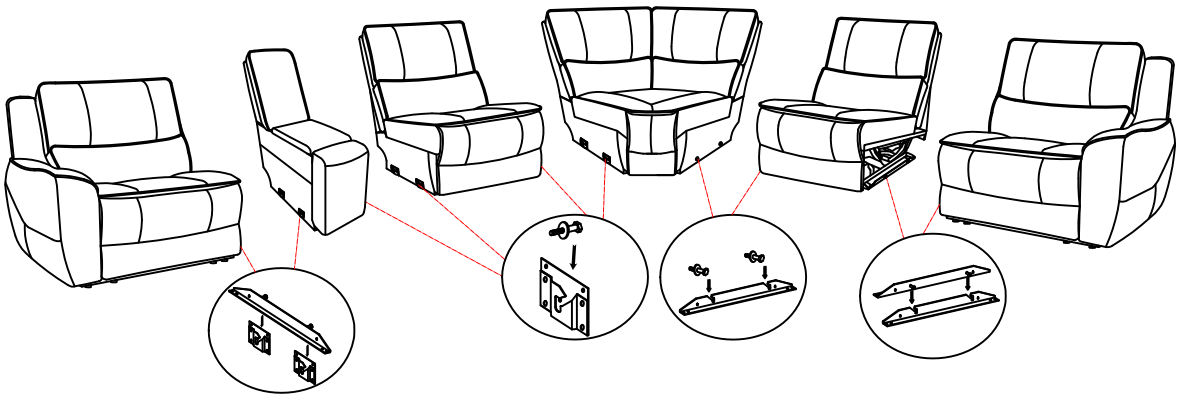

OPTION2:

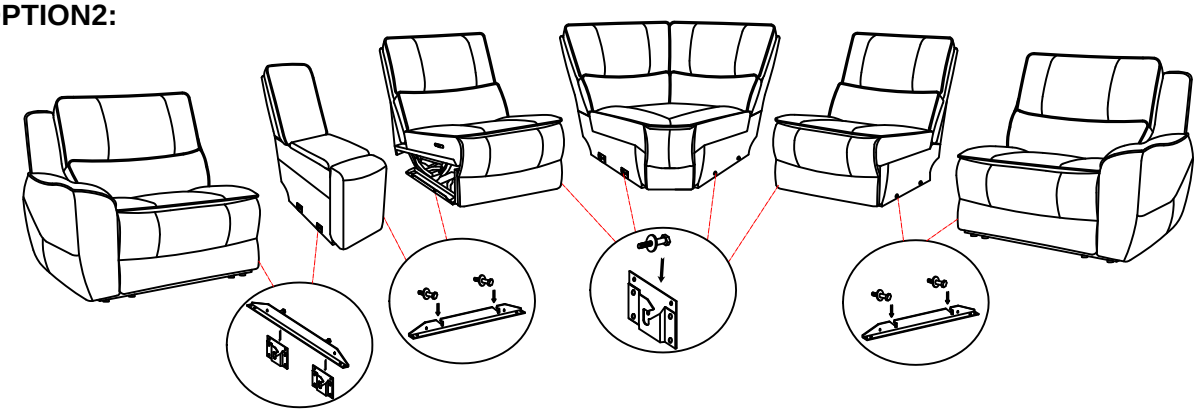

STEP 4

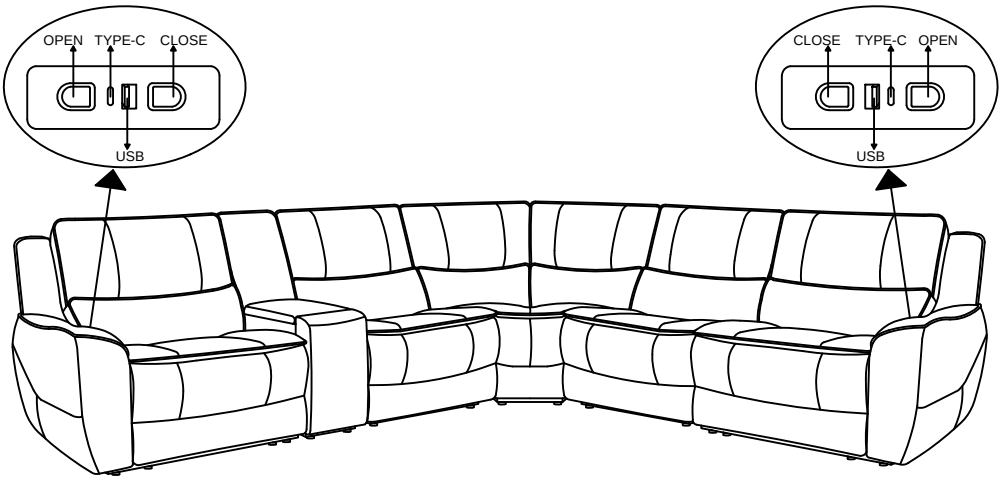

ITEM :609690WDG

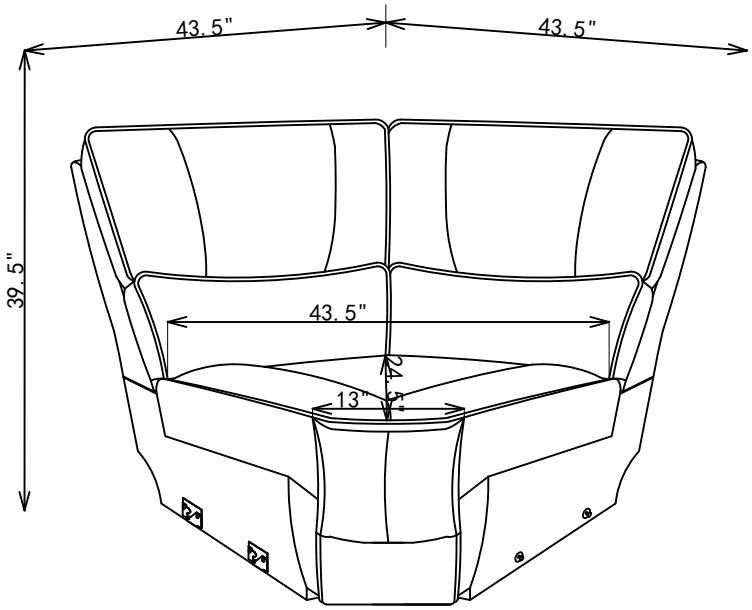

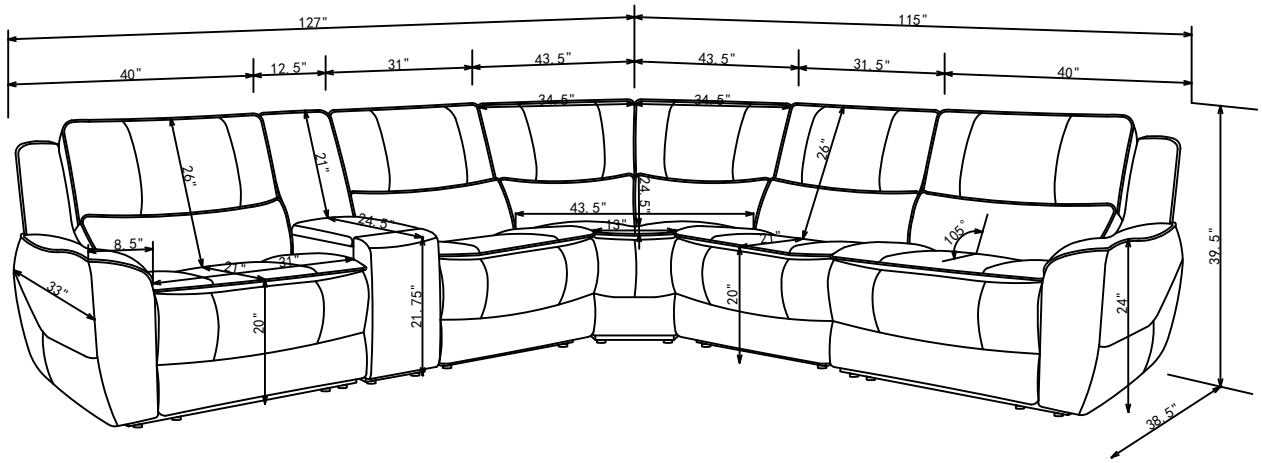

Note: Dimension tolerance +5%

ASSEMBLY INSTRUCTIONS

COASTER FINE FURNITURE

Fine Furniture for every stage of life

609690ARP

POWER ARMLESS RECLINER

ITEM :609690ARP

ASSEMBLY INSTRUCTIONS

ASSEMBLY TIPS:

1.Remove hardware from box and sort by size.
2.Please check to see that all hardware and parts are present prior to start of assembly.
3.Please follow attached instruction in the same sequence as numbered to assure fast & easy assembly.

WARNING!
1.Don't attempt to repair or modify parts that are broken or defective. Please contact the store immediately.
2.This product is for home use only and not intended for commercial establishment.

ASSEMBLY TIME	2 MINUTES

PARTS IDENTIFICATION

A BACK **1 PC**

B BASE **1 PC**

C PLUG-IN POWER SUPPLY **1 PC**

ITEM :609690ARP

ASSEMBLY INSTRUCTIONS

STEP 1

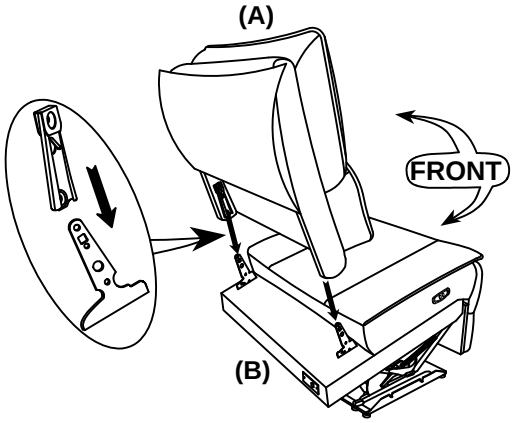

STEP 2

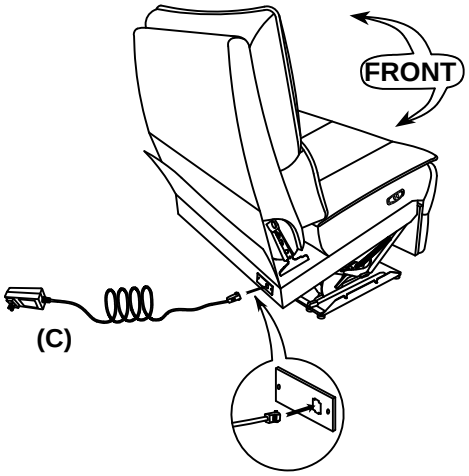

STEP 3

COMPLETE

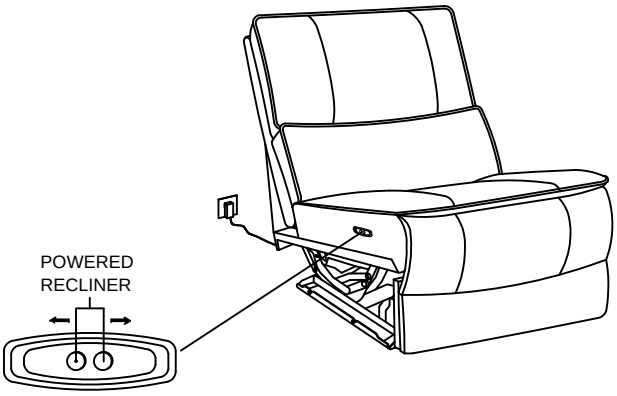

STEP 4

OPTION1:

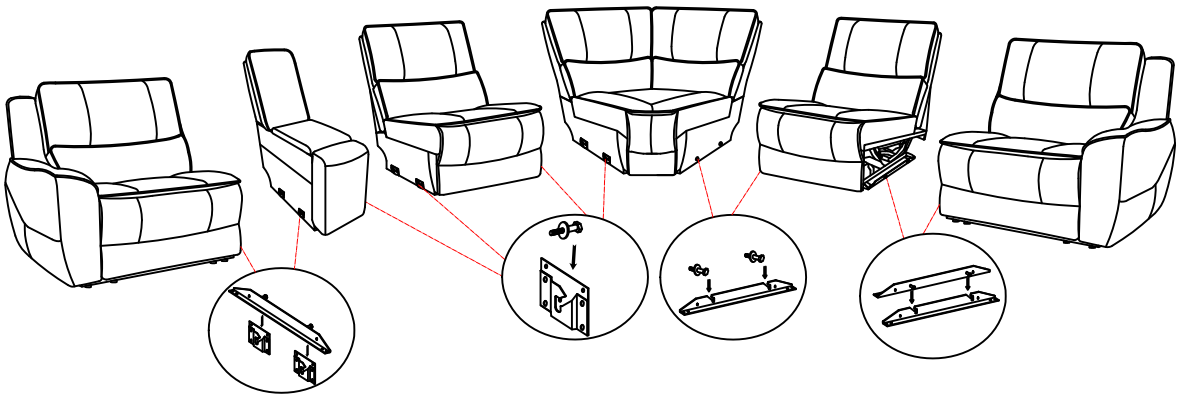

OPTION2:

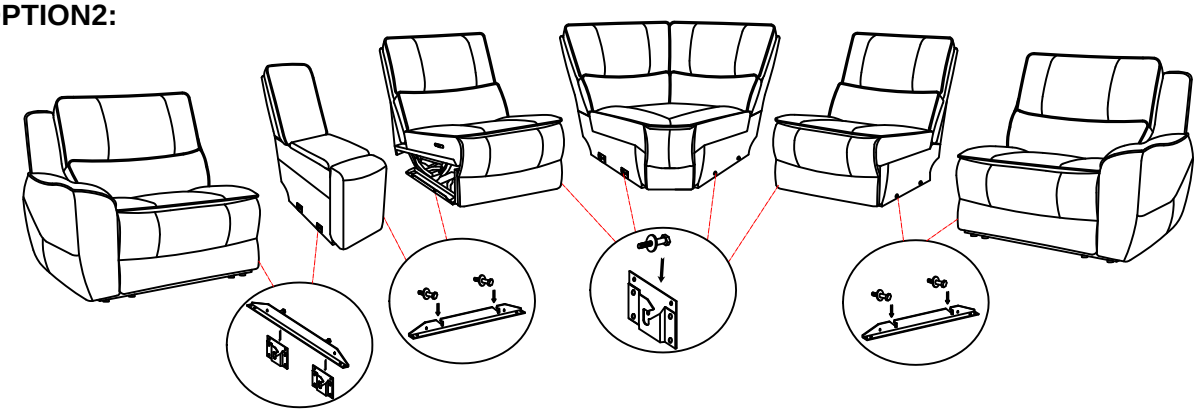

STEP 5

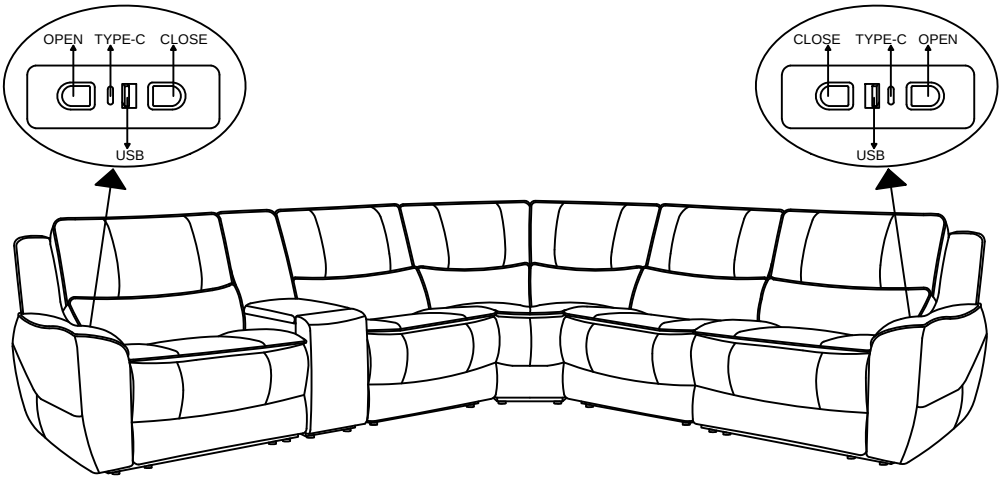

ITEM :609690ARP

Please follow below steps to install the 9V batteries when there is no power to operate the motion sofa.(Any model of 9V battery is applicable)

STEP 1

Open the marked battery door on the backup battery box.

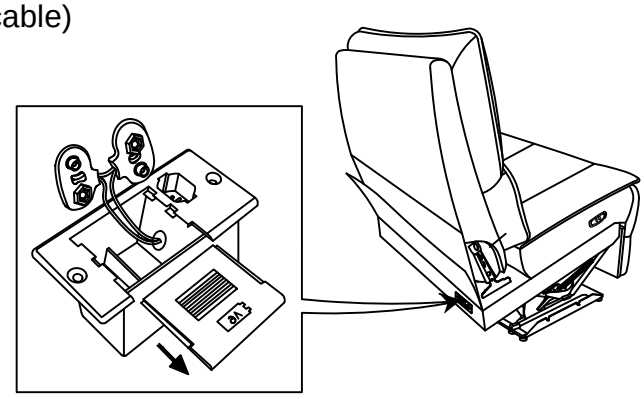

STEP 2

Install two 9V batteries in the backup battery box.(batteries are not included)

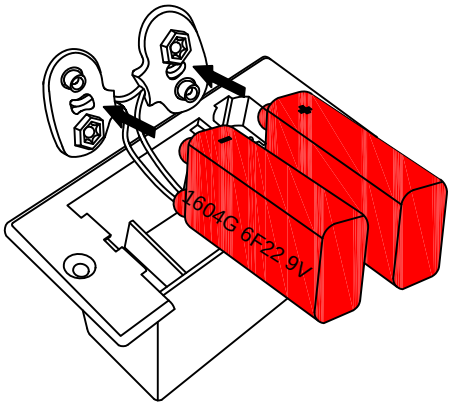

STEP 3

Push the batteries in.

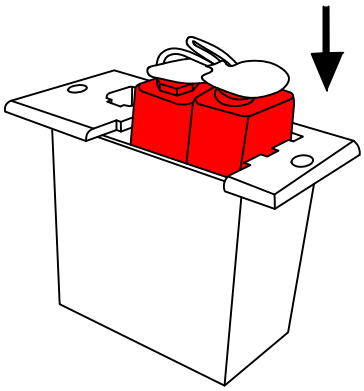

STEP 4

Close the box door.

Notice: Please don't keep the battery in the box when the power motion sofa is under daily use within power supply.

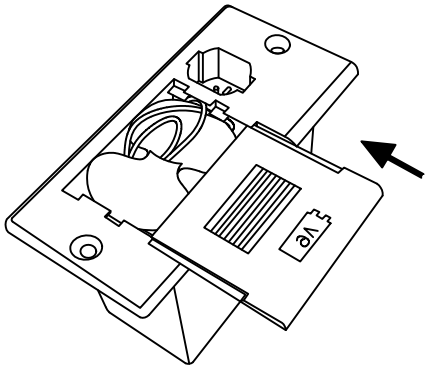

ITEM :609690ARP

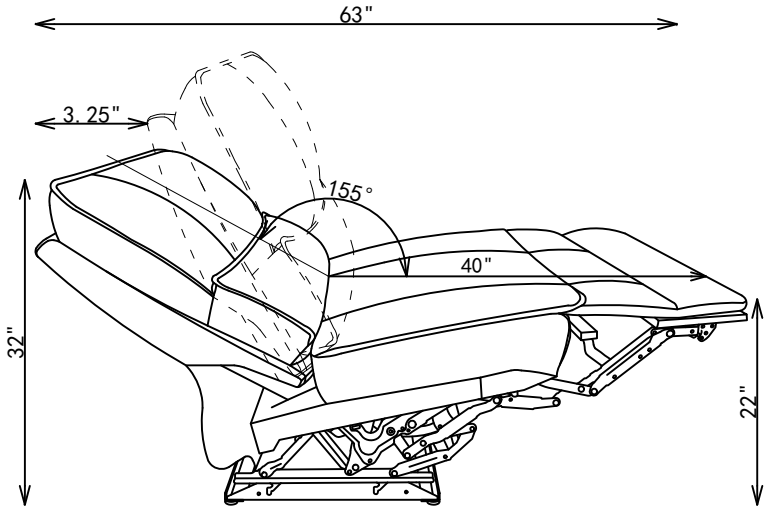

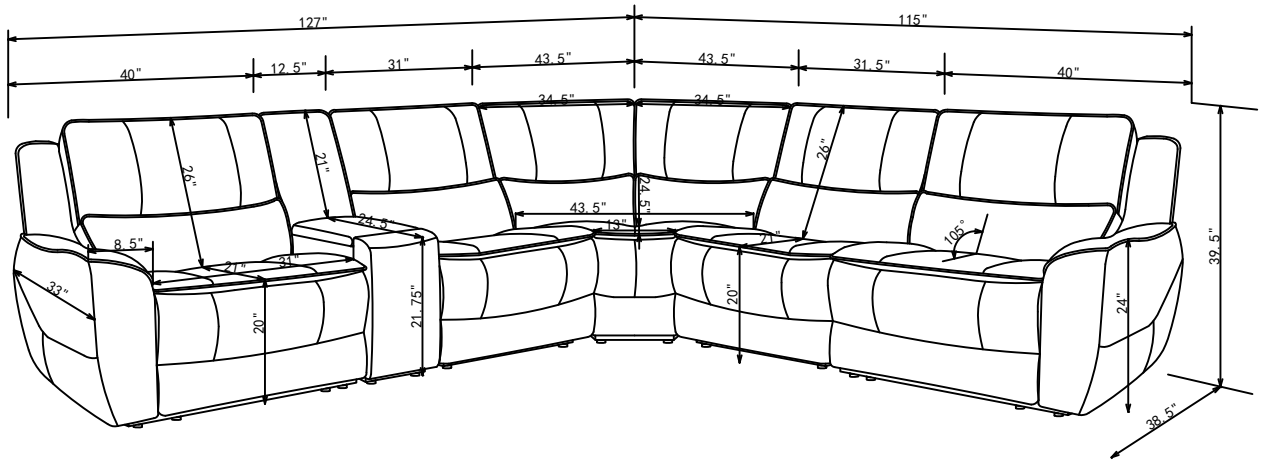

Note: Dimension tolerance +5%

ASSEMBLY INSTRUCTIONS

COASTER FINE FURNITURE

Fine Furniture for every stage of life

609690RRP

RAF POWER RECLINER

ITEM :609690RRP

ASSEMBLY INSTRUCTIONS

ASSEMBLY TIPS:

1.Remove hardware from box and sort by size.
2.Please check to see that all hardware and parts are present prior to start of assembly.
3.Please follow attached instruction in the same sequence as numbered to assure fast & easy assembly.

WARNING!
1.Don't attempt to repair or modify parts that are broken or defective. Please contact the store immediately.
2.This product is for home use only and not intended for commercial establishment.

ASSEMBLY TIME	2 MINUTES

PARTS IDENTIFICATION

A BACK 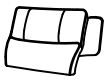 **1 PC**

B BASE 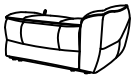 **1 PC**

ITEM :609690RRP

ASSEMBLY INSTRUCTIONS

STEP 1

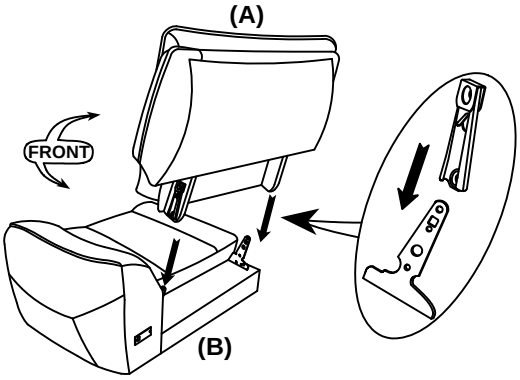

STEP 2

COMPLETE

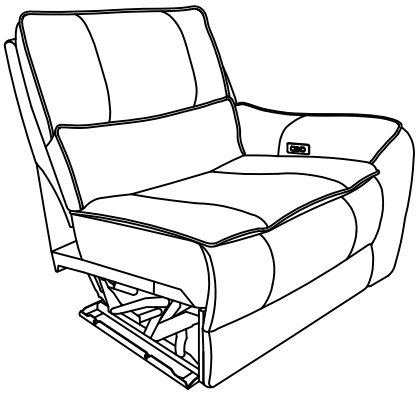

STEP 3

OPTION1:

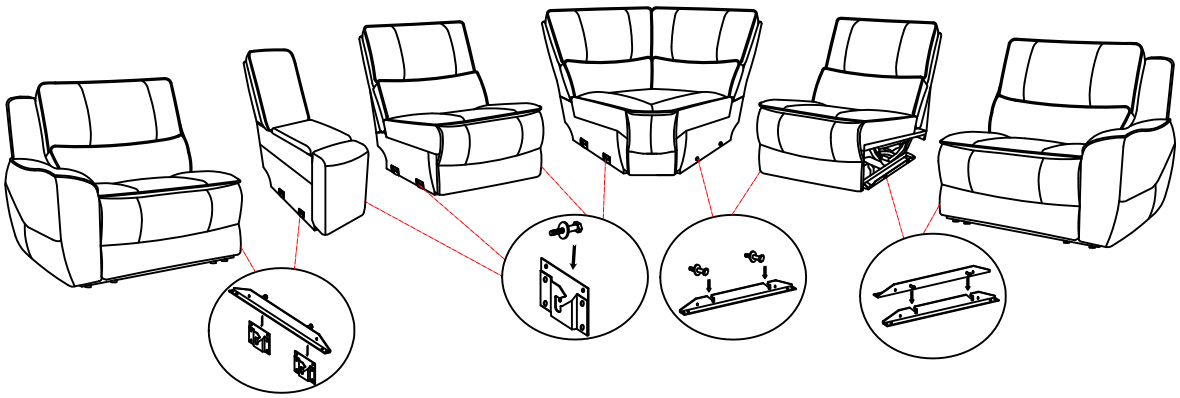

OPTION2:

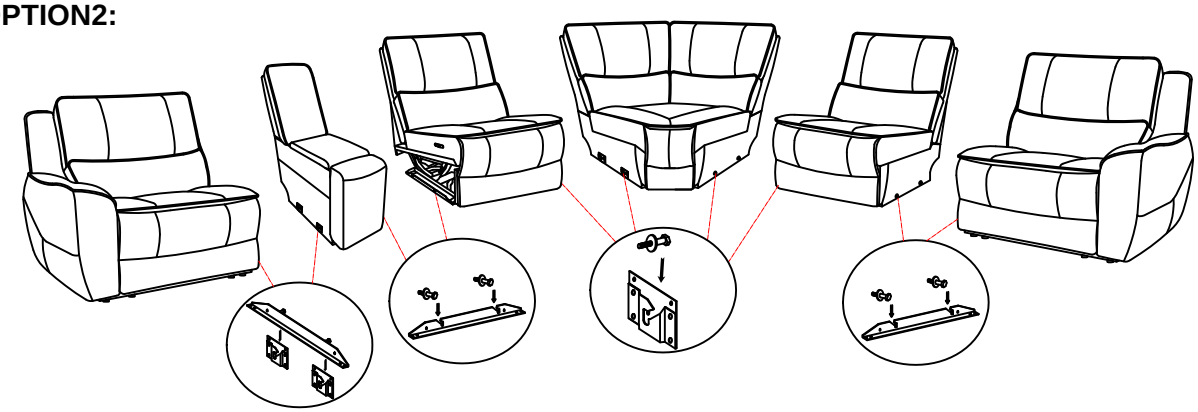

STEP 4

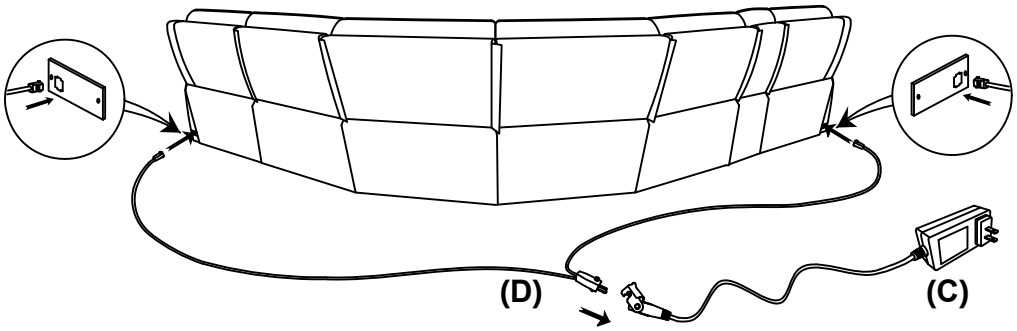

STEP 5

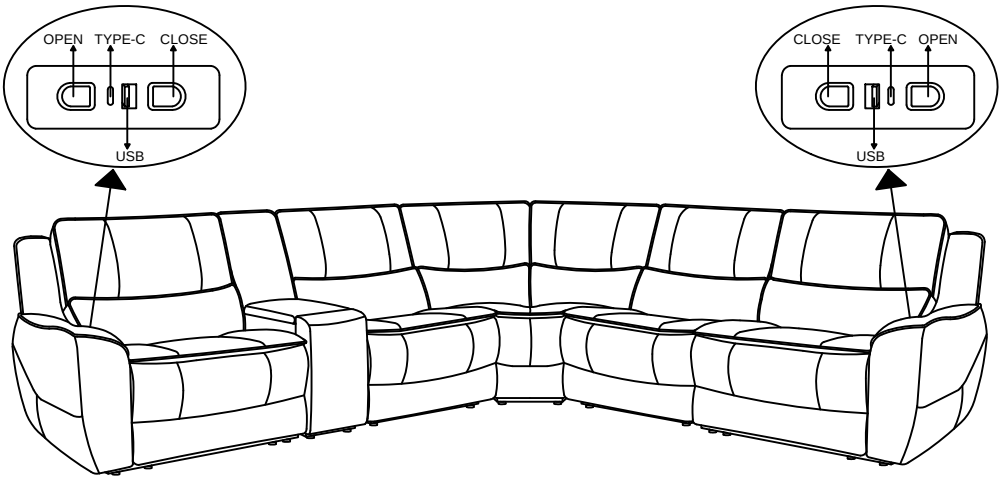

ITEM :609690RRP

Please follow below steps to install the 9V batteries when there is no power to operate the motion sofa.(Any model of 9V battery is applicable)

STEP 1

Open the marked battery door on the backup battery box.

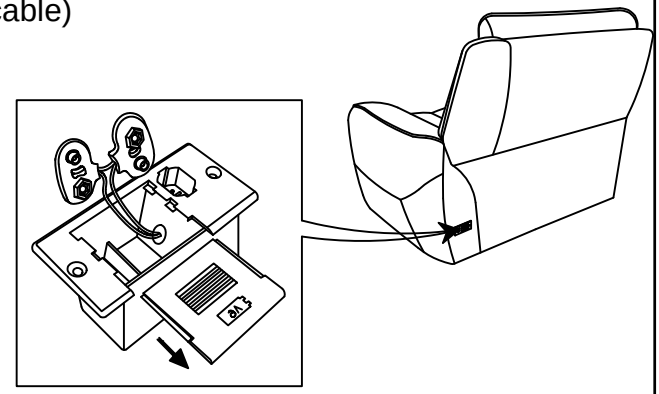

STEP 2

Install two 9V batteries in the backup battery box.(batteries are not included)

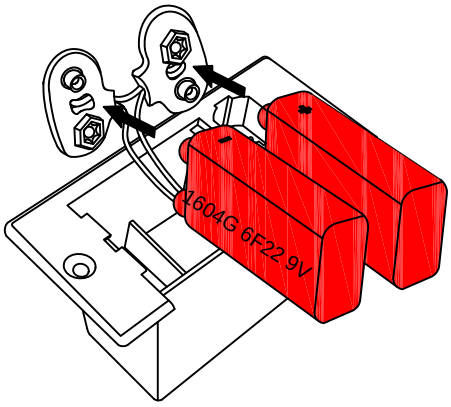

STEP 3

Push the batteries in.

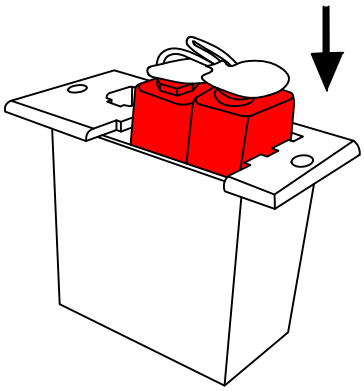

STEP 4

Close the box door.

Notice: Please don't keep the battery in the box when the power motion sofa is under daily use within power supply.

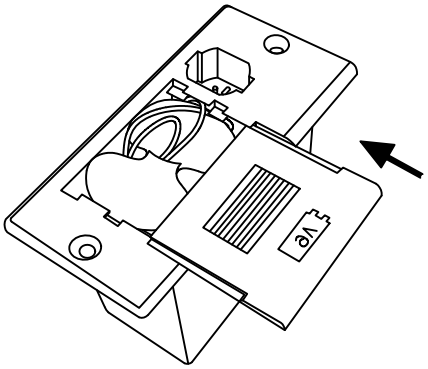

ITEM :609690RRP

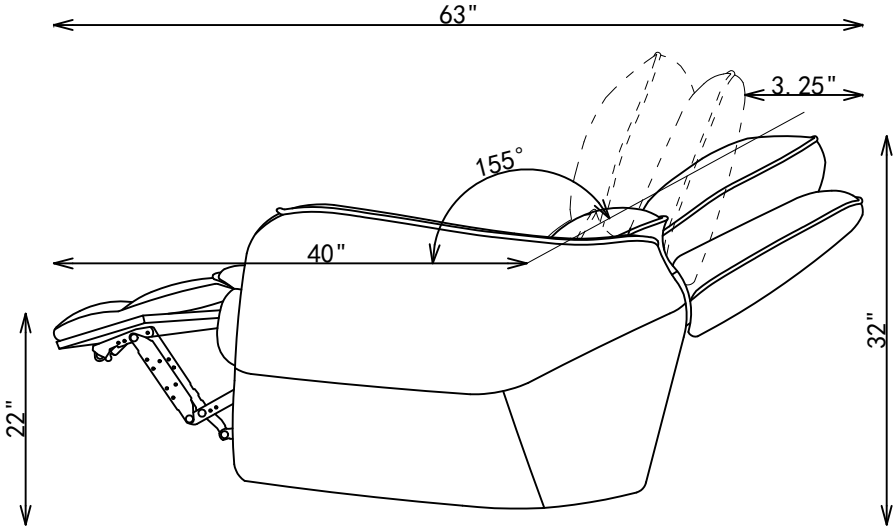

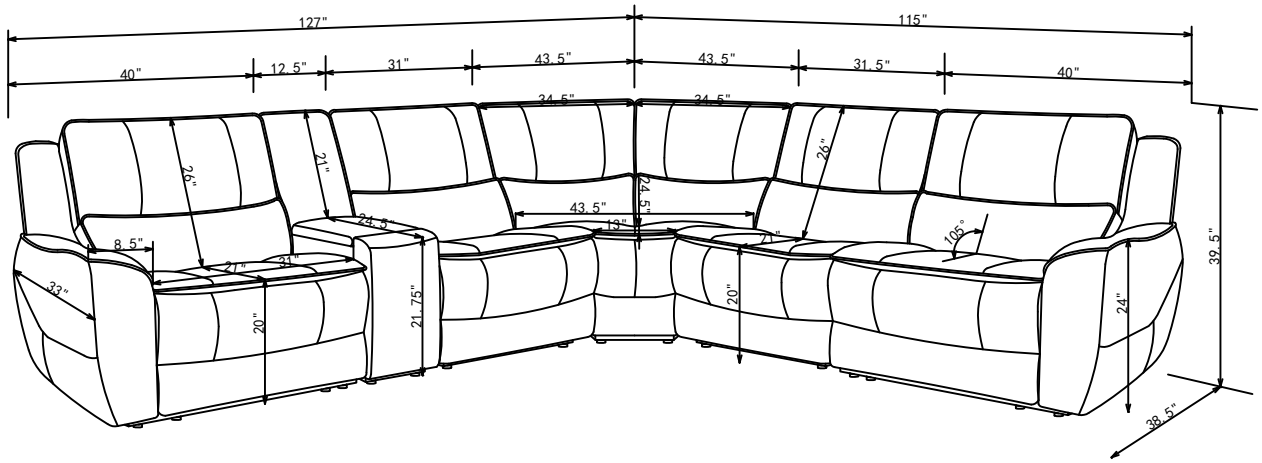

Note: Dimension tolerance +5%