BARSTOOL

ASSEMBLY INSTRUCTIONS

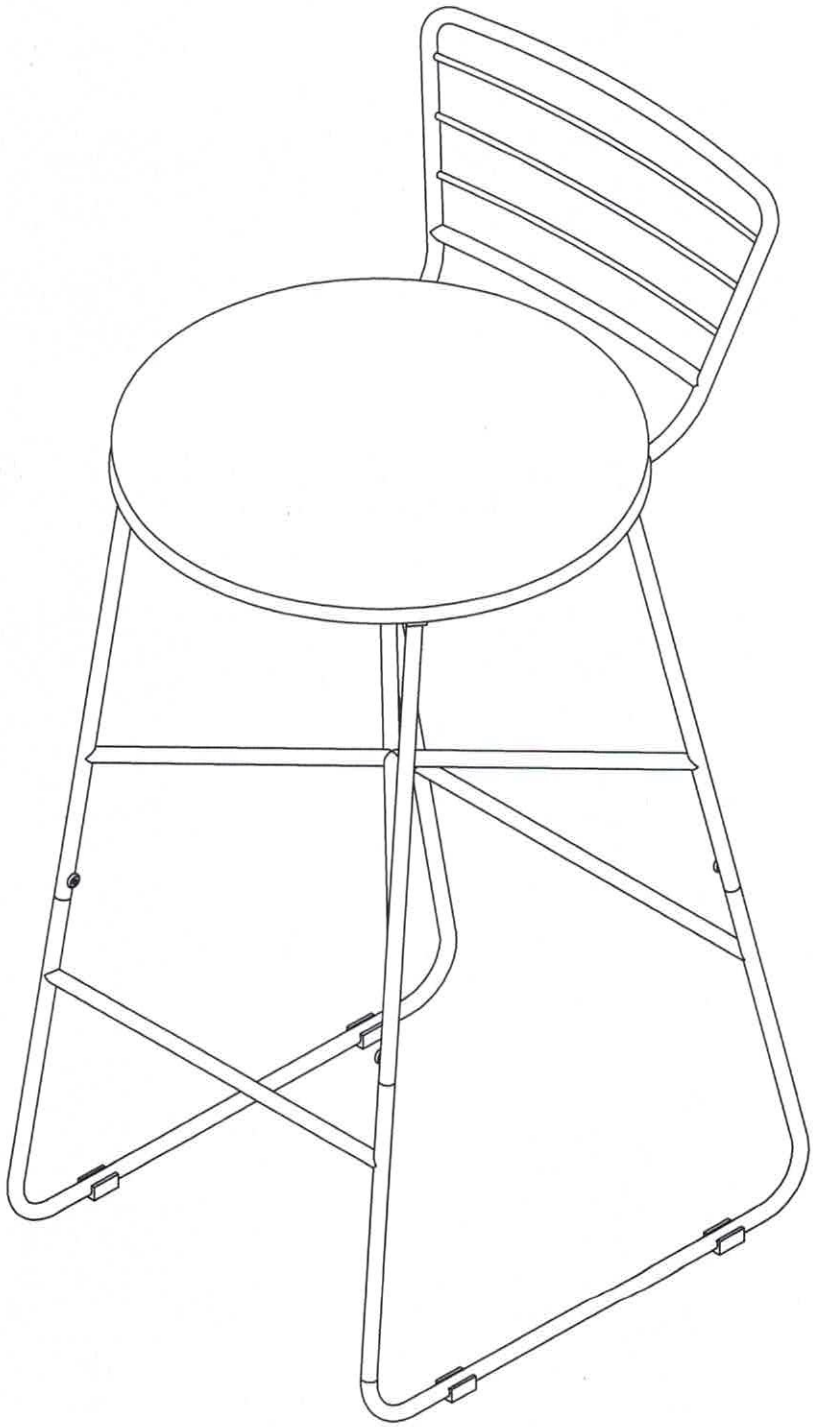

A



8 PCS

B

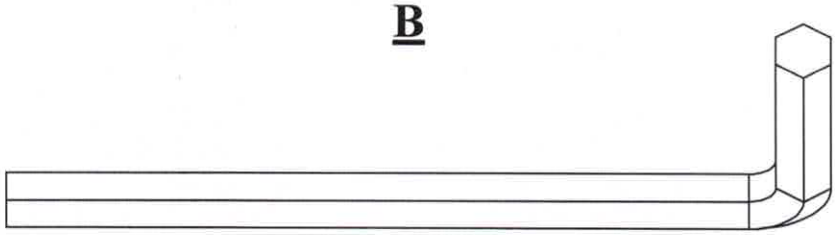

1 PC

1

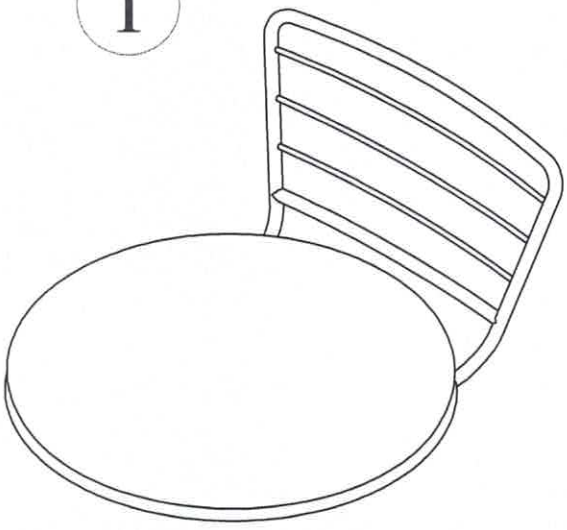

2

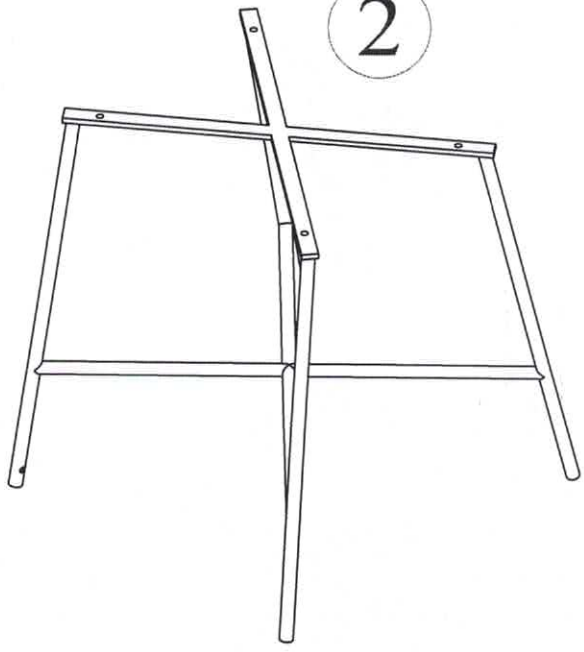

3

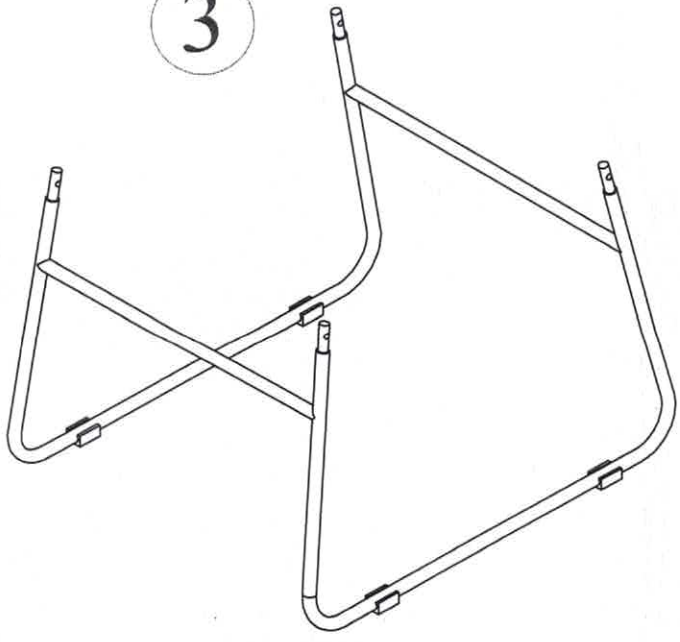

01



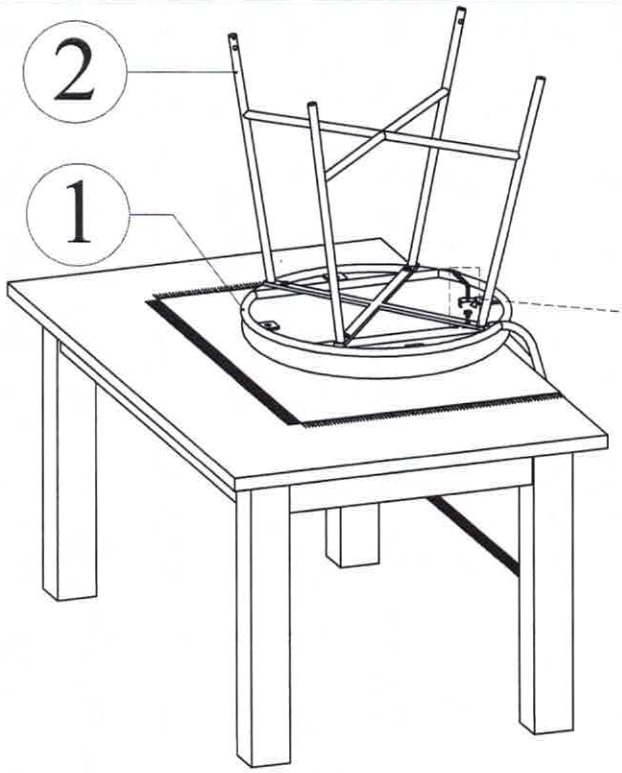

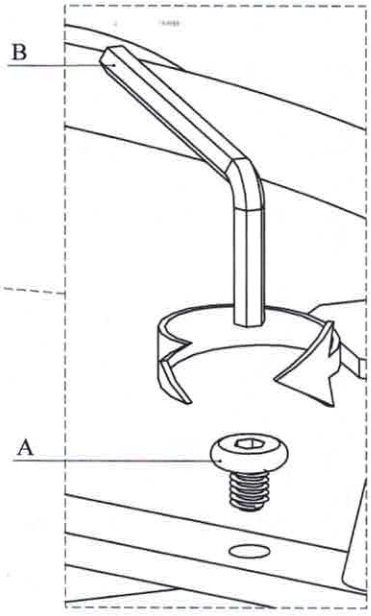

02



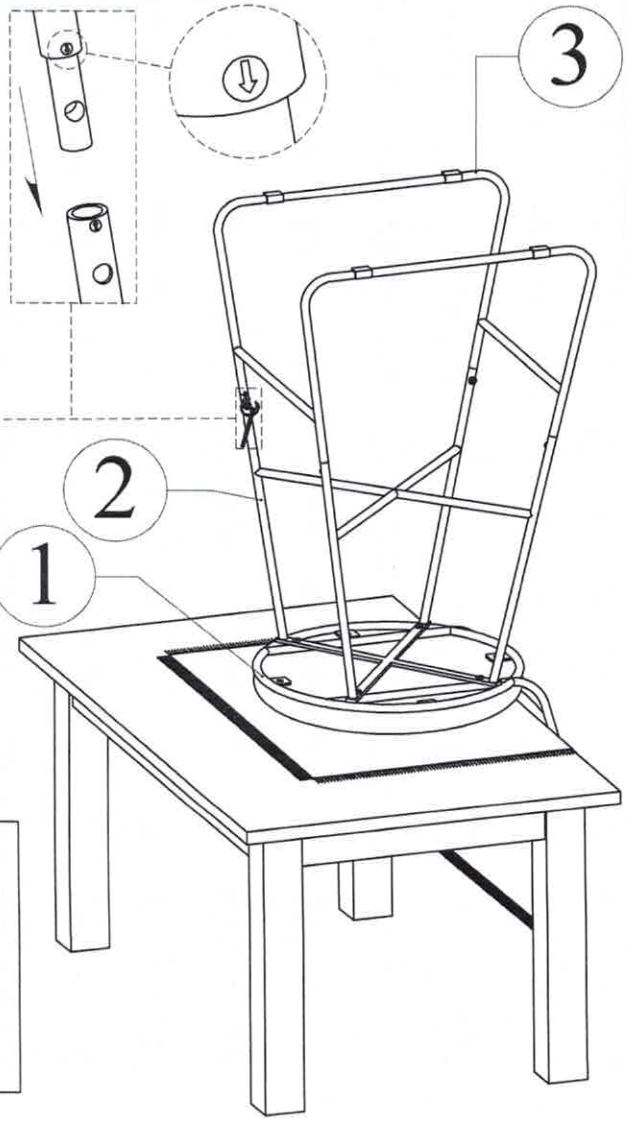



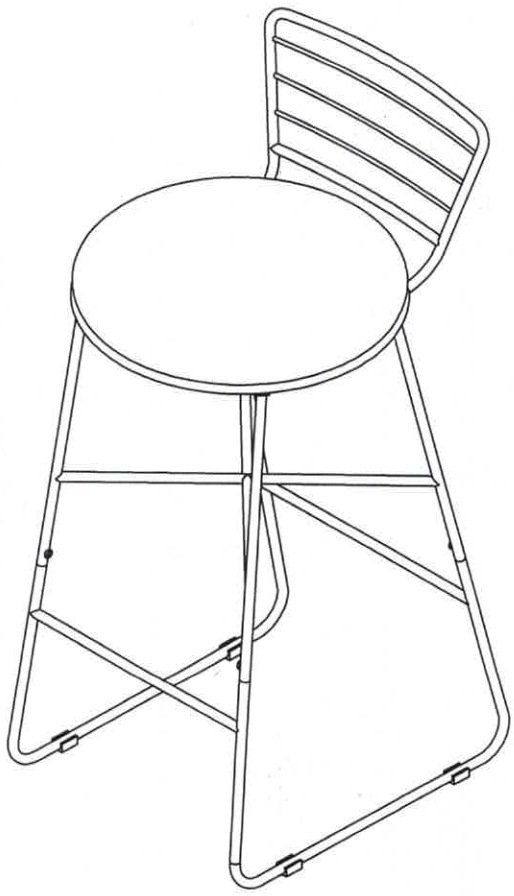

BE SURE TO CHECK ALL BOLTS ARE SECURELY TIGHTENED PRIOR USING THIS STOOL.