Assembly Instructions

Caution : You must read this before you proceed

Chair

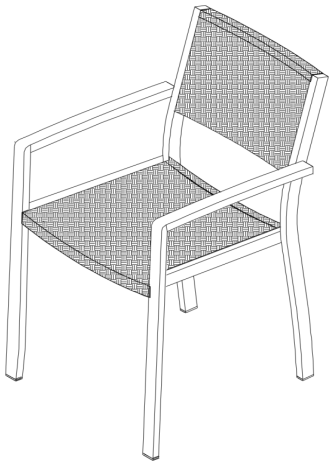

Parts List

Label	Picture	Description	QTY
A	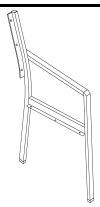	Right Armrest/Leg	1
B		Left Armrest/Leg	1
C	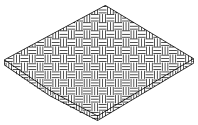	Seat	1
D	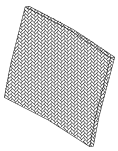	Backrest	1

Hardware

Label	Picture	Description	QTY
①		Bolt (M6*20MM)	5
②		Bolt (M6*35MM)	7
③		Bolt (M6*20MM)	5
④		Allen Key	1

Assembly Preparation

Before Beginning Assembly:

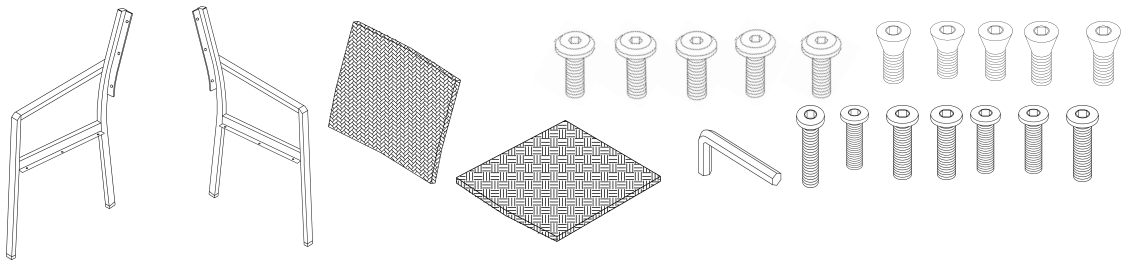

- Read instructions, cover to cover-
- Have 2 adults on hand for assembly-
- Do not assemble on flooring or carpet-
- Assemble on a clean non-marring surface (packing foam)-
- Save all packaging until finished-

Assembly Steps

Overview

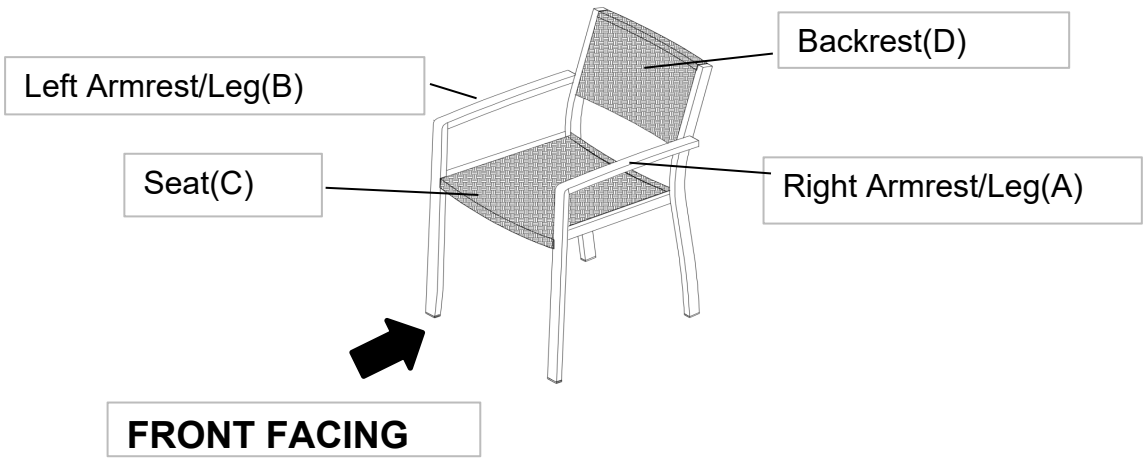

This Chair has multiple parts and may require up to 30 minutes to assemble. To give you an overview of the Chair parts, the above picture is to help you put the various parts into perspective. Please read through the instructions below to familiarise yourself with the parts and steps before assembly.

Step 1

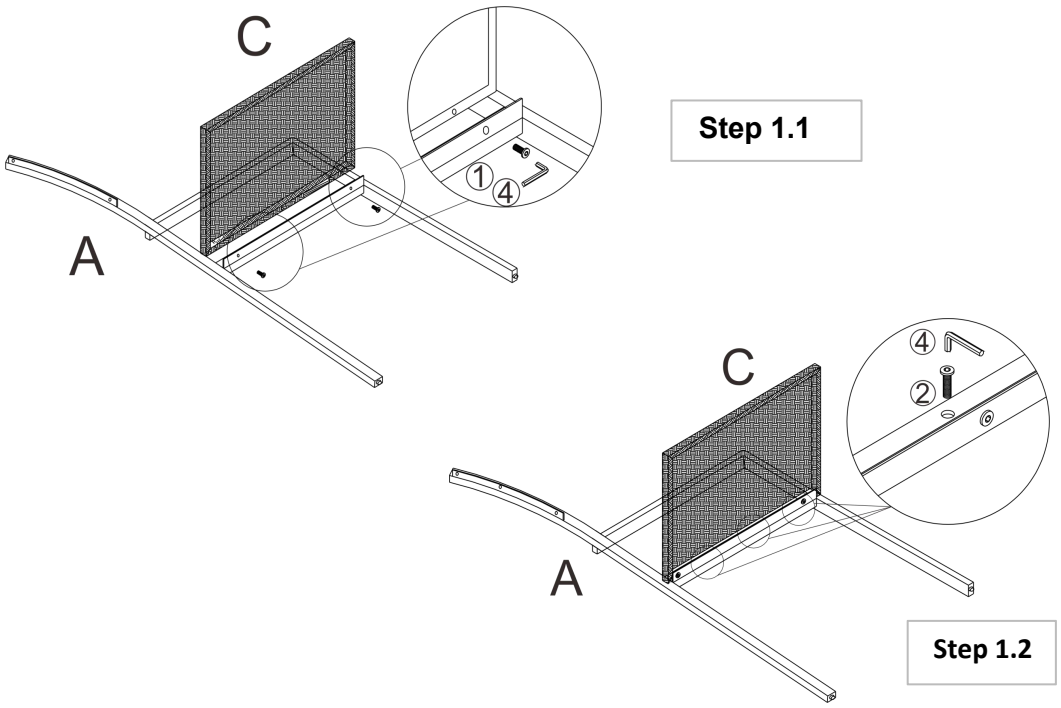

Open the carton and place all the parts onto a clean, non-marring surface.
1.1) Attach Seat(C) to Right Armrest/Leg(A) using Bolts(①) with Allen Key(④) as shown above.
1.2) Attach Seat(C) to Right Armrest/Leg(A) using Bolts(②) with Allen Key(④) as shown above.
Do not fully tighten the Bolts.

Step 2

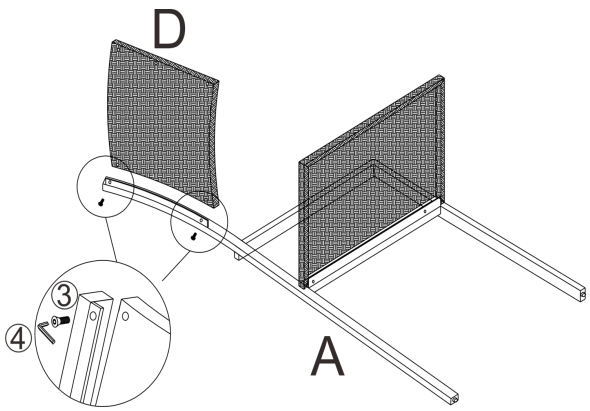

Attach Backrest(D) to Right Armrest/Leg(A) using Bolts(③) with Allen Key(④) as shown above.
Do not fully tighten the Bolts.

Step 3

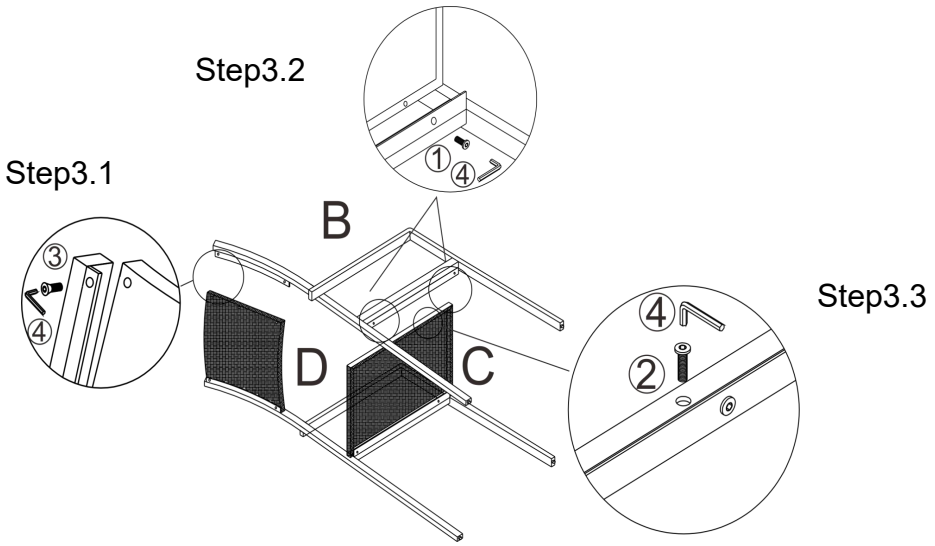

3.1) Attach the Left Armrest/Leg(B) to Backrest(D) using Bolts(③) with Allen Key(④) as shown above.
3.2) Attach the Left Armrest/Leg(B) to Seat(C) using Bolts(①) with Allen Key(④) as shown above.
3.3) Attach the Left Armrest/Leg(B) to Seat(C) using Bolts(②) with Allen Key(④) as shown above.
Do not fully tighten Bolts.

Step 4

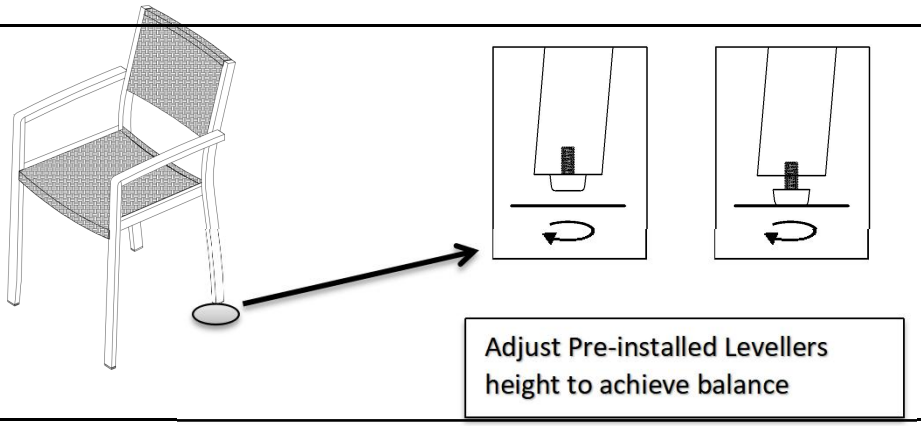

Stand the Chair up. Place the Chair on a **LEVEL SURFACE.**
Inspect it and make sure all parts are adequately connected. Gently and carefully, sit onto the Chair. This will help to align all parts at all joints. Then get off the Chair, and in a sequential manner, proceed to tighten all Bolts.
When tightening the Bolts, tighten sequentially.
DO NOT tighten any Bolt fully and then move on to the next one. This may cause the frame to warp. If there are still wobbles, loosen the Bolts and execute the same process.
If the Chair is not stable it could lead to damage to the product.
Your Chair is ready for use.
This Chair can only be used on a flat and level surface.

Care & Maintenance

- Do not put hot items directly on furniture surface
- Do not clean furniture with harsh cleansers or polish.
- To obtain the longest lifespan of your outdoor prodcts, minimizing exposure to direct sunlight is recommended.
- Children should not climb or jump on the furniture.
- Do not write on furniture without a padded barrier to protect the surface.
- To obtain the longest lifespan of your outdoor products, avoid extended and lengthy exposure to rain, snow, and direct sunshine. Whenever possible cover the product and /or place under patio or awnings.
- Not for commercial use. For residential use only .
- Stains may be removed with mild soap solution and damp cloth.
- Keep away from sources of ignition.

- Dust and pick-up spills using a clean, non-colored, lint-free cloth .

What is Proposition 65?
Proposition 65 is a California law that requires warning labels on products that may contain one of more than 800-plus chemicals or ingredients that the California Office of Environmental Health Hazard Assessment (OEHHA) has deemed to cause cancer or other reproductive toxicity. Chemicals and elements on this list include wood dust, brass, and other everyday substances, which can be found in very common household items, such as: lamps, tableware, jewelry, crystal glasses, electric cords, beauty products, automobiles, and furniture.

Why Did I Find a Proposition 65 Warning on My Home Goods Product?
We include Proposition 65 warnings on all of our products because there is always a chance that one of the 800-plus common chemicals and ingredients listed under this law could potentially be on our furniture or packing materials. We risk large fines under this law, if we don't include this warning.

Should I worry?
We realize you may be worried finding this warning on our products, but we want to reassure you that the hazardous exposure limits for any of these chemicals have never been found on furniture products that we've shipped to our customers. Additionally, this warning label is very common and can be found on almost every piece of furniture sold in the state of California.

Just How Common Are Proposition 65 Warnings?
Proposition 65 warnings have become so common in California that it is hard to take a trip to a local bank, grocery store, or restaurant without finding at least one warning. In fact, even the Disney Land Resort has a Proposition 65 warning: