Owner Manual

MAINTENANCE AND WARNINGS

Thank You For Choosing Our Furniture.
Please read the instructions and warnings carefully before use, to ensure safe and satisfactory operation of this product.

NOTE :
This brochure contains IMPORTANT safety info. Please read and keep it for future reference.

LB
Weight Limitation
80 LBS

Installation:
40 minutes.

Two Person

Before You Start

Please follow the steps below:

- Unbox the package and check if all parts and accessories are complete.
- If you find something missing, stop assembly and contact your supplier immediately.
- Please do not completely tighten all the hardware until the entire assembly is completed! Be sure to tighten all the hardware once the assembly completed.
- NOTE:Should be assembled on soft surface to keep balance.

After-Sales Service

- If you encounter any issues or need technical support during use, please contact our after-sales team. We offer long-term maintenance and warranty services.

Warranty

We strive to offer high , quality products, and we also try our best to satisfy each and every customer that orders from us with product or service as needed. Each customer must provide a record of their order such as the order number, or item receipt for any items that are out of the warranty period you may also still receive replacement parts by purchasing them with our company if they are available.

Are you having dificulty with assembly? Missing parts?

For return, please check the return policy with the retailer or market place you bought from. Appreciate your purchasing from us. Pop up your life by our furniture piece!

Daily Maintenance

- Keep furniture away from heat.
- Do not use cleaning agents containing acids, alkalis,or corrosive substances, as they may damage the surface. It is recommended to use neutral cleaning agents or specialized furniture cleaners.
- Do not place furniture under direct sunlight, material will possibly fade over time.
- Do not use on site dry cleaning machine.
- Children should not climb or jump on the furniture.
- Do not write on furniture without a padded barrier to protect the surface.
- Not for commercial use, for residential use only.

Exploded Diagram

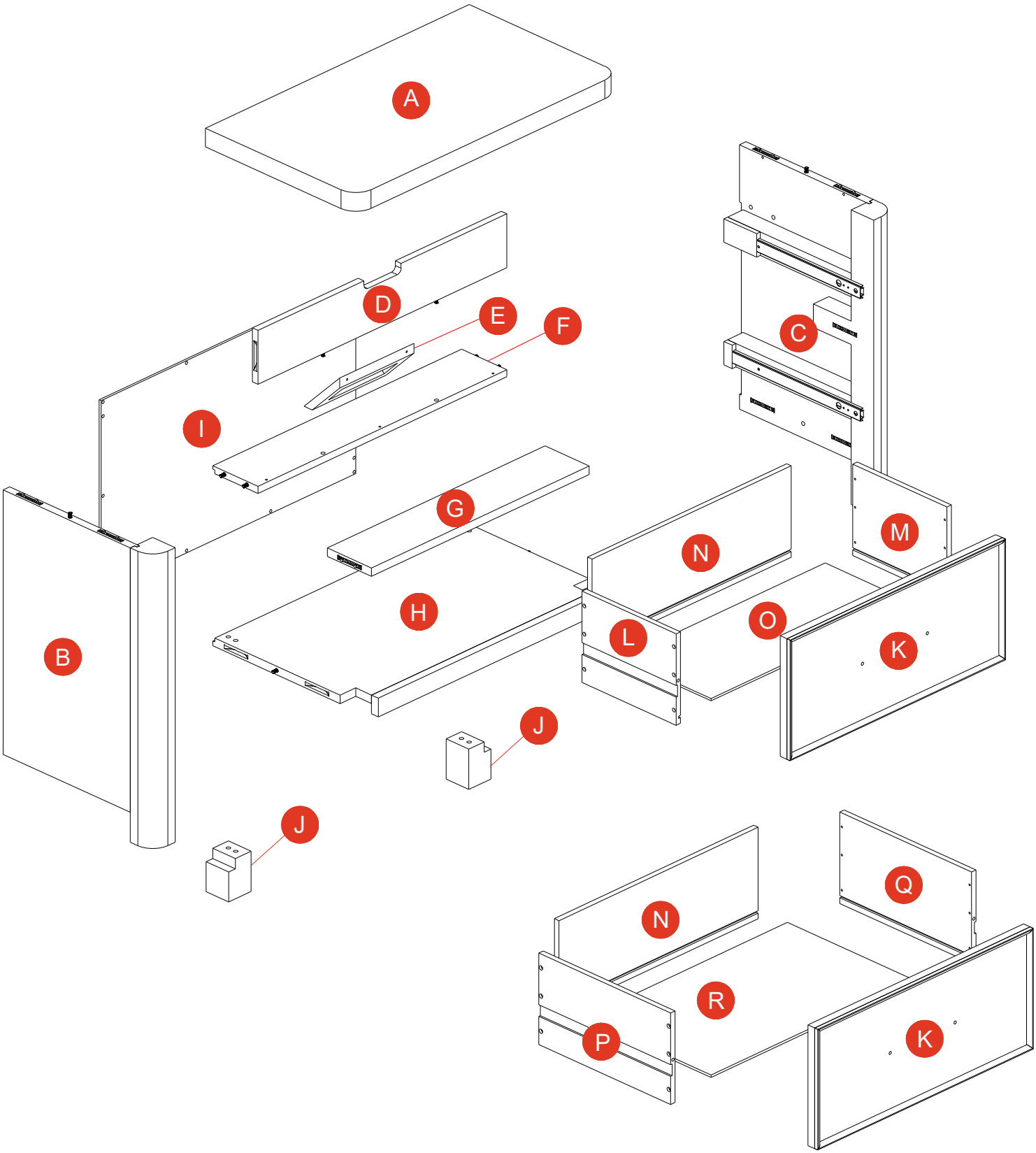

Parts List

A ×1

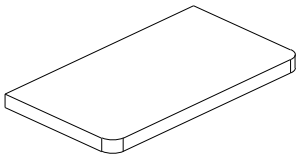

top panel

B ×1

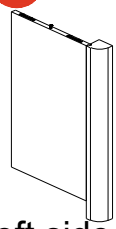

Left side panel

C ×1

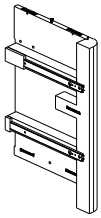

right side panel

D ×1

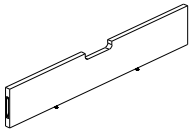

vertical panel

E ×1

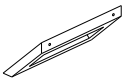

Rear power panel

F ×1

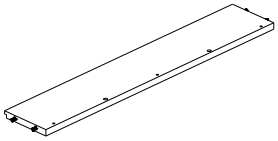

Drawer panel

G ×1

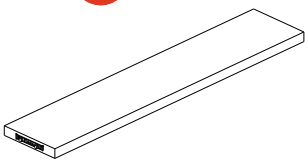

Drawer panel

H ×1

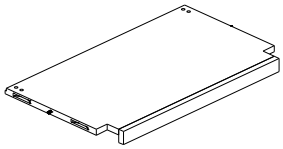

Bottom panel

I ×1

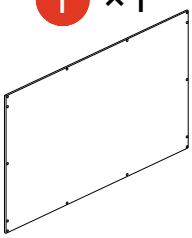

Back panel

J ×2

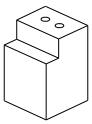

Leg

K ×2

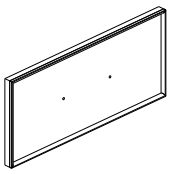

Drawer front

L ×1

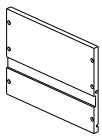

Drawer side left

M ×1

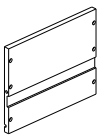

Drawer side left

N ×2

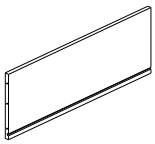

Drawer back

O ×1

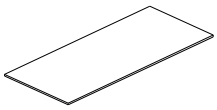

Drawer bottom

P ×1

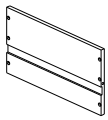

Drawer side left

Q ×1

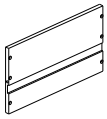

Drawer side left

R ×1

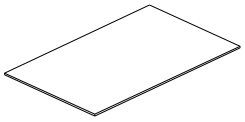

Drawer back

Hardware Liste

1 ×4+1

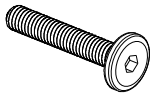

Bolt
1/4"x35mm

2 ×14+2

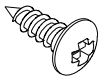

Screw
4x15mm

3 ×3

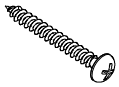

Screw
4x30mm

4 ×4+1

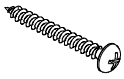

screw
4x25mm

5 ×2

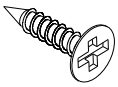

Screw
3.5x15mm

6 ×24+3

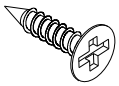

Screw
4x25mm

7 ×4+1

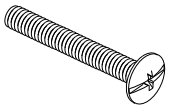

Small bolt
Ø5/32"x30mm

8 ×2

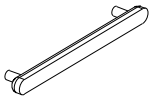

Handle

9 ×4

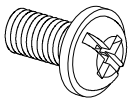

Bolt
1/4"x35mm

10 ×4

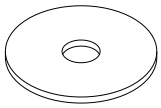

Flat Washer

11 ×1

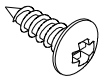

Screw
4x15mm

12 ×1

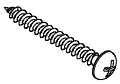

screw
4x35mm

13 ×1

Anchor

14 ×1

Tie

15 ×2

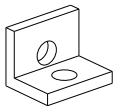

L-bracket

16 ×1

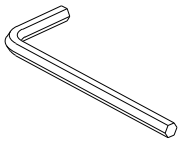

Allen key
M4

17 ×1

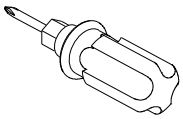

Screwdriver

18 ×1

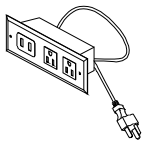

Socket

Assembly Instructions

Step 1

1.Connect part (F) to part (D) with screw (3), tight screw with screwdriver (17).

3	x 3	4x30mm
17	x 1	Screwdriver

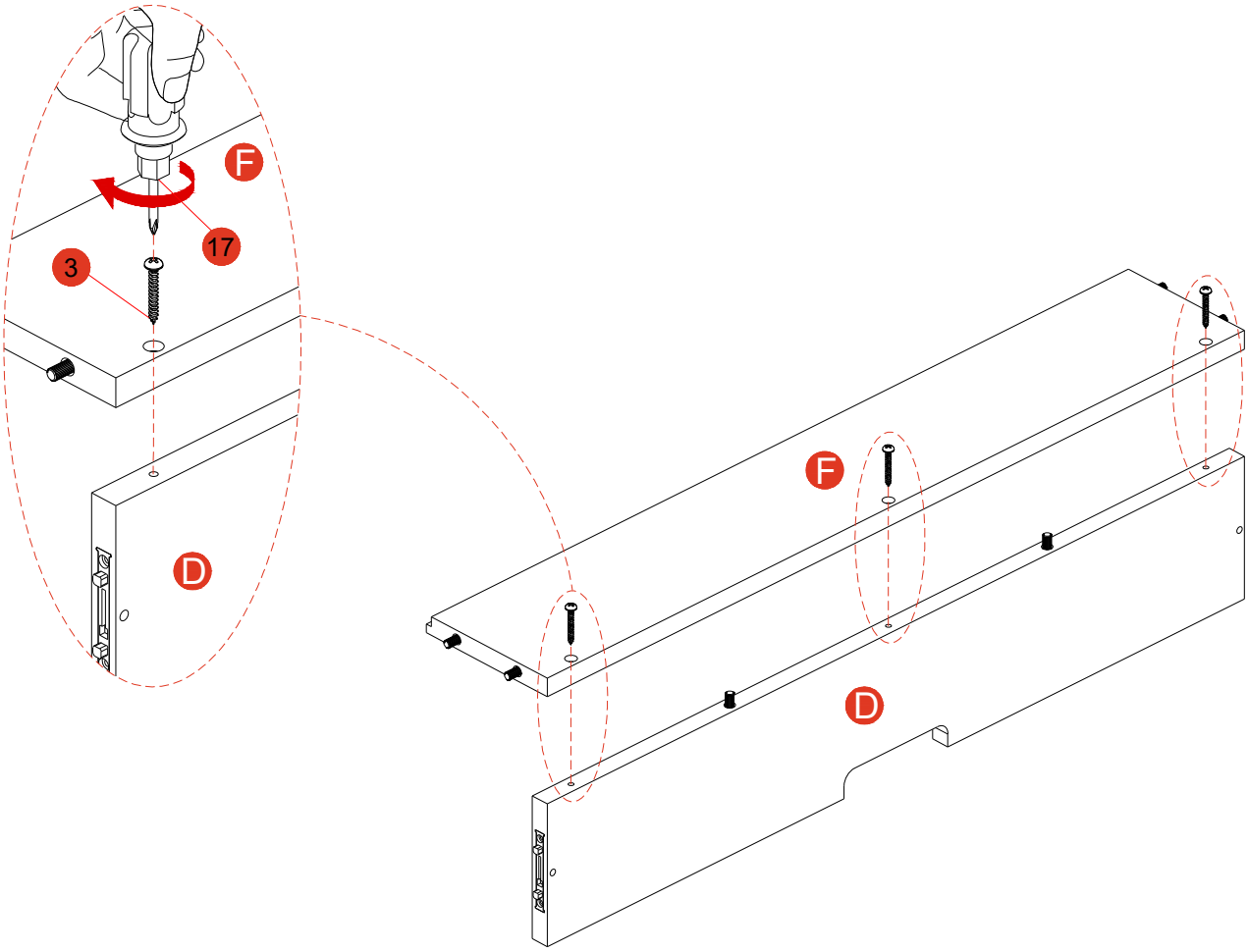

Step 2

Insert part (D&F&H) to part (C), make sure all hole aligned and tight them with allen key (16).

16	x 1	M4

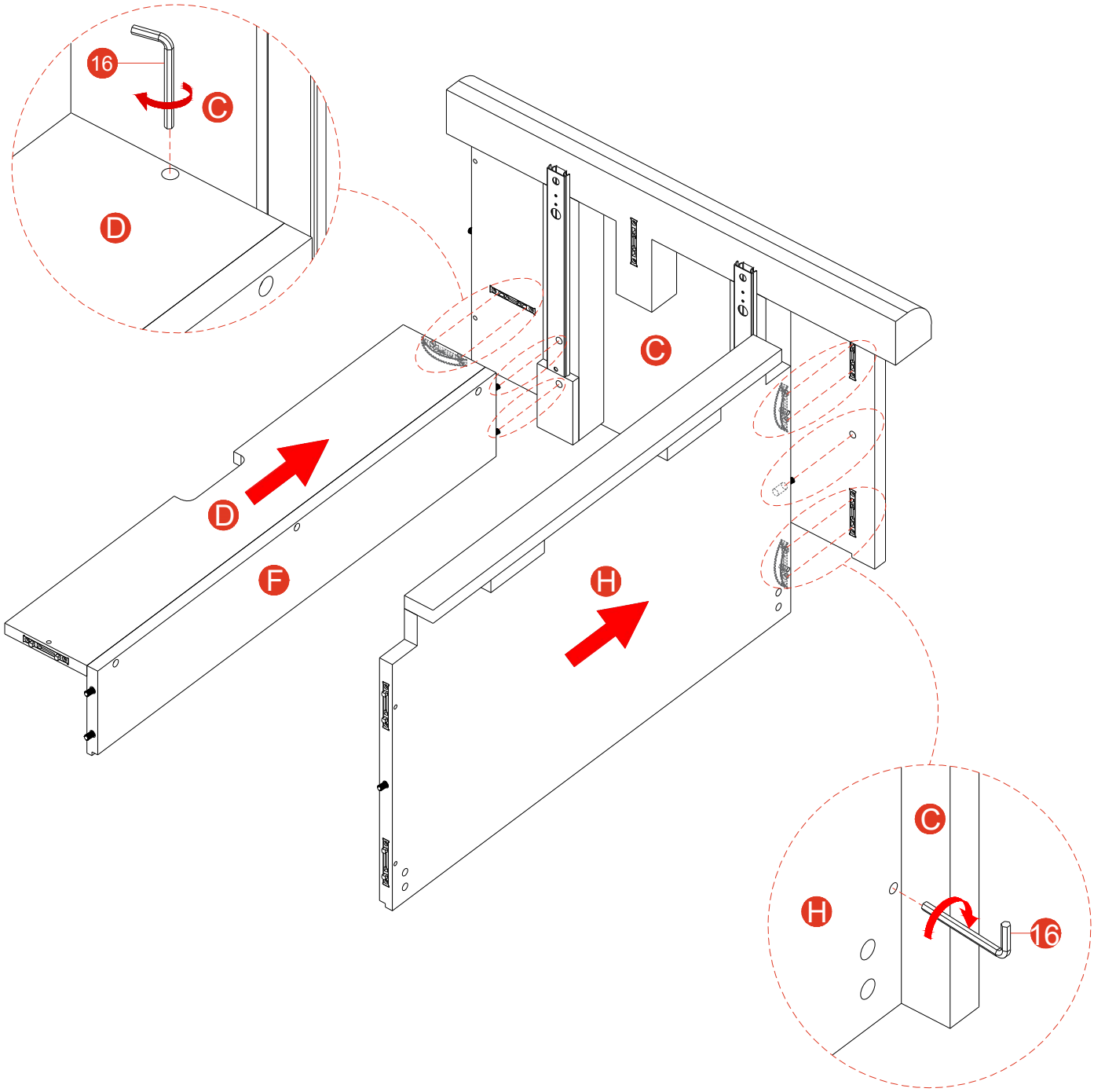

Step 3

Insert part (G) to part (C), make sure all hole aligned and tight them with allen key (16).

16	x 1	M4

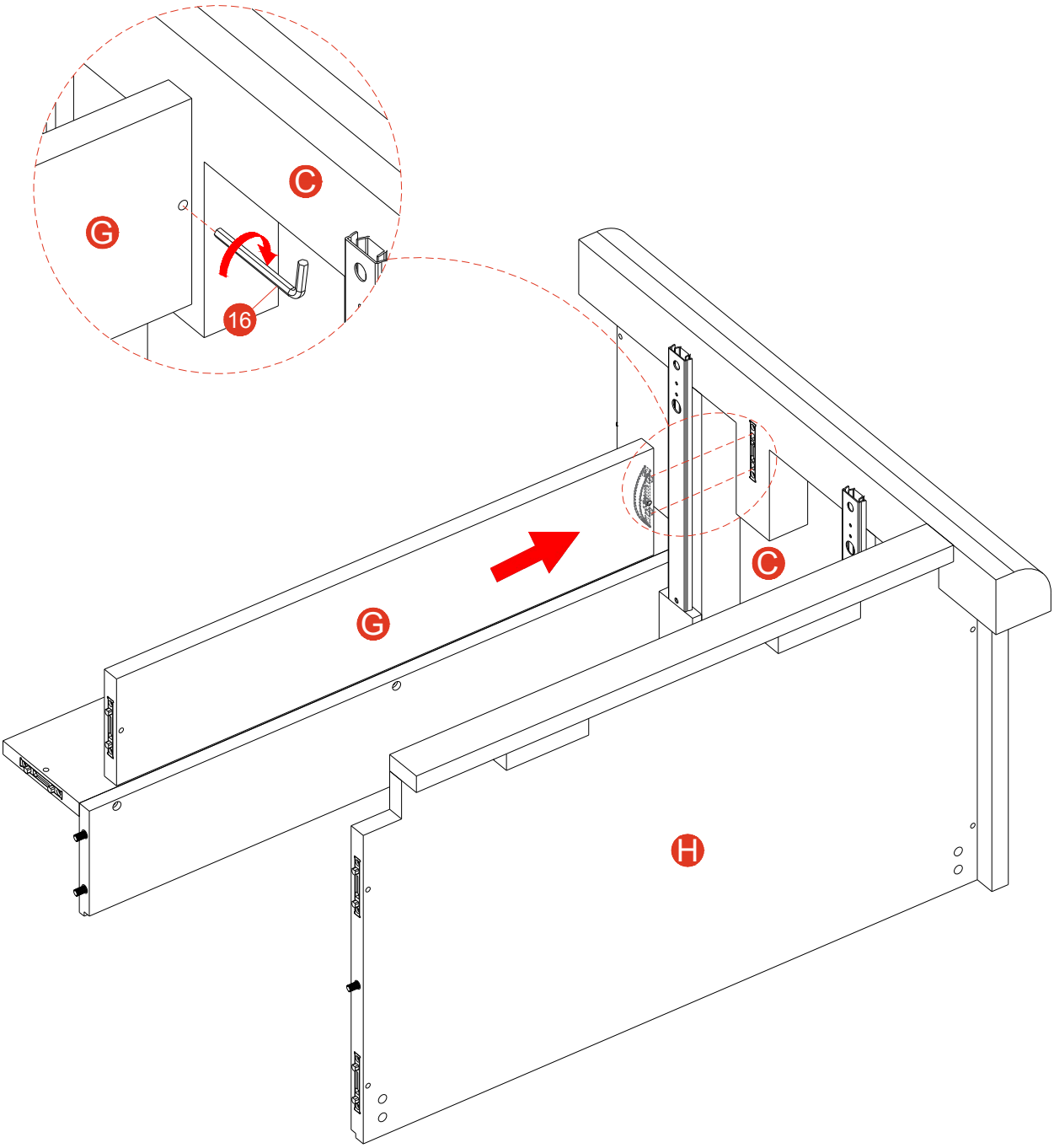

Step 4

Insert part (C&D&H&G) to part (B), make sure all hole aligned and tight them with allen key (16).

16	x 1	M4

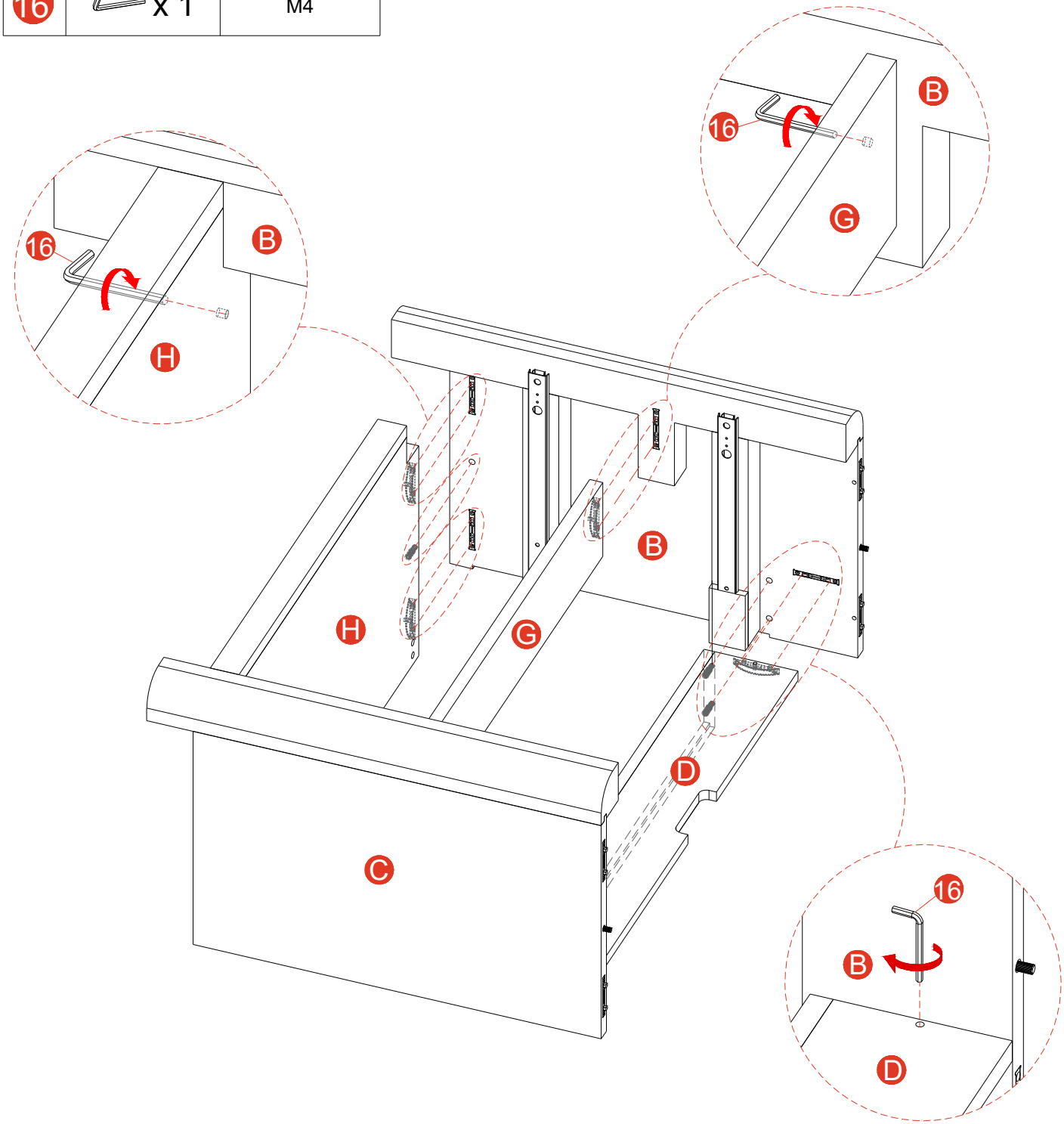

Step 5

Install part (J) into part (H), align the holes and secure them using the Allen key (16).

1	x 4	1/4*35mm
16	x 1	M4

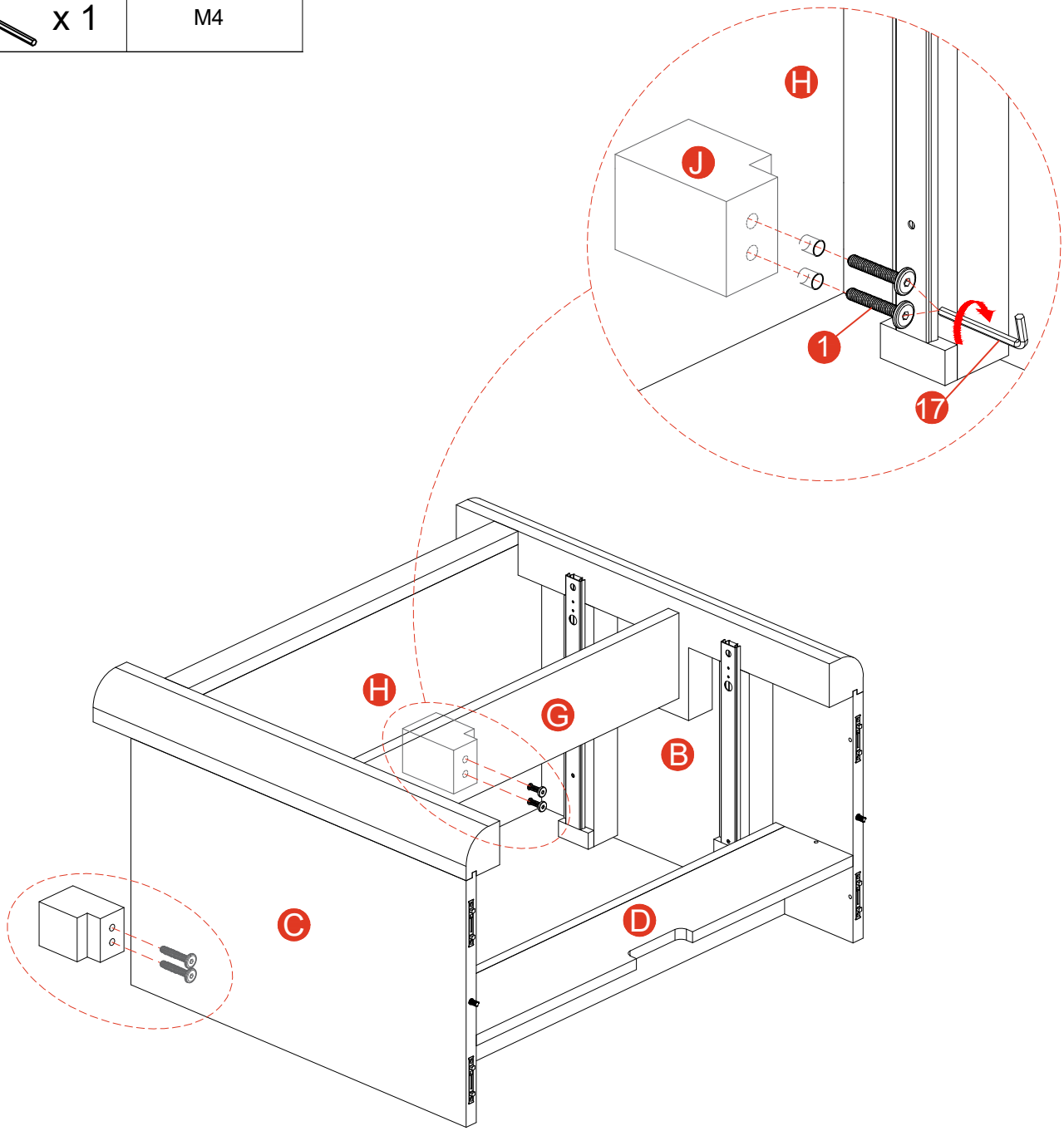

Step 6

1.Install part (I), align the holes with screw (2), and tighten screw (2) using screwdriver (17).
2.Install part (E), align the holes with screw (4), and tighten screw (4) using screwdriver (17).

2	x 14	4x15mm
4	x 4	4x25mm
16	x 1	Screwdriver

Step 1

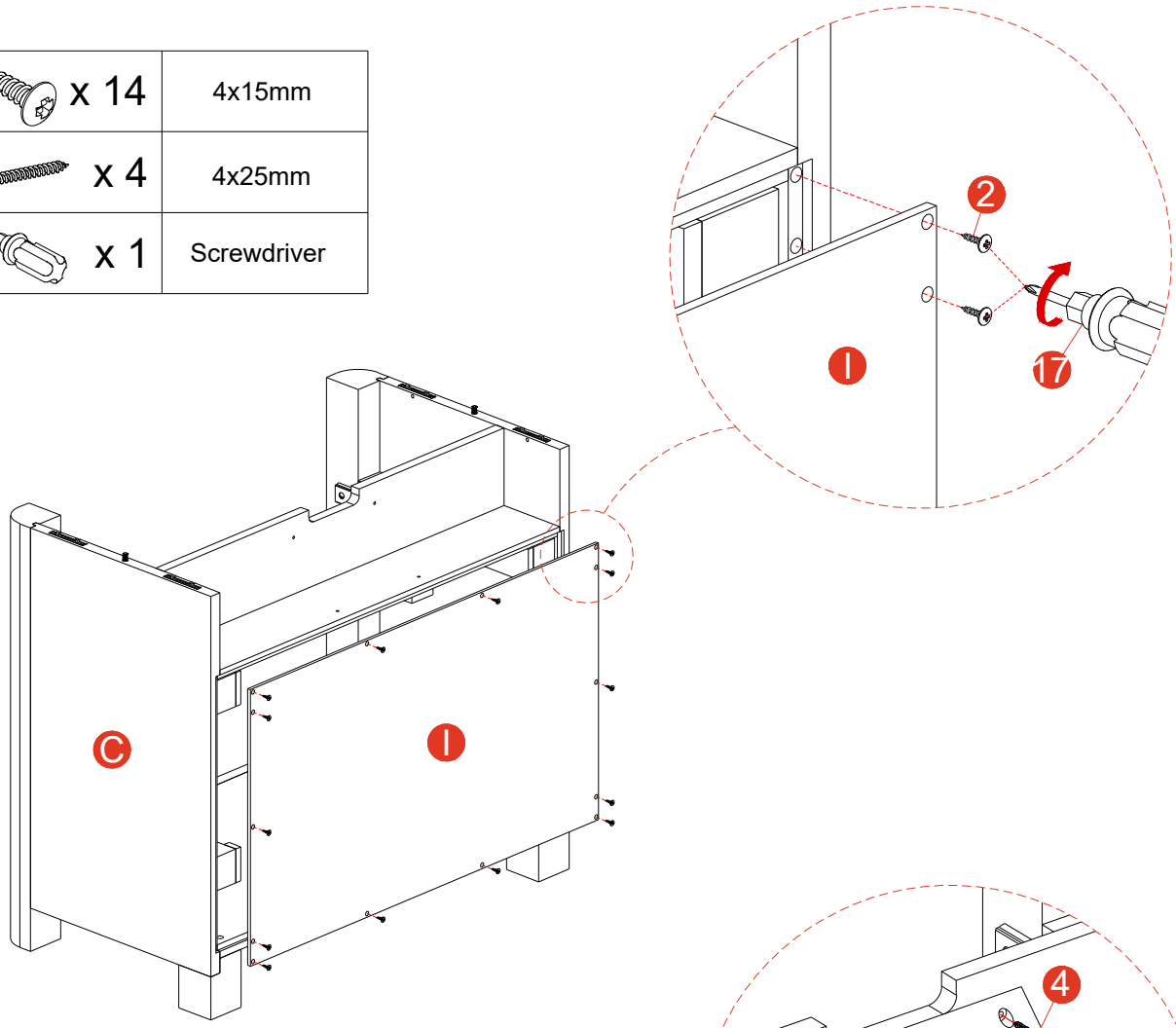

Step 2

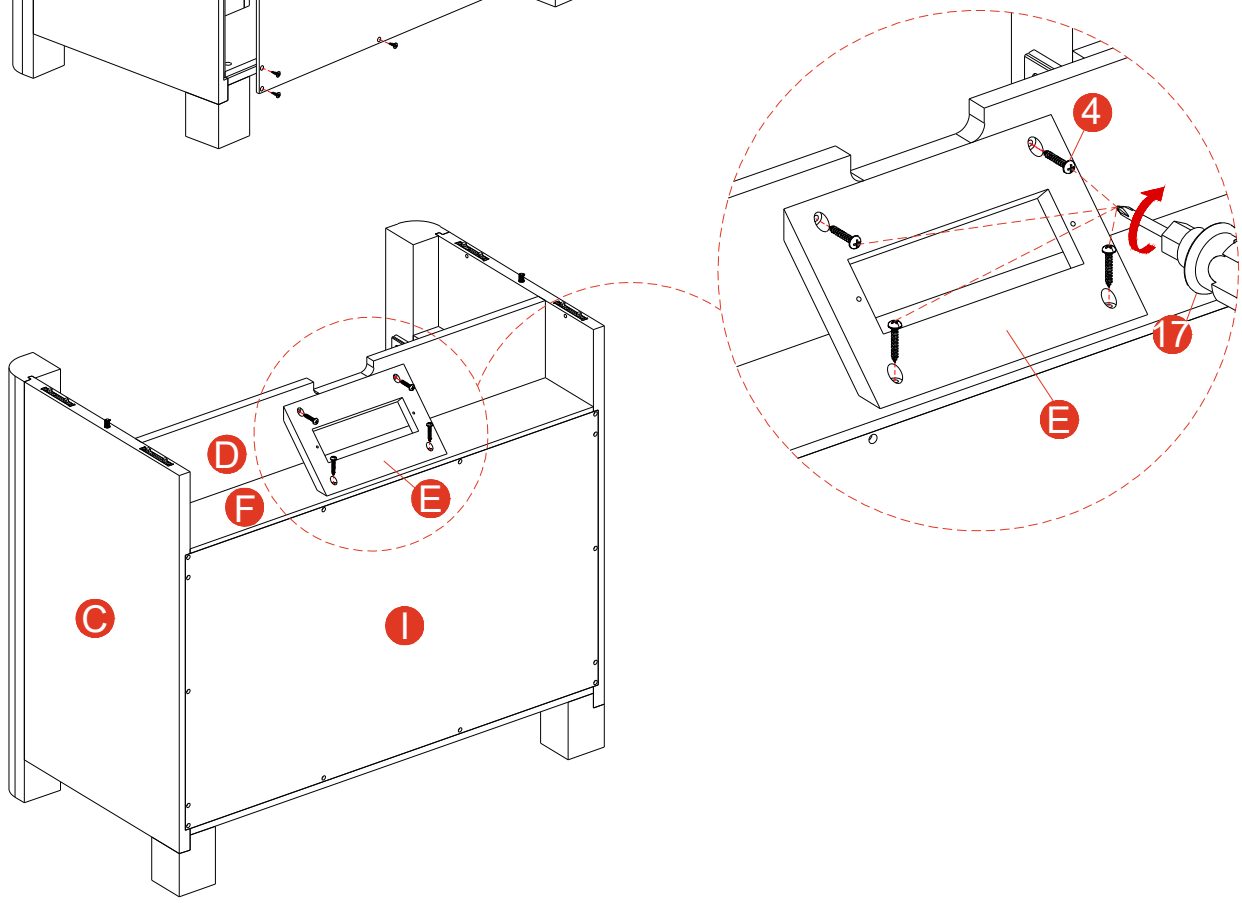

Step 7

Insert part (A) into the pre-assembled part from Step 5, align all holes, and tighten with Allen key (16).

16	x 1	M4

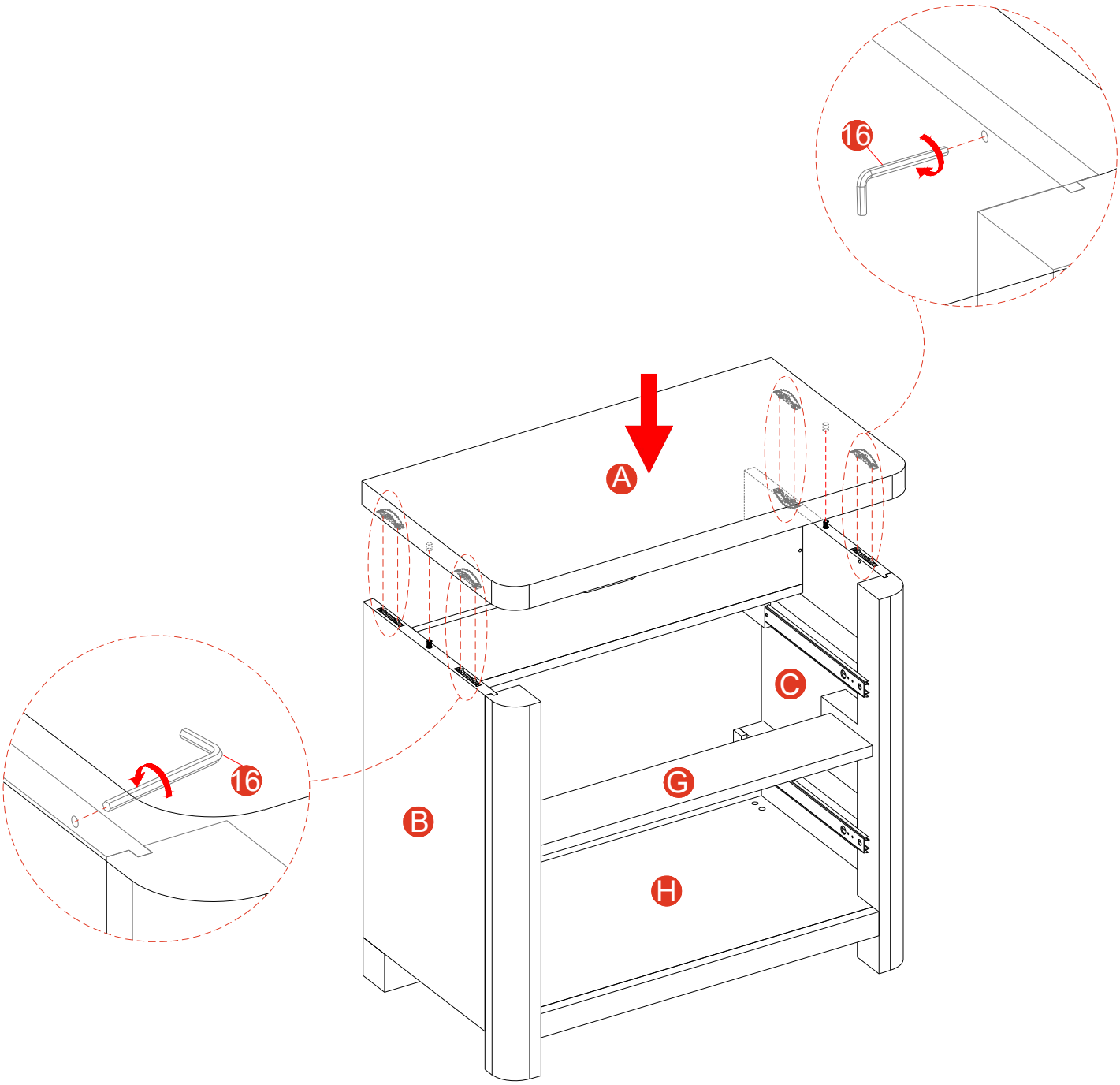

Step 8

Connect part (18) to part E with screw (5), tight screw with screwdriver (17).

5	x 2	3.5*15mm
17	x 1	Screwdriver
18	x 1	Socket

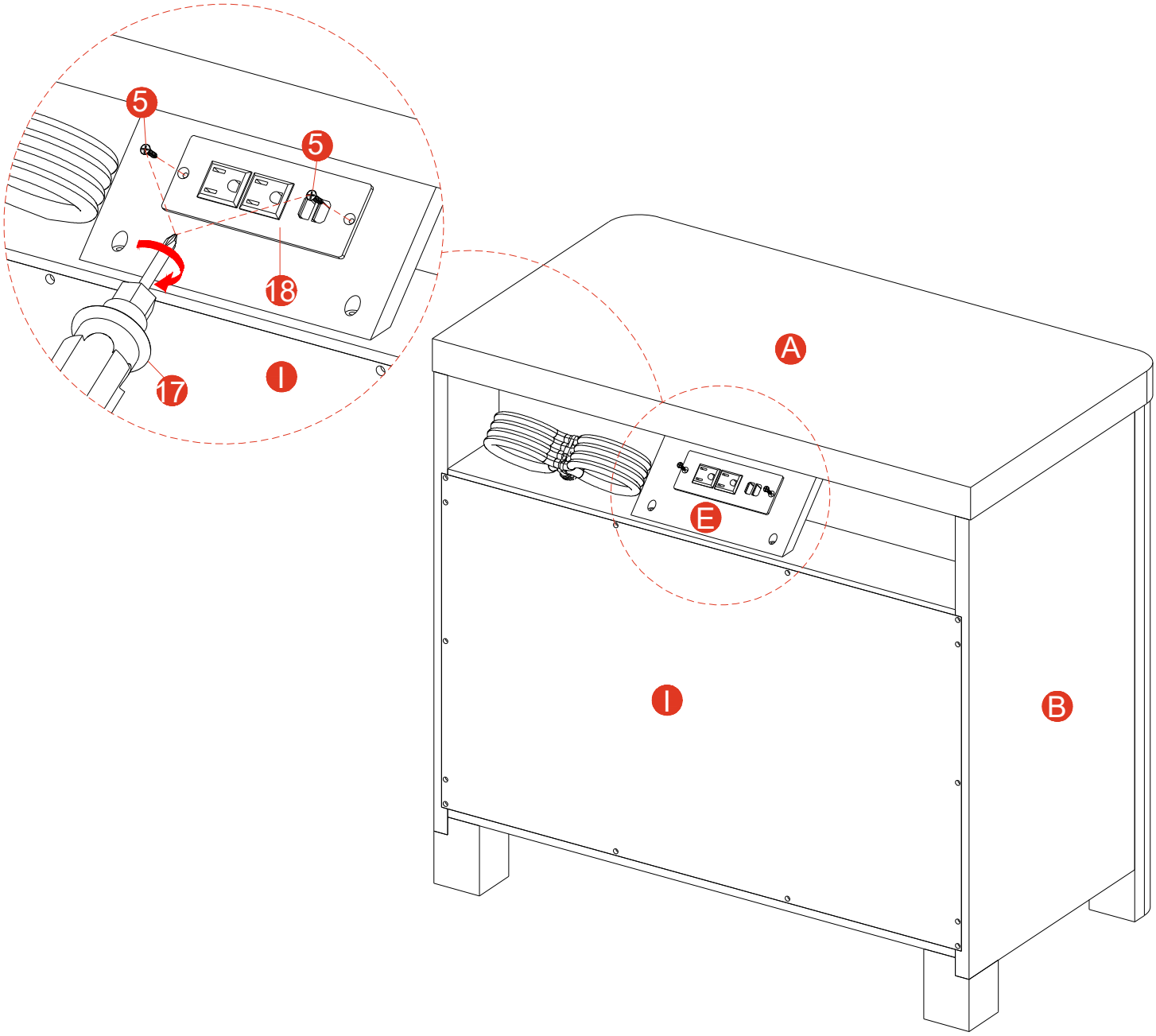

Step 9

Connect part (M&L) to part (K) with screw (6), tight it with screwdriver (17), slide part (O) to part (M&L), make sure it also in the groove of part (K).

6	x 6	4*25mm
17	x 1	Screwdriver

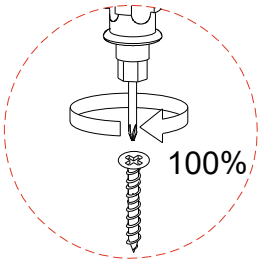

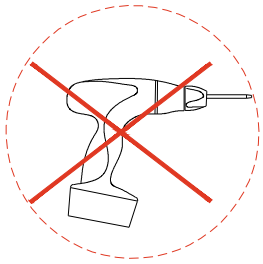

Step 1

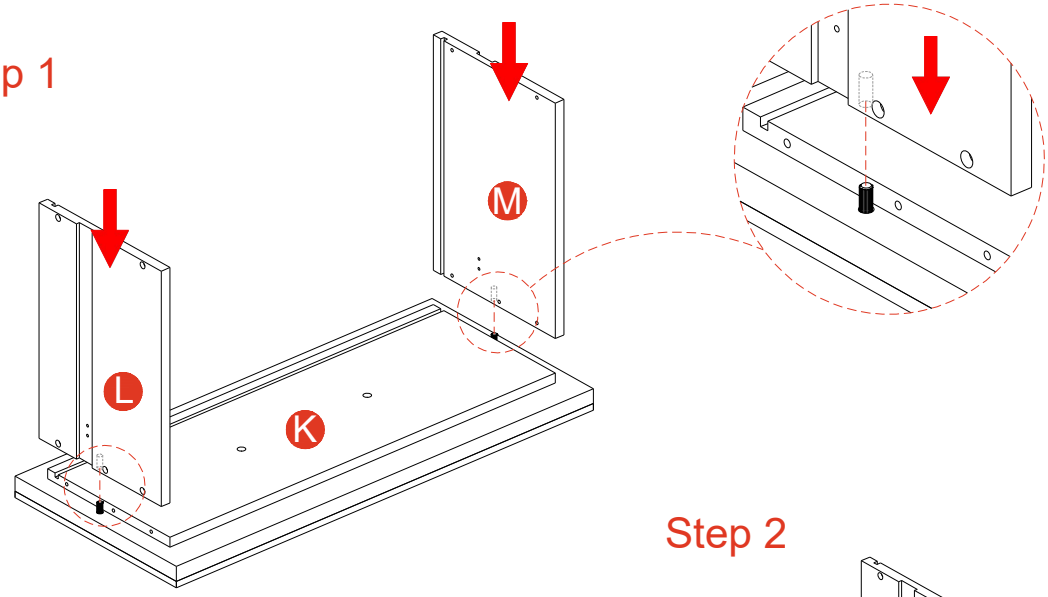

Step 2

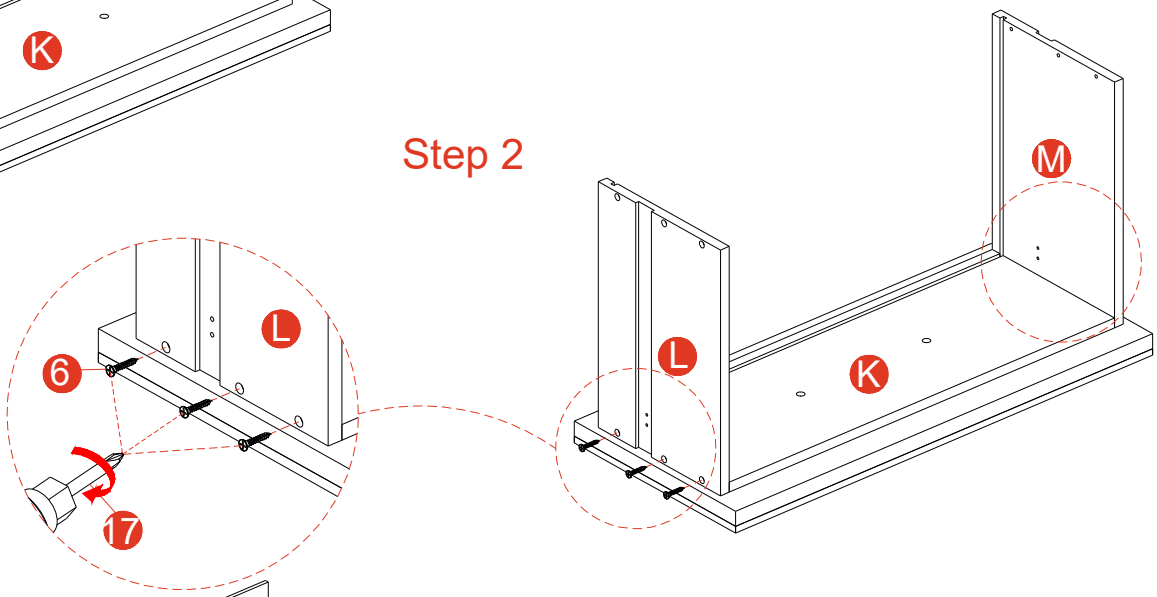

Step 3

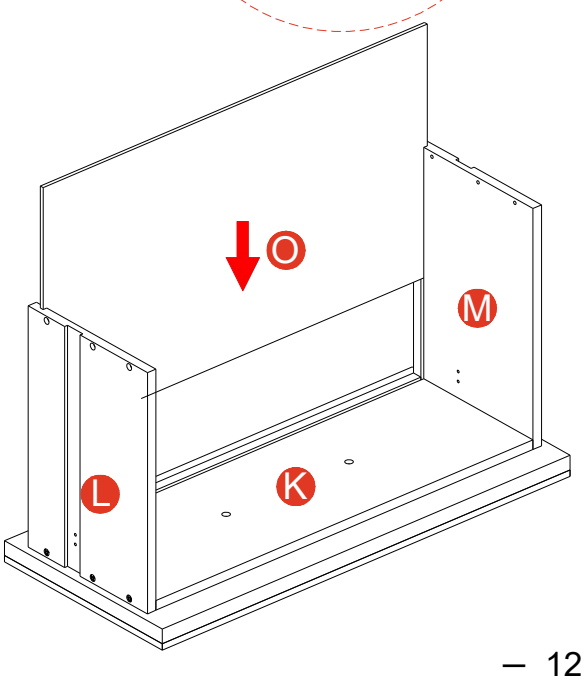

Step 10

Connect part (M&L) to part (N) with screw (6), tight it with screwdriver (17), Connect part (8) to part (K) with small bolt (8), tight bolt with screwdriver (17).

6	x 6	4*25mm
7	x 2	Ø5/32"*30mm
8	x 1	Handle
17	x 1	Screwdriver

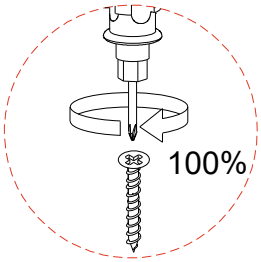

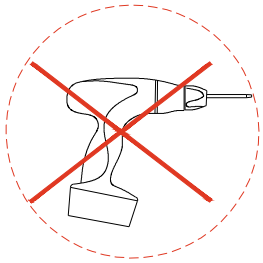

Step 1

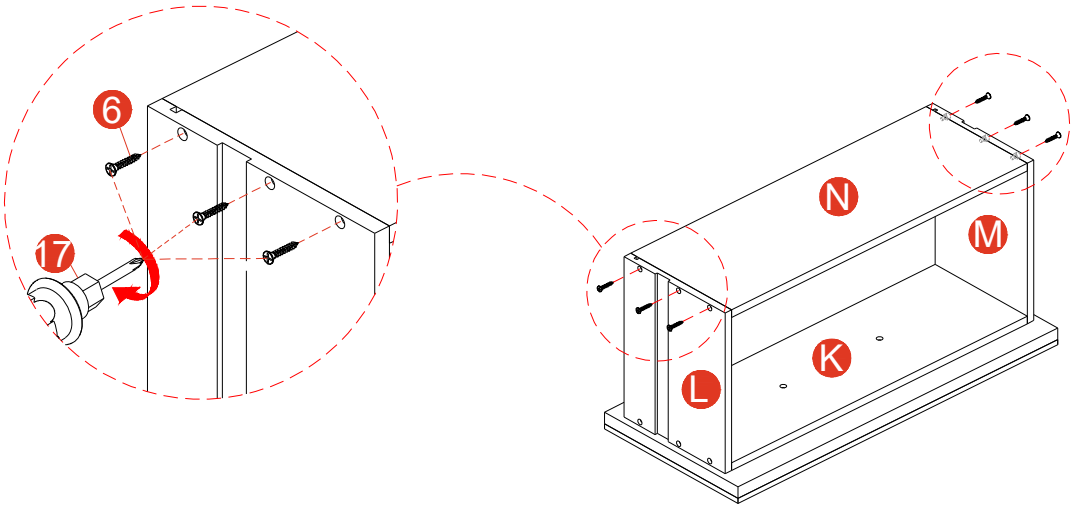

Step 2

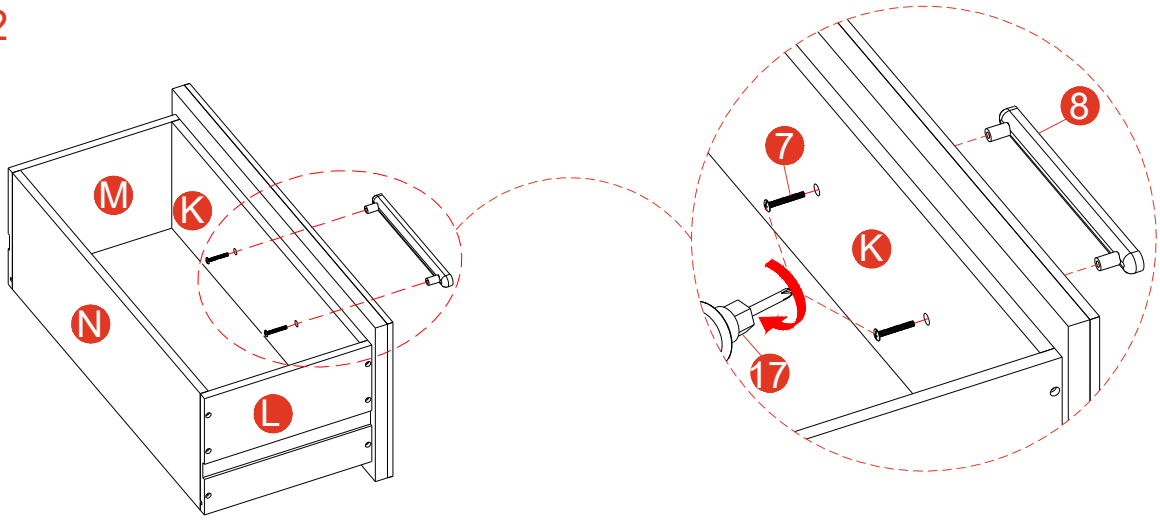

Step 11

Connect part (P&Q) to part (K) with screw (6), tight it with screwdriver (17), slide part (R) to part (P&Q), make sure it also in the groove of part (K).

6	x 6	4x25mm
17	x 1	Screwdriver

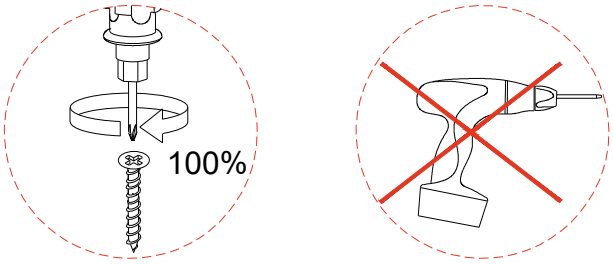

Step 1

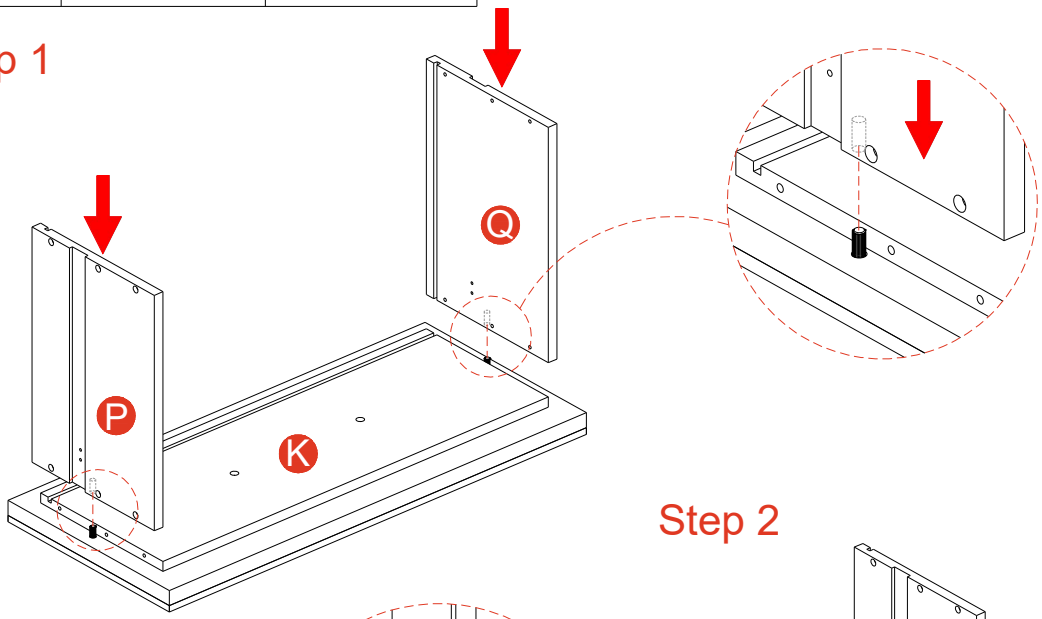

Step 2

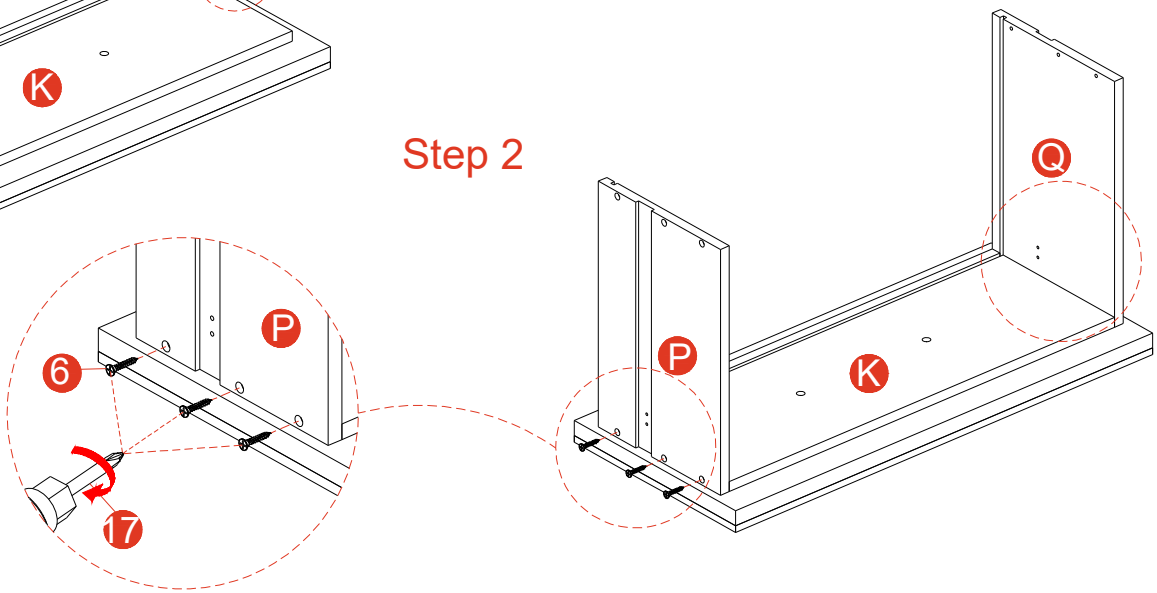

Step 3

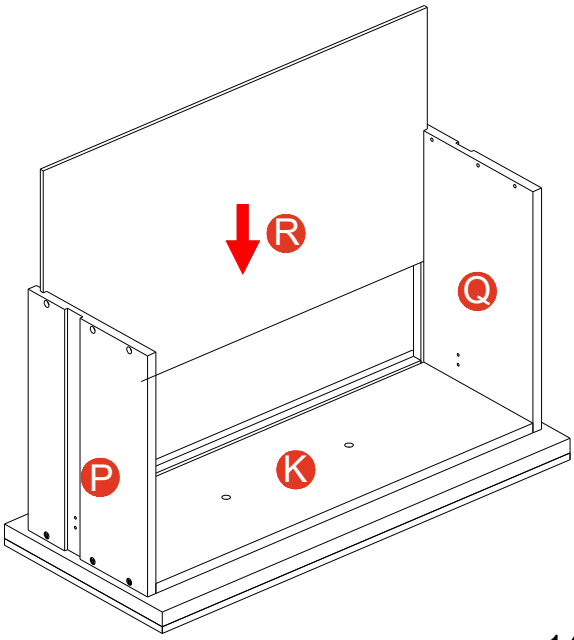

Step 12

Connect part (Q&P) to part (N) with screw (6), tight it with screwdriver (17), Connect part (8) to part (K) with small bolt (8), tight bolt with screwdriver (17).

6	x 6	4*25mm
7	x 2	Ø5/32"*30mm
8	x 1	Handle
17	x 1	Screwdriver

Step 1

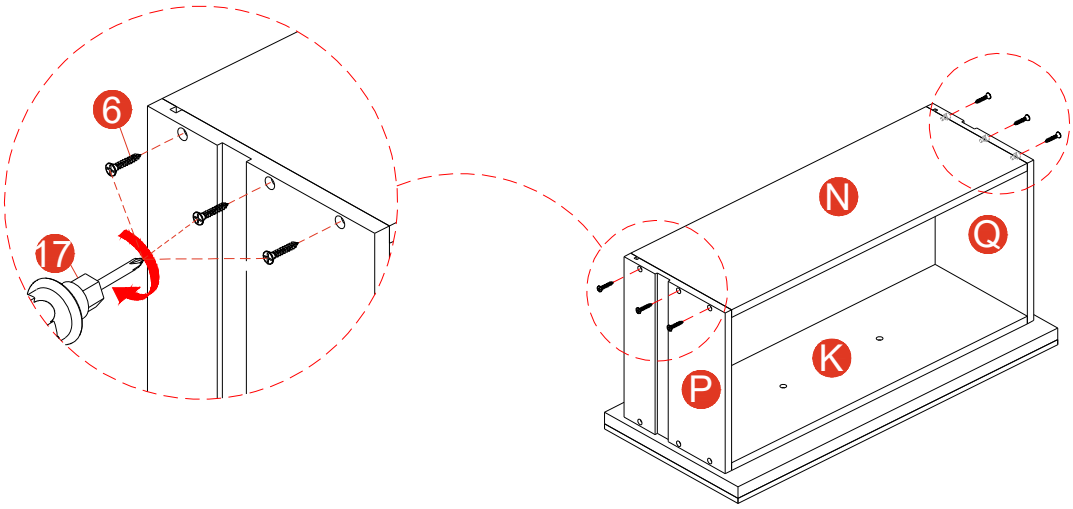

Step 2

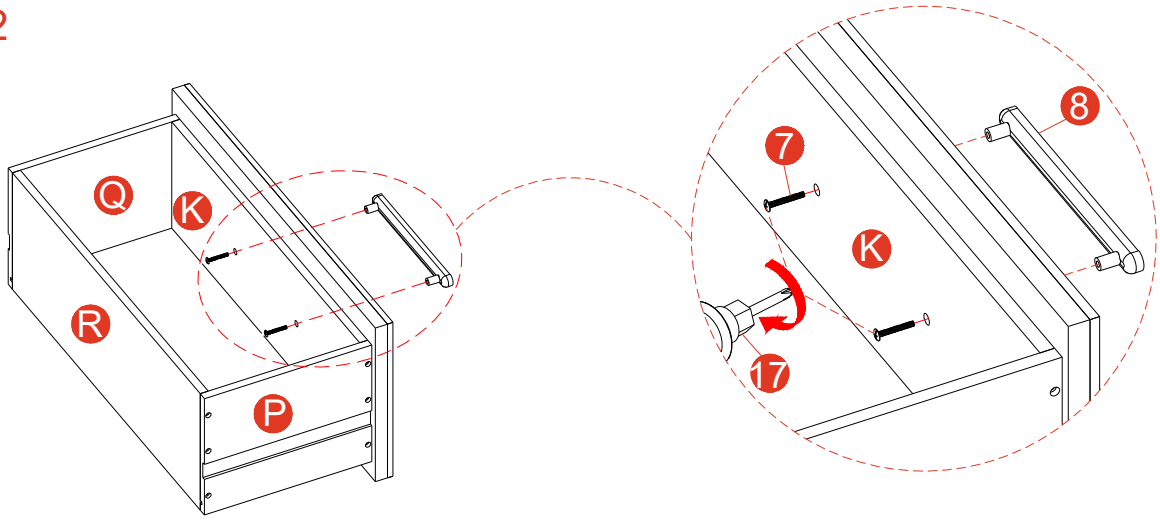

Step 13

1.Slide the steel ball slide rail into the groove in part (L&M).
2.Use screw (9) flat washer (10) to attach he steel ball slide rail to the drawer，tighten screws with screwdriver (17).

9	x 2	4*12mm
10	x 2	Flat washer
17	x 1	Screwdriver

Attention：When installing the drawer, slide the steel ball slide rail of side panel to the most front as picture show.

Step 1

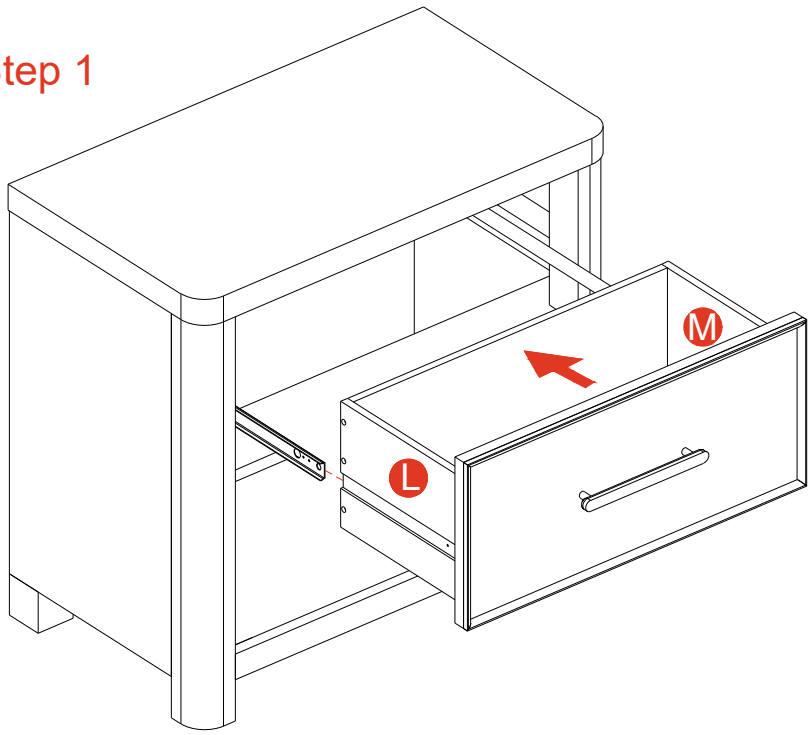

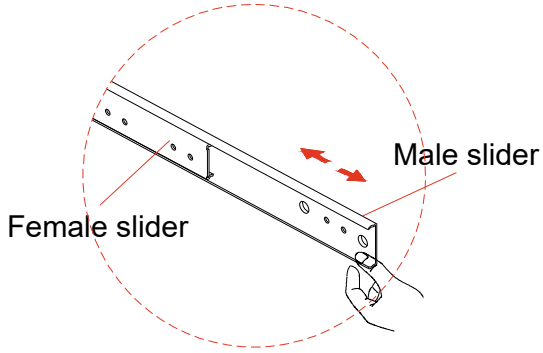

Step 2

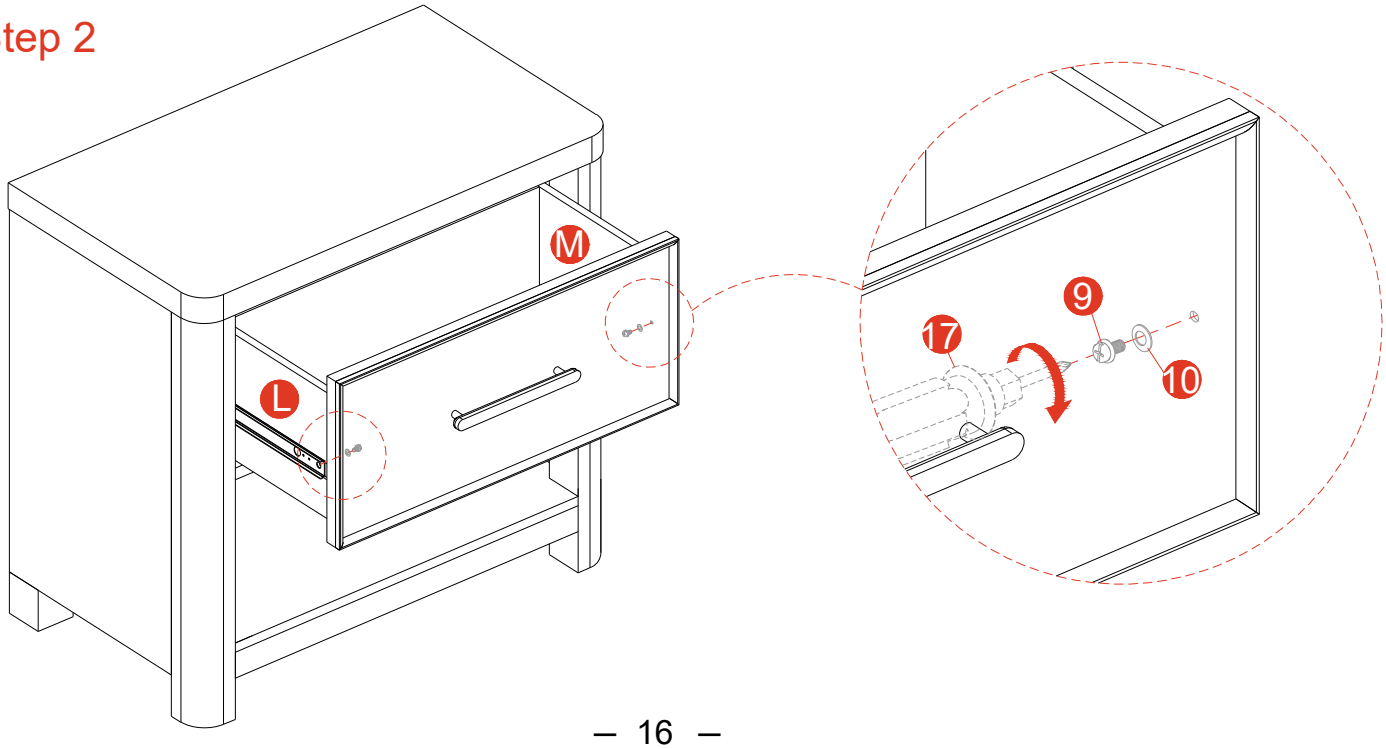

Step 14

1.Slide the steel ball slide rail into the groove in part (P&Q).
2.Use screw (9) flat washer (10) to attach he steel ball slide rail to the drawer，tighten screws with screwdriver (17).

9	x 2	4*12mm
10	x 2	Flat washer
17	x 1	Screwdriver

Attention：When installing the drawer, slide the steel ball slide rail of side panel to the most front as picture show.

Step 1

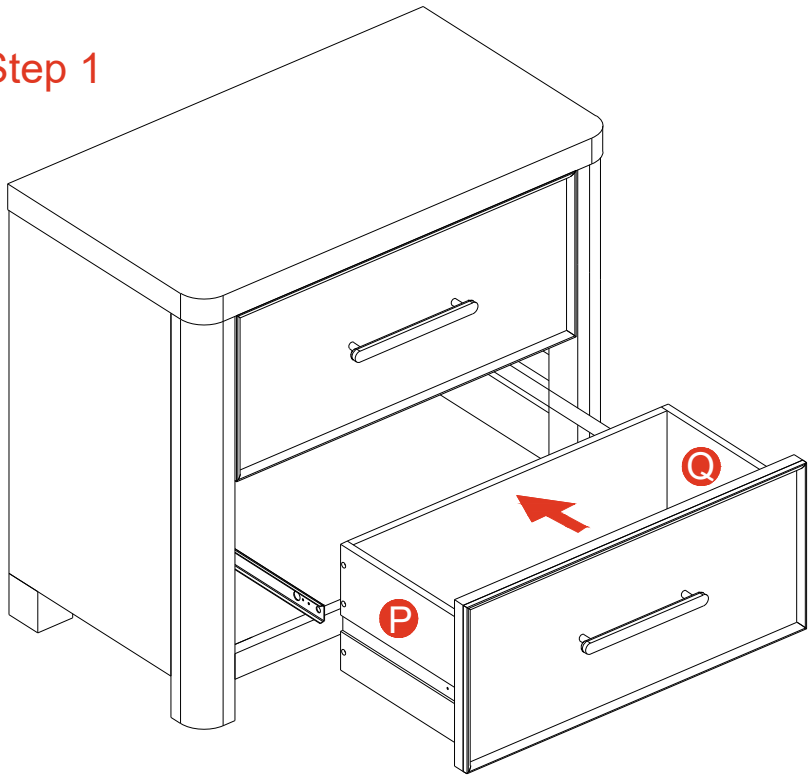

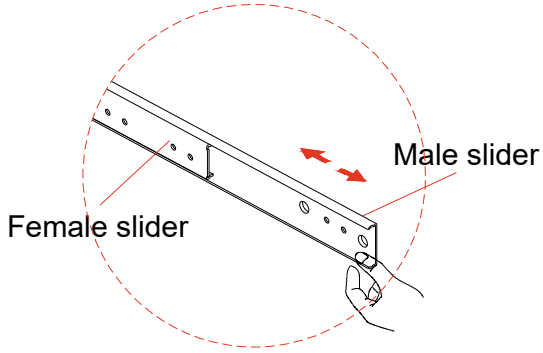

Step 2

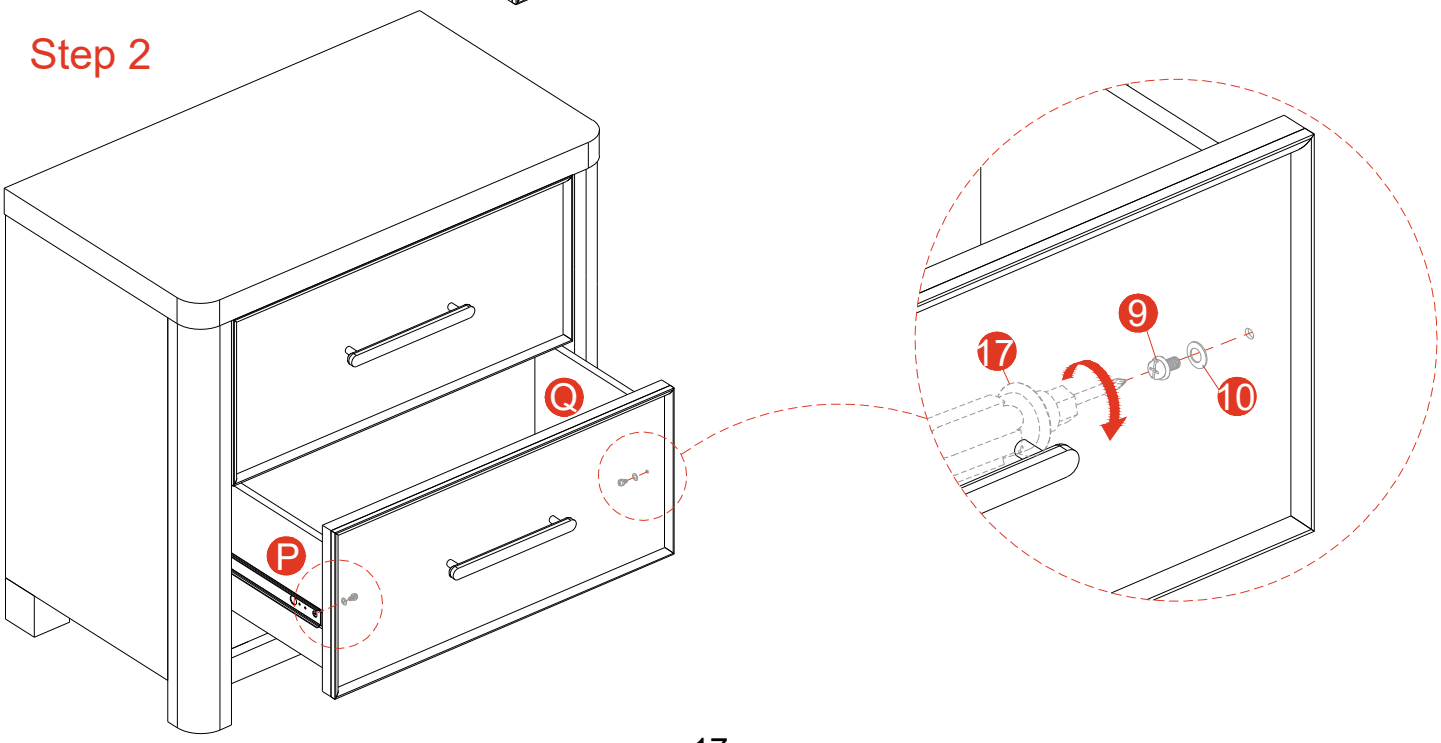

Step 15

Connect part (15) to part (A) with screw (15), tight it with screwdriver (17).

11		x 1	4*15mm
15		x 1	L-bracket
17		x 1	Screwdriver

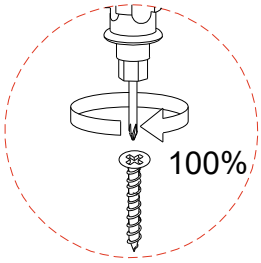

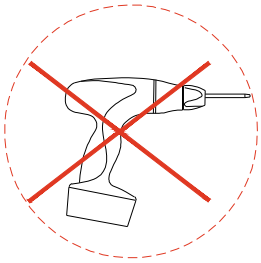

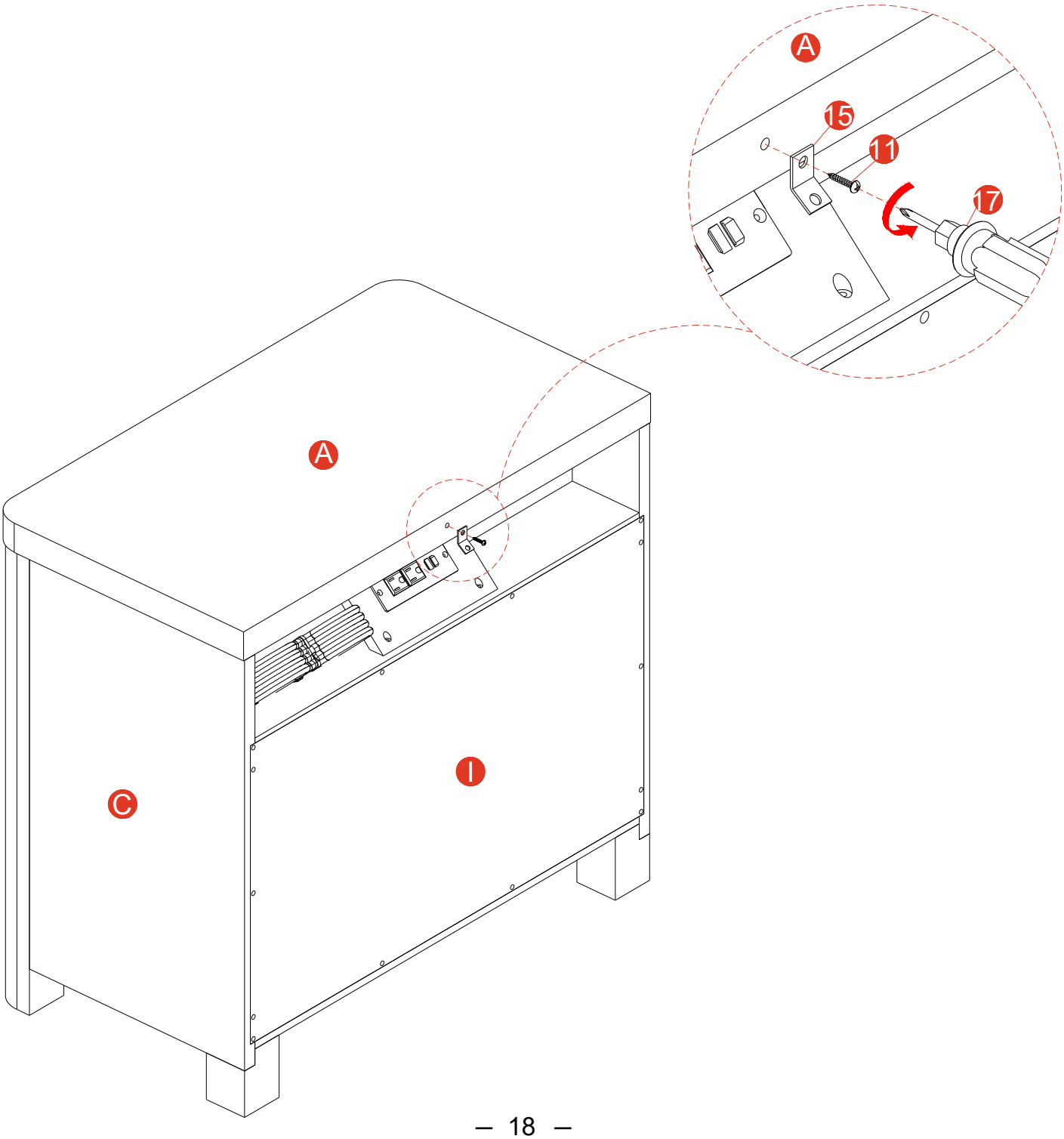

Step 16

Install Anti-tip device (15) to the wall in this step.

12	x 1	4x35mm
15	x 1	L-bracket
13	x 1	Anchor
17	x 1	Screwdriver

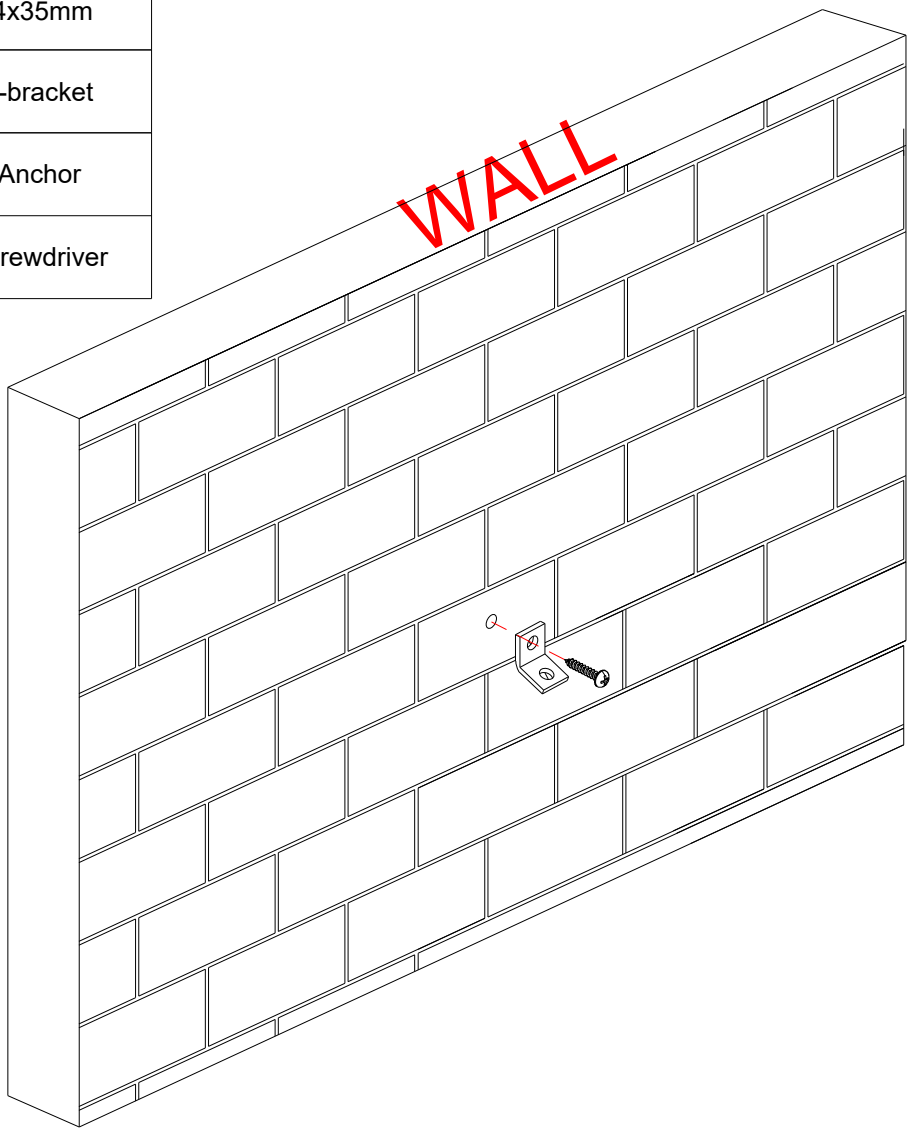

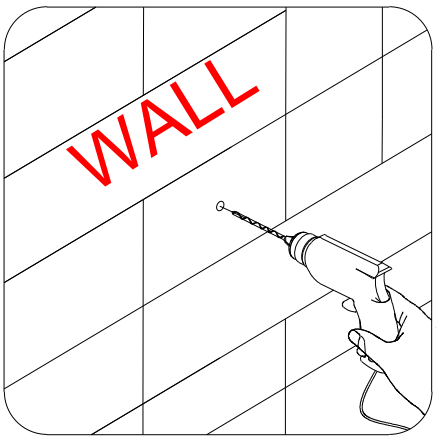

1.Drill a hole in the wall with an electric drill.

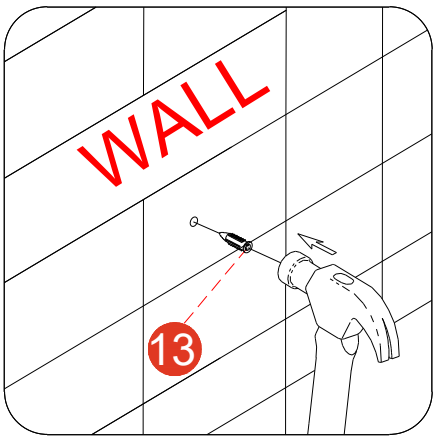

2.Tap the plastic wall anchor into the hole with a hammer.

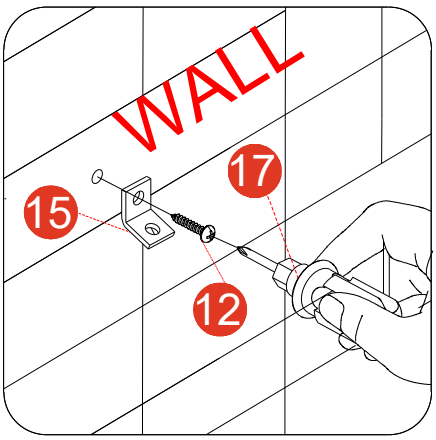

3.Secure the Anti-tip device (15) to the wall with screws (12)

Step 17

1.Let the Tie (14) pass through the both part (15) and pull tightly.

14	x 1	Tie

⚠WARNING

Children have died from furniture tipover.To reduce the risk of furniture tipover:

-ALWAYS install anti-tip device provided.
-NEVER put a TV on this product.
-NEVER allow children to stand, climb or hang on any drawers, doors, or shelves.
-NEVER open more than one drawer at a time.
-Place heaviest items in the lowest drawers.
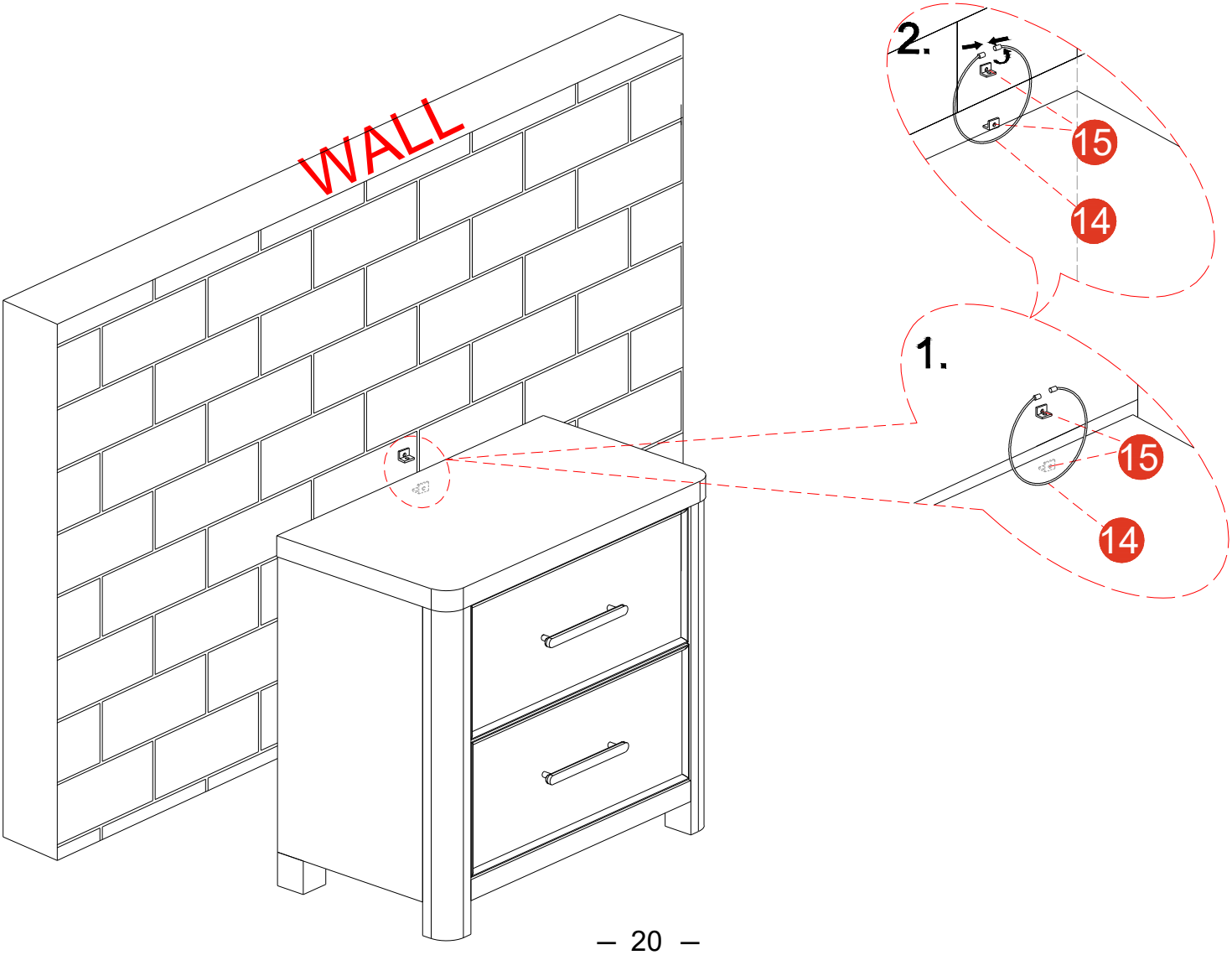
This is a permanent label. Do not remove!