SKU:MZ04BK02 MZ04WH02 MZ04BG02

Metal Cabinet-Installation Manual



SKU: MZ04BK02 MZ04WH02 MZ04BG02

Metal Cabinet-Installation Manual

Important Installation Notes-Please Read First

1.Safety First:

Wear the gloves provided in the carton box to avoid any injuries, Work on a clean, flat, and stable surface to avoid scratching the cabinet or causing instability during assembly.

2.Adult Supervision Required:

This product must be assembled by adults only. Keep small parts (screws, washers, etc.)away from children and pets to prevent choking hazards.

3.Parts Checklist

Before beginning, open the carton box and lay out every part against the parts list to verify that all parts needed are included in your package. If any parts are missing, damaged, or defective, contact our customer service immediately by:

sales-order-service@hotmail.com

4.Tools You'll Need

We recommend using an electric screwdriver for cabinet assembly if you have one.

Thank you for choosing our metal storage cabinets. We' re honored it now stands in your space. May its strong, quiet shelves turn everyday clutter into calm order, giving you more room to breathe, create and enjoy. Here’ s to neater days and simpler moments-every time you open the door.

The strips on the doors feature magnetic installation design, What you see when you open the package is only their factory-default layout. You can rearrange them into any of following 5 different styles to match your personal preference-simply lift, move, and let the magnets snap them into place.













A*1

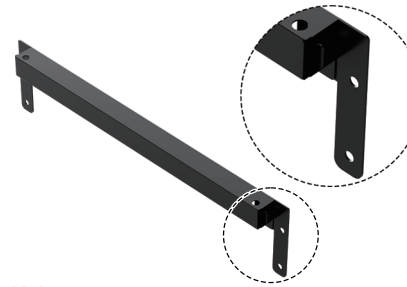

M*1

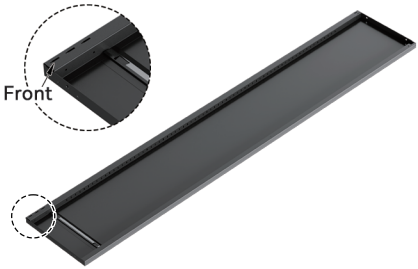

C*1

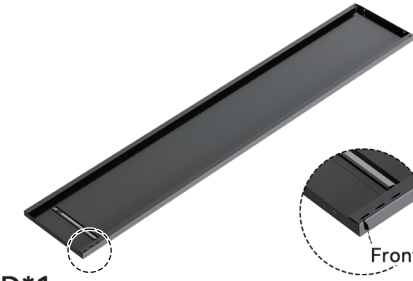

D*1

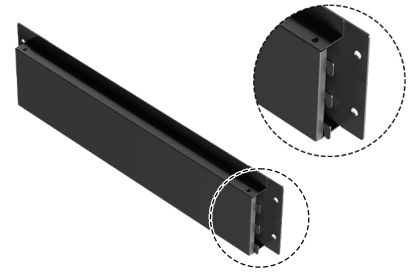

E*1

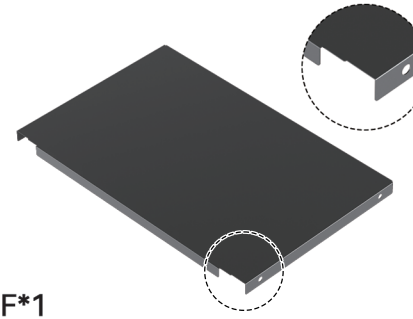

F*1

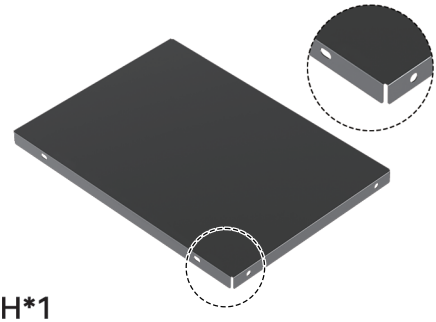

H*1

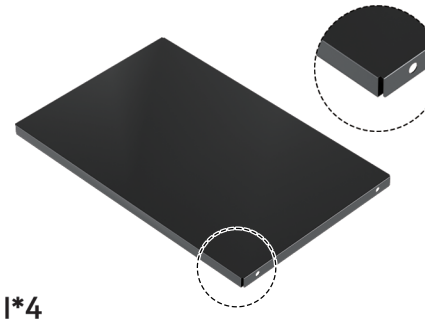

I*4



J*1



K1*1



K2*1



G*4



N*35

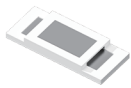

K3*4



O*16



V*16



S*1

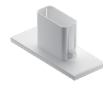

Q*2



U*2



SS*1



W*2



T*1


H
C
M
A
I
D
I
J
I
I
F
E
G
G

1

N*3 

Take out Side Panel C and Back Panel A.

Lift Back Panels A, then slot its edges into the grooves on Side Panels C.

Secure them with screws(N*3).

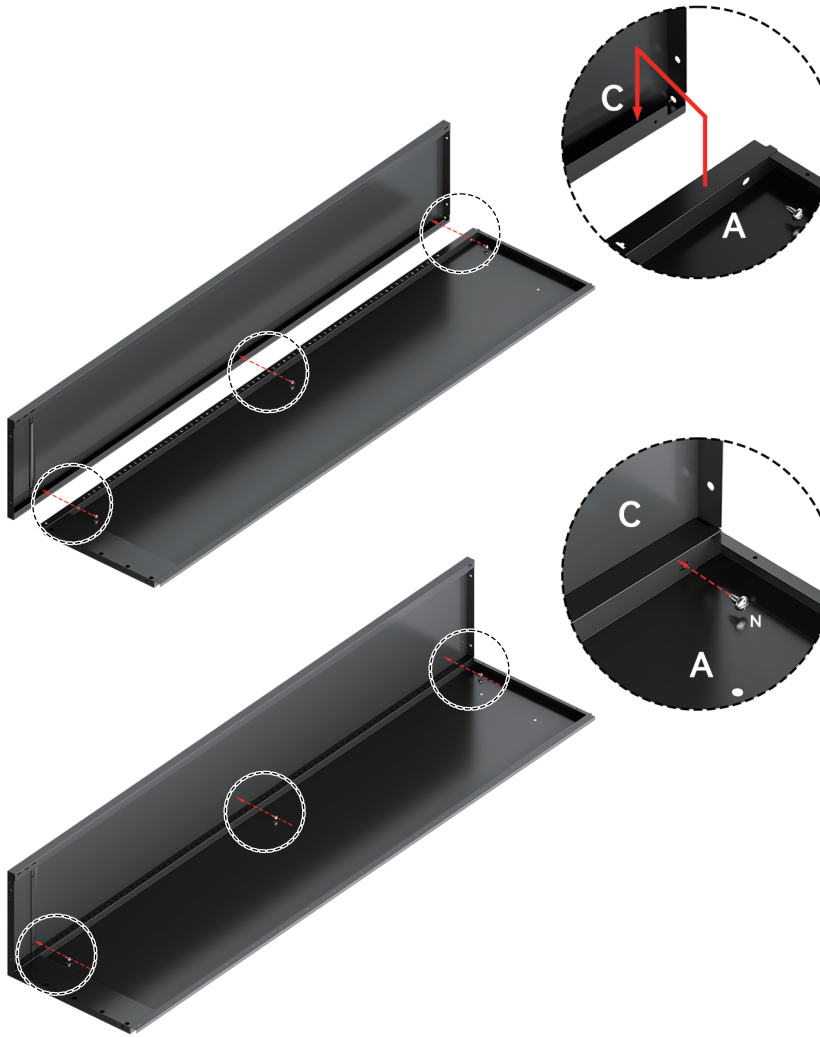

2

N*3 

Place Side Panel D on the right.

Lift Back Panels A,then slot its edges into the grooves on Side Panels D.

Secure them with screws(N*3).

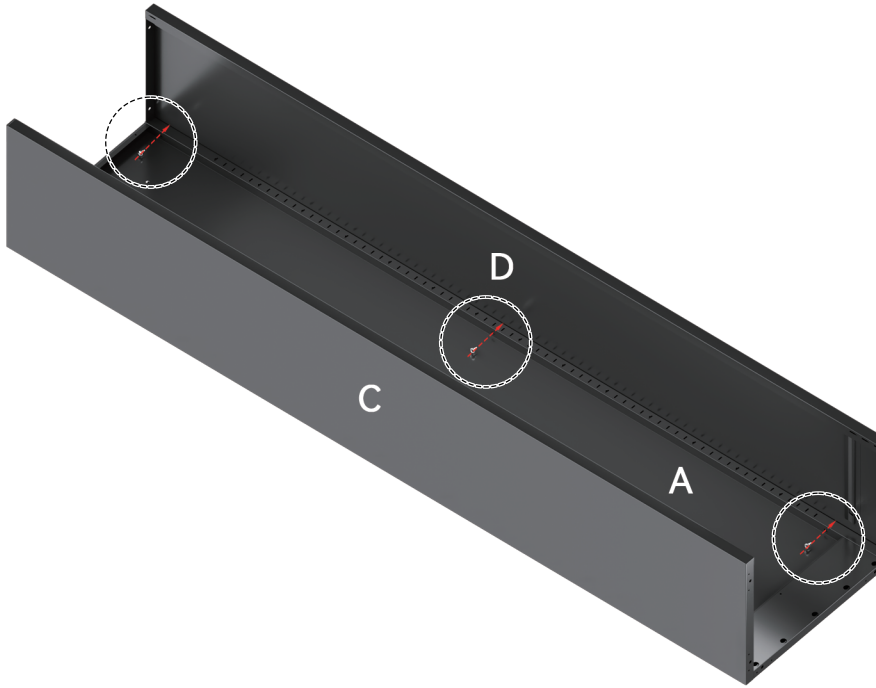

3

N*4

Install Bottom Panel(E)

Snap the three buckles on Panel E into the matching holes on both Side Panels.

Push down until it clicks into place.

Secure from inside using screws(N*4).

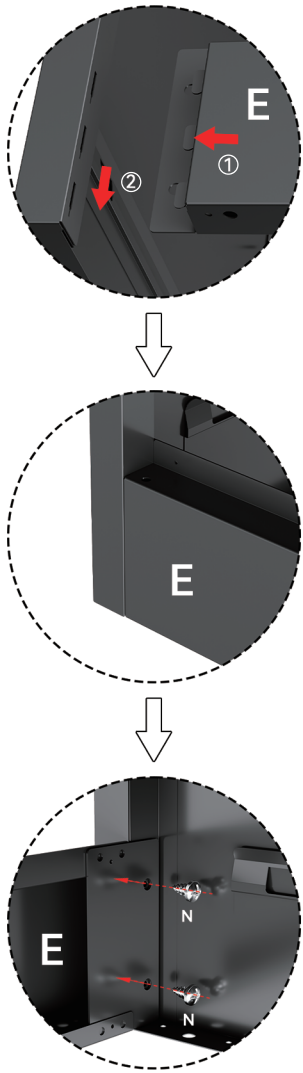

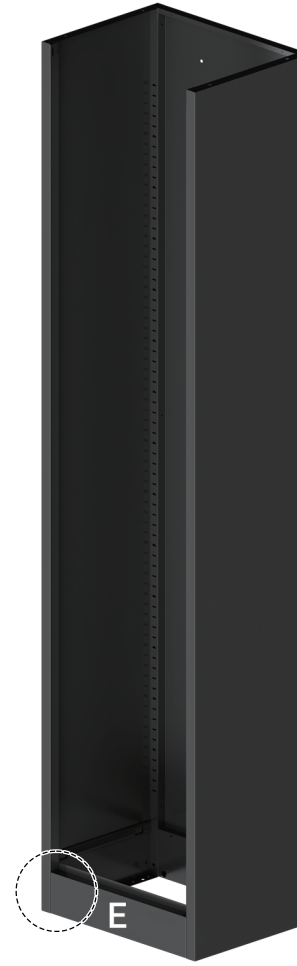

4

N*4 

Install Top Panel (M)

Snap the buckles on Panel M into the Side Panel holes.

Push up until it locks.

Secure from inside using screws (N*4).

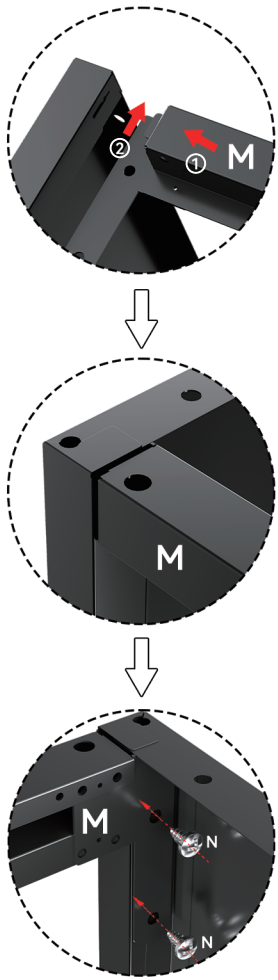



5

N*4

Attach Top Panel (H)

Assemble Top Panel upwards,then fasten
it in place using screws(N*4) through the holes in each corner.

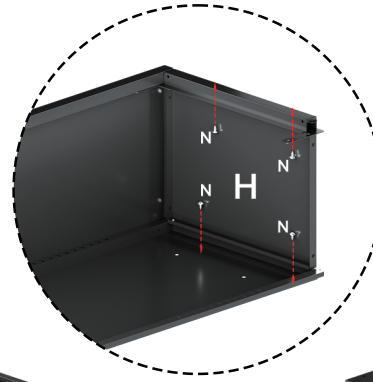

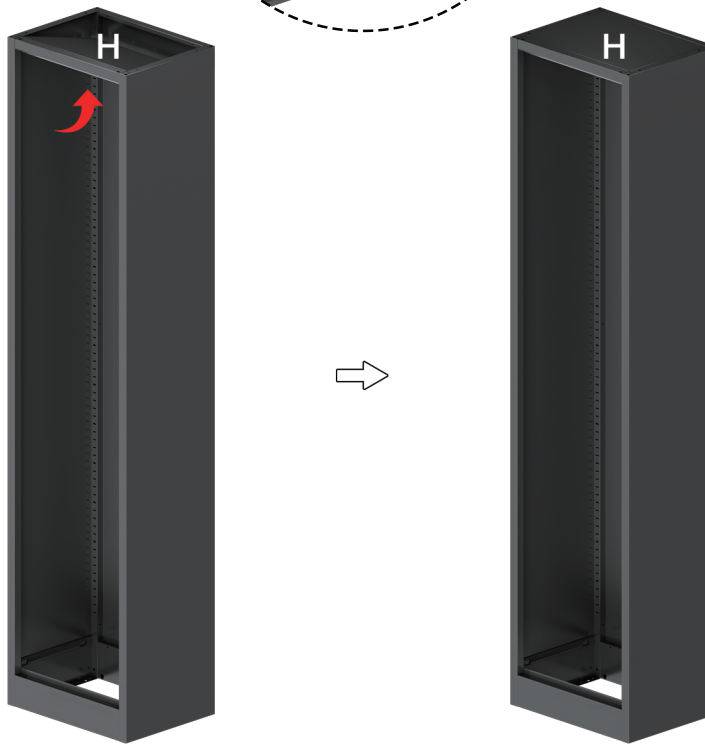

6

N*1 

Install Bottom Shelf(F)

Position Part F inside the cabinet with its notched edge facing forward and secure it using screws (N*1) from the center of the cabinet's bottom.

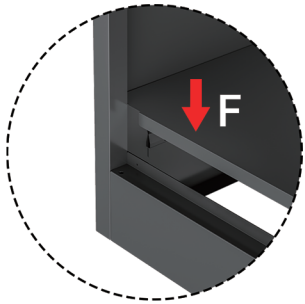

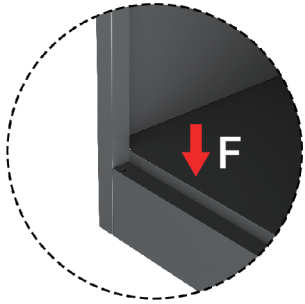



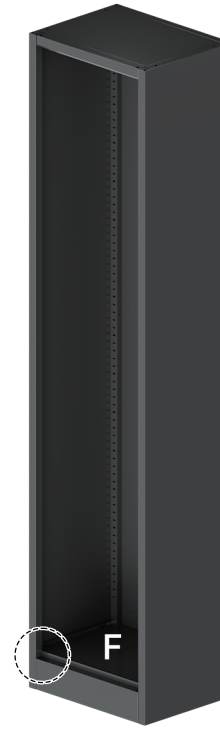

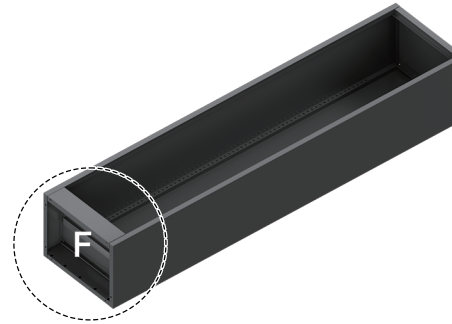

7

N*16

G*4



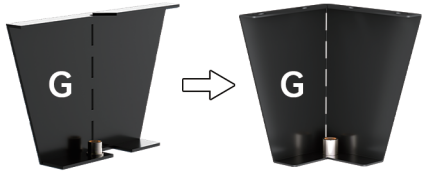

Install Legs(G)

Fold 4 Legs(G*4) into a right angle and attach them to the bottom using screws(N*16).

Last attach the black adjustable pads.

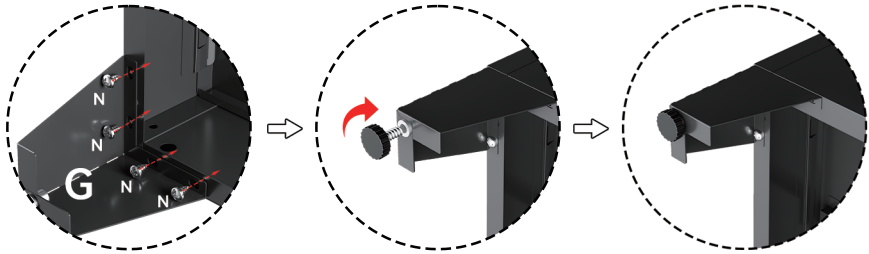

8

O*16
V*16

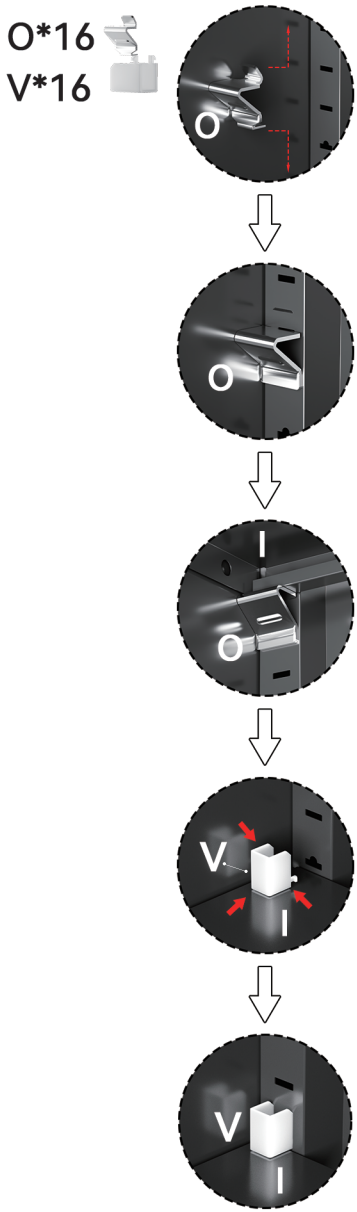

Install Shelves(I)

You can choose where you want to mount the 4 shelves. Just insert metal clips(O*16) into the holes on both side panels as your desire. Then simply put the shelves(I*4) on the clips. (Tilt the shelves at an angle to get it into the cabinet,then lay it flat for easier installation).

Finally install the plastic grid(V*16)at the top of the shelves for stability.



9

K3*4

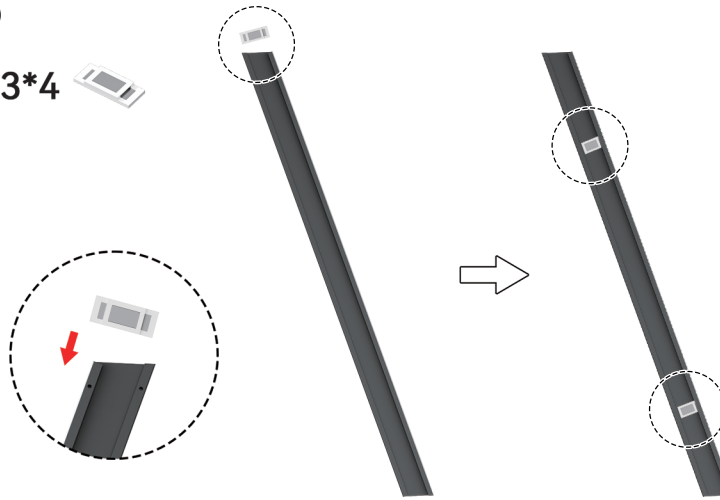

Install Magnetic Strips (K1&K2)

Insert two magnets(K3) into each cross strip(K1*2 and K2*2).

Ensure the magnets are properly seated in suitable middle places.

10

Finally snap the cross strips on the doors. You can arrange them into different styles to match your personal preference.

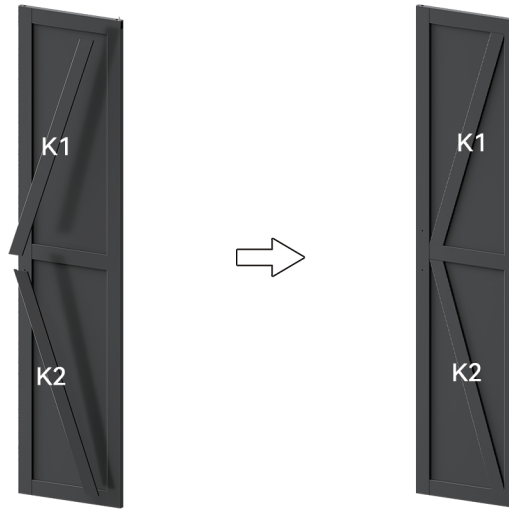

⑪

The door can be configured to open from the left or right.

SS*1 

Place the door panel as illustrated below. The spring hing(SS*1) can be installed in either the upper or lower hole on the right side of Door J. Please mount the spring hing at the top or bottom of the door's right side based on whether you need a left-hand swing or right-hand swing door.

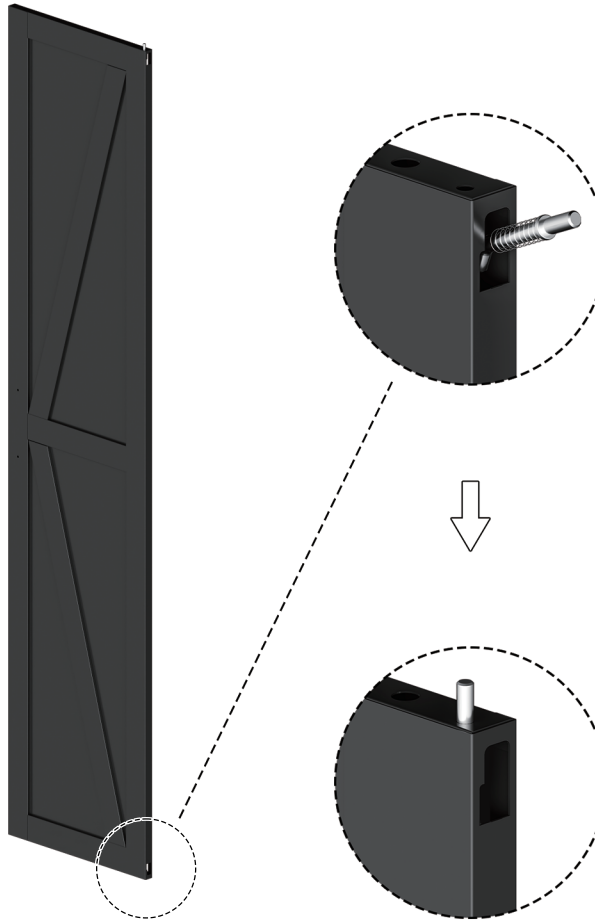

⑫

S*1

Attach Door(J)

Press the upper spring hing so that it can snap into the top frame hole-release and it locks itself in place.

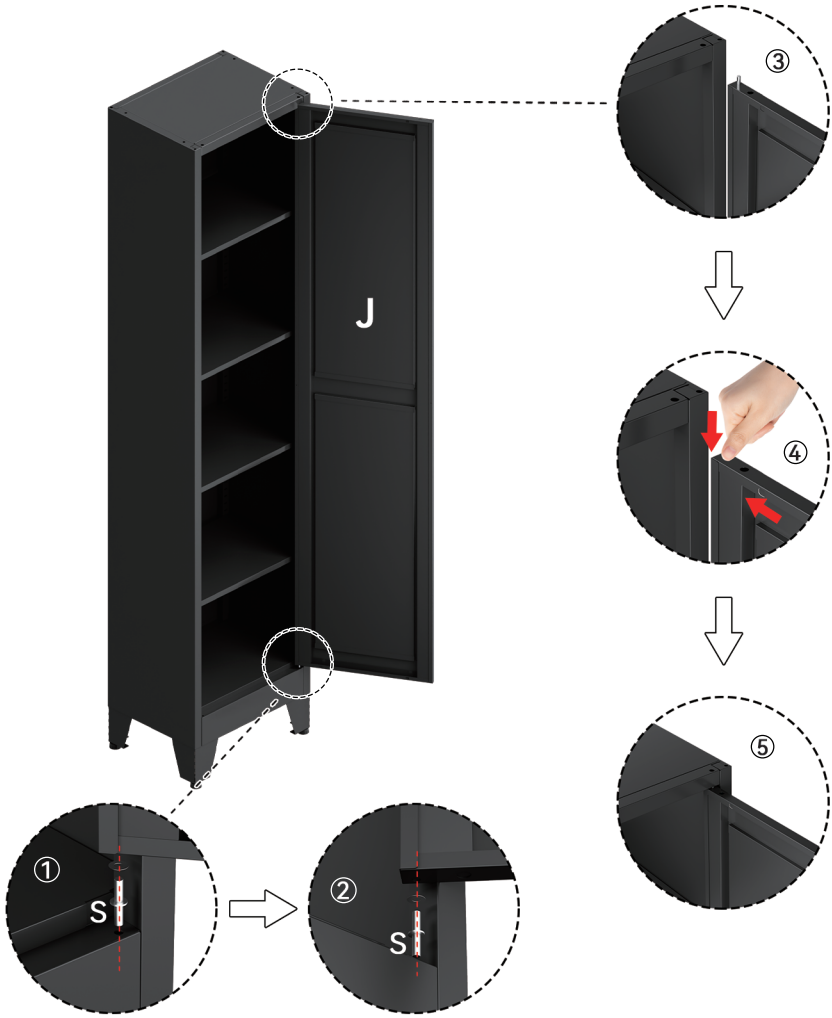

Drop the bottom hinge (S*1) into the pre-drilled hole in the base frame-add the small plastic ring. Line up the hole in the door bottom with the pin and set the door(J) down.

13

Q*2

T*1

U*2



Attach Handle and Magnets(T&Q)
Attach magnetic pieces(Q*2) to the door corner. Install door handle(T*1) using screws(U*2).



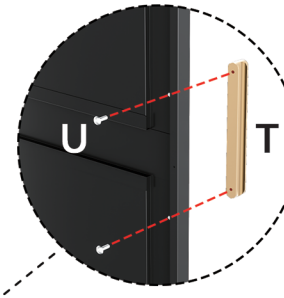

14

W*2 

Secure to Wall (Optional)

Push cabinet against wall.

Mark drilling points through the pre-drilled holes in back panel.

Drill holes and insert wall plugs (W*2).

Secure cabinet with screws provided.

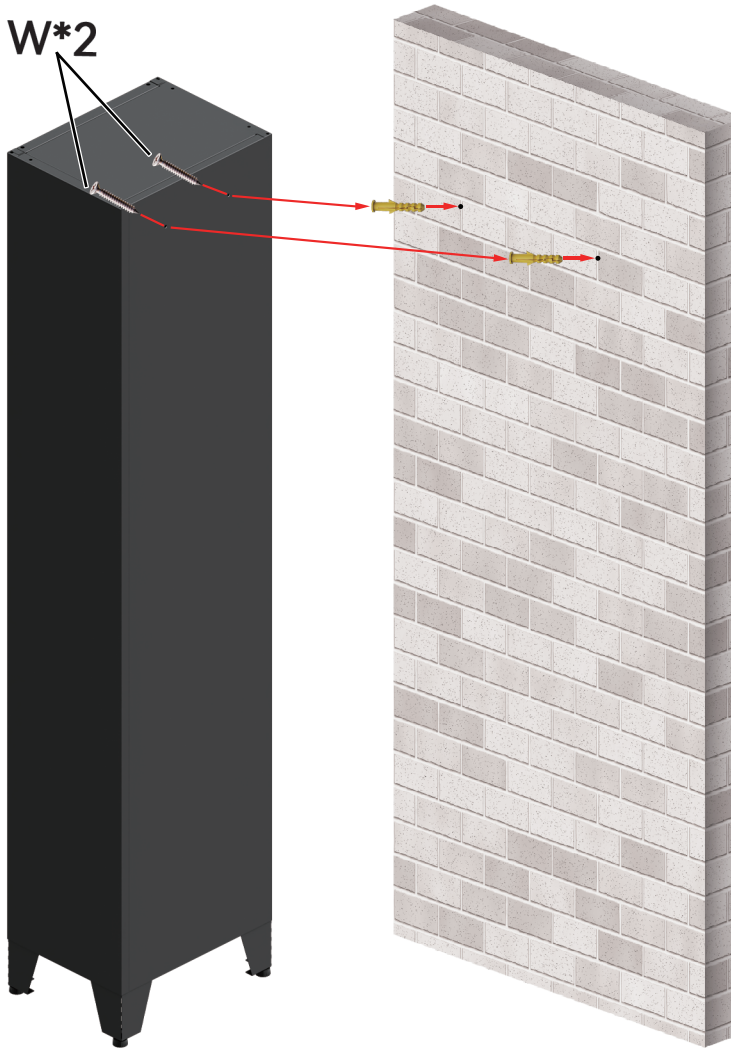

Problems and Solutions

Question 1: when encountering uneven height of two door panels,
adjust the bottom adjustment foot to make it flat.

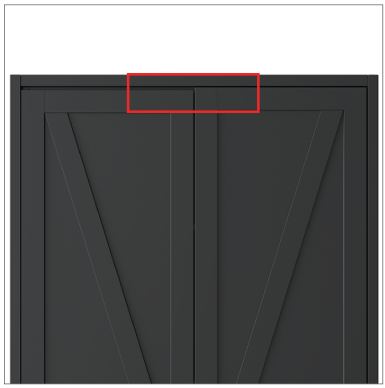

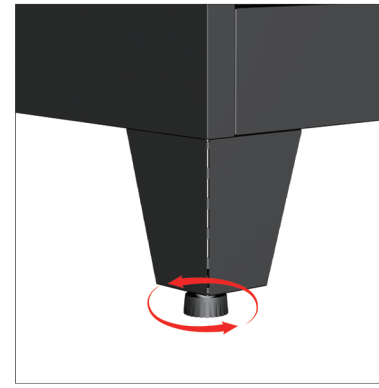

Question2: When the door is closed, it still protrudes outward.
That's because the door is made of steel plate and has stretchability.
You can adjust it according to the method shown in the picture.







SKU:MZ04BK02 MZ04WH02 MZ04BG02

Metal Cabinet-Installation Manual