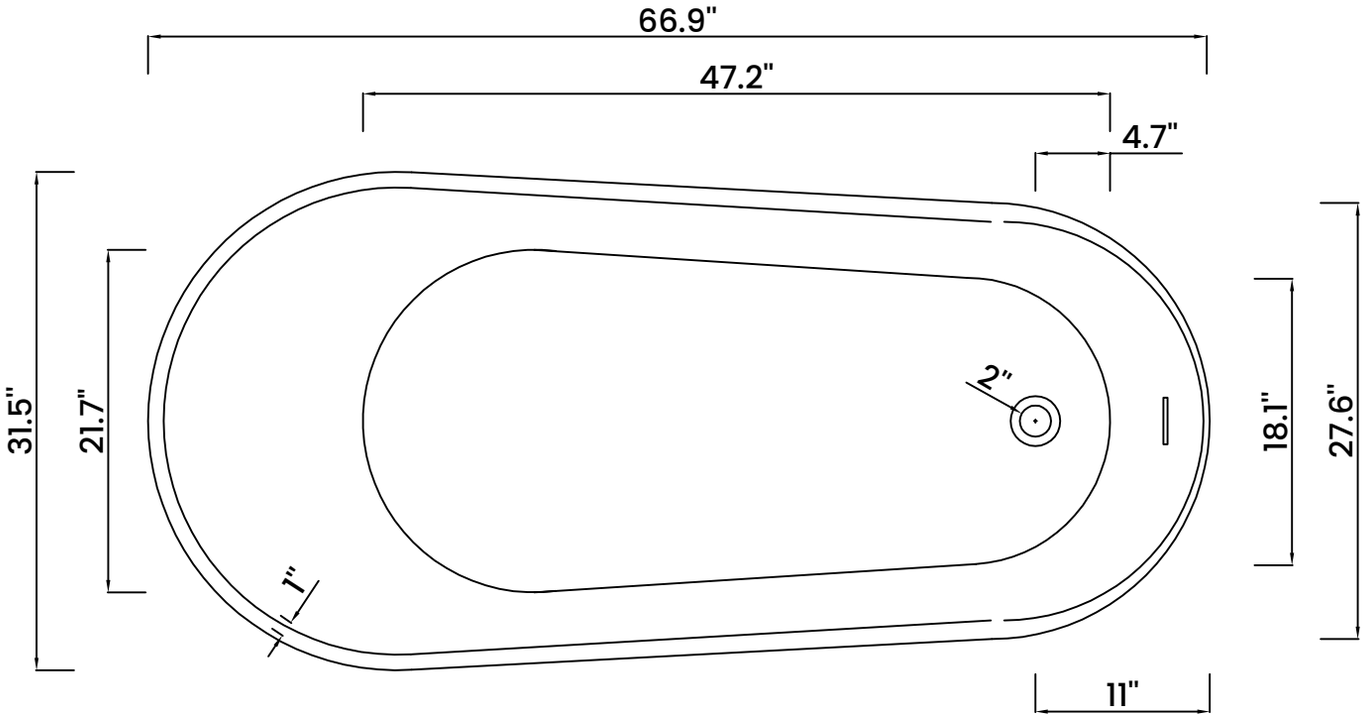
66.9"
47.2"
4.7"
31.5"
21.7"
2"
18.1"
27.6"
1"
11"

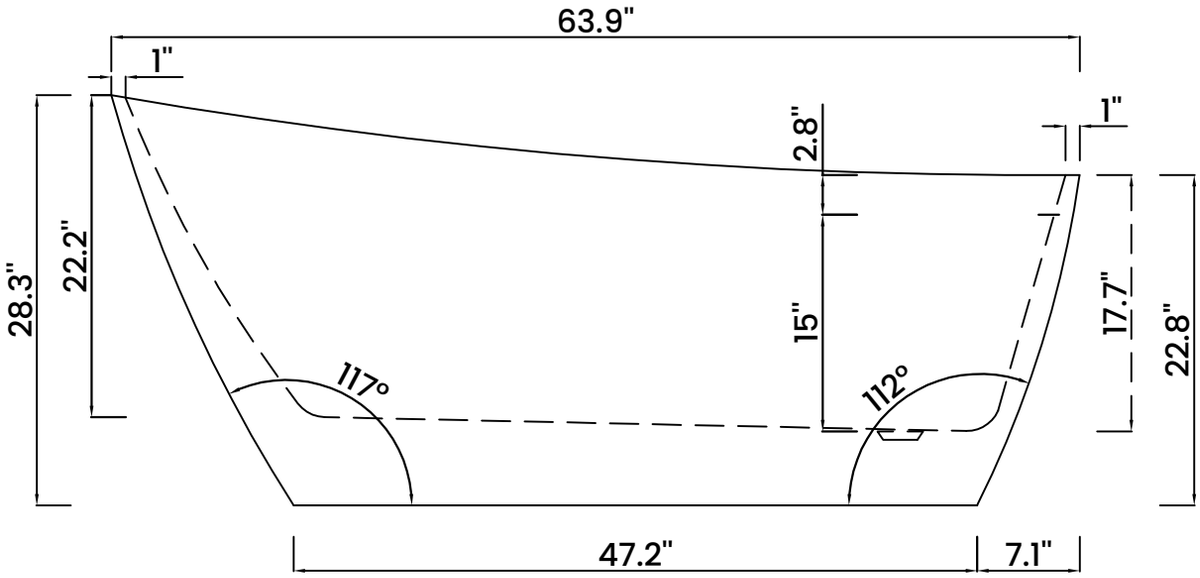
63.9"
1"
1"
2.8"
28.3"
22.2"
15"
17.7"
22.8"
117°
112°
47.2"
7.1"

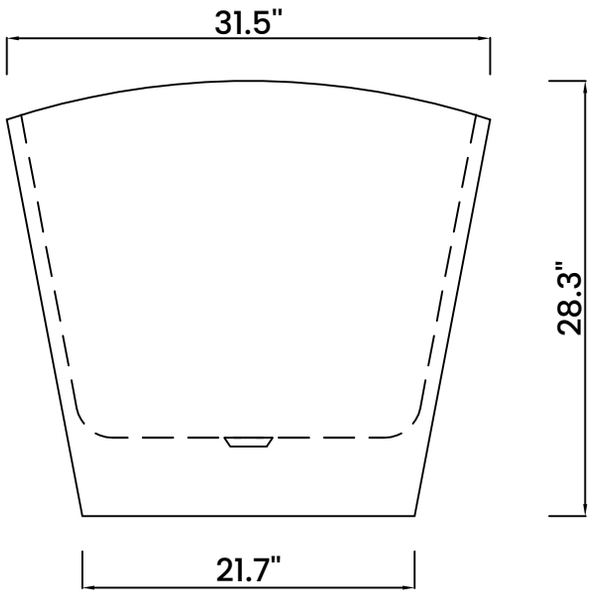
31.5"
28.3"
21.7"