ASSEMBLY INSTRUCTION

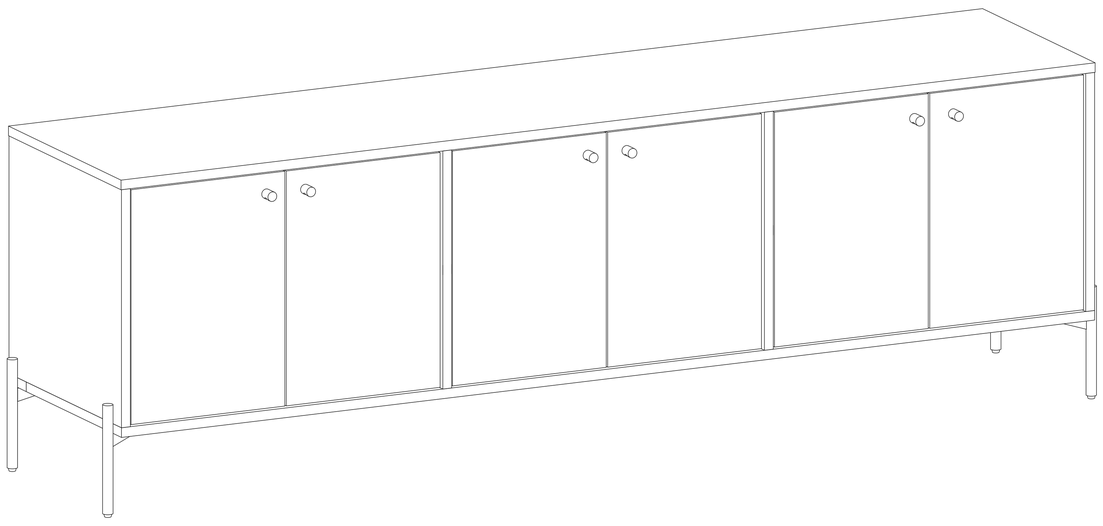

Hardware List

A	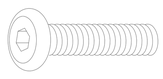	Bolt	6x20mm	16
B	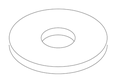	Flat Washer	6x16x2mm	16
C		Spring Washer	6x16mm	16
D		Allen Key	4mm	1
E		Handle		6
F		Bolt	4x25mm	6

G	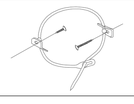	Tipping Hardware	1 set

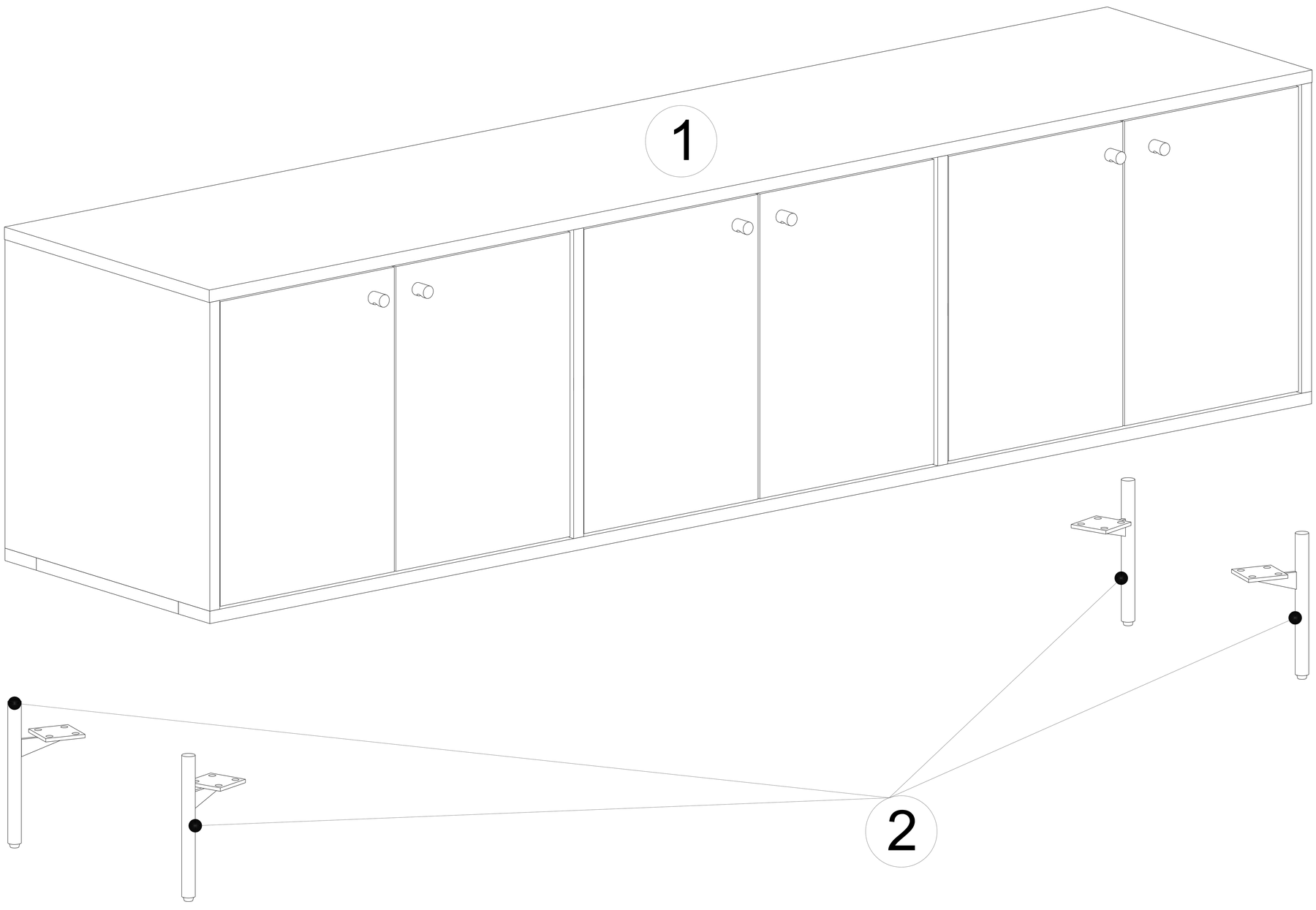

Made in Vietnam

Step 1

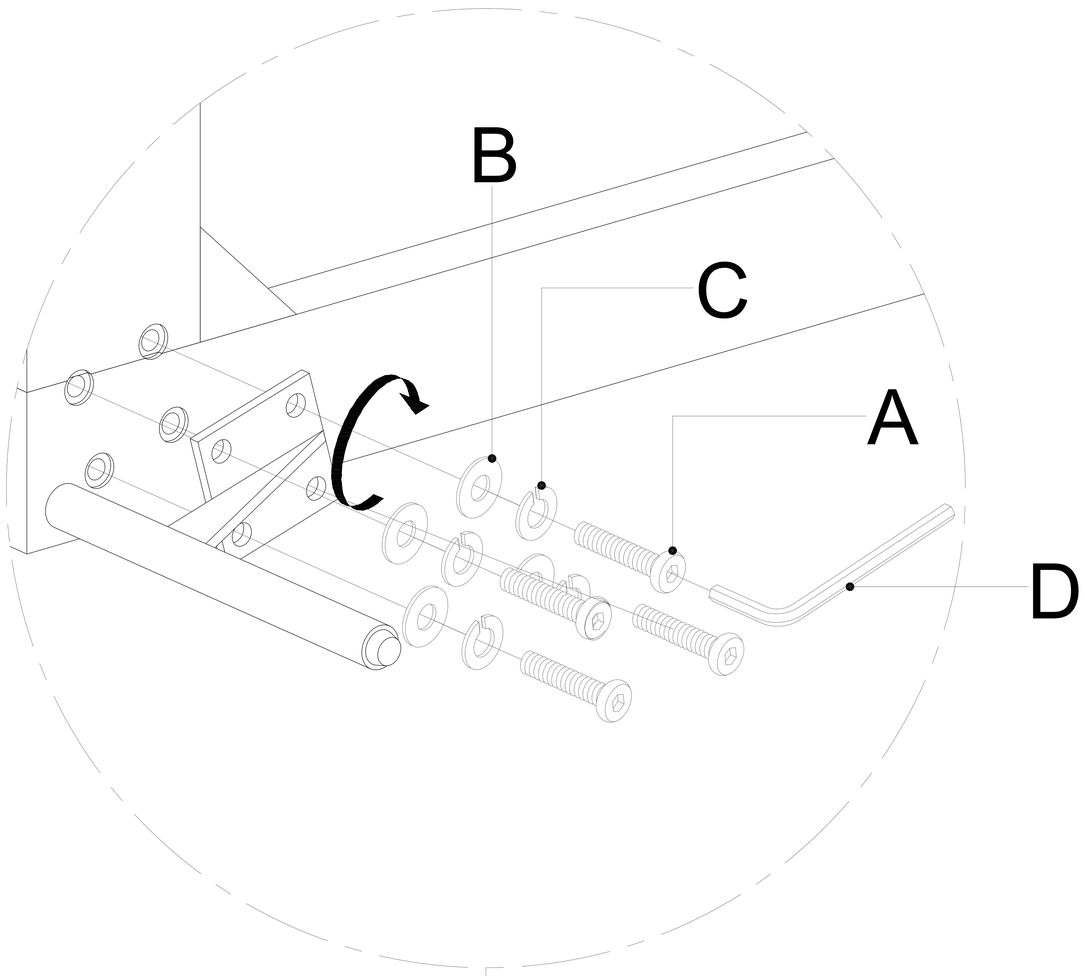

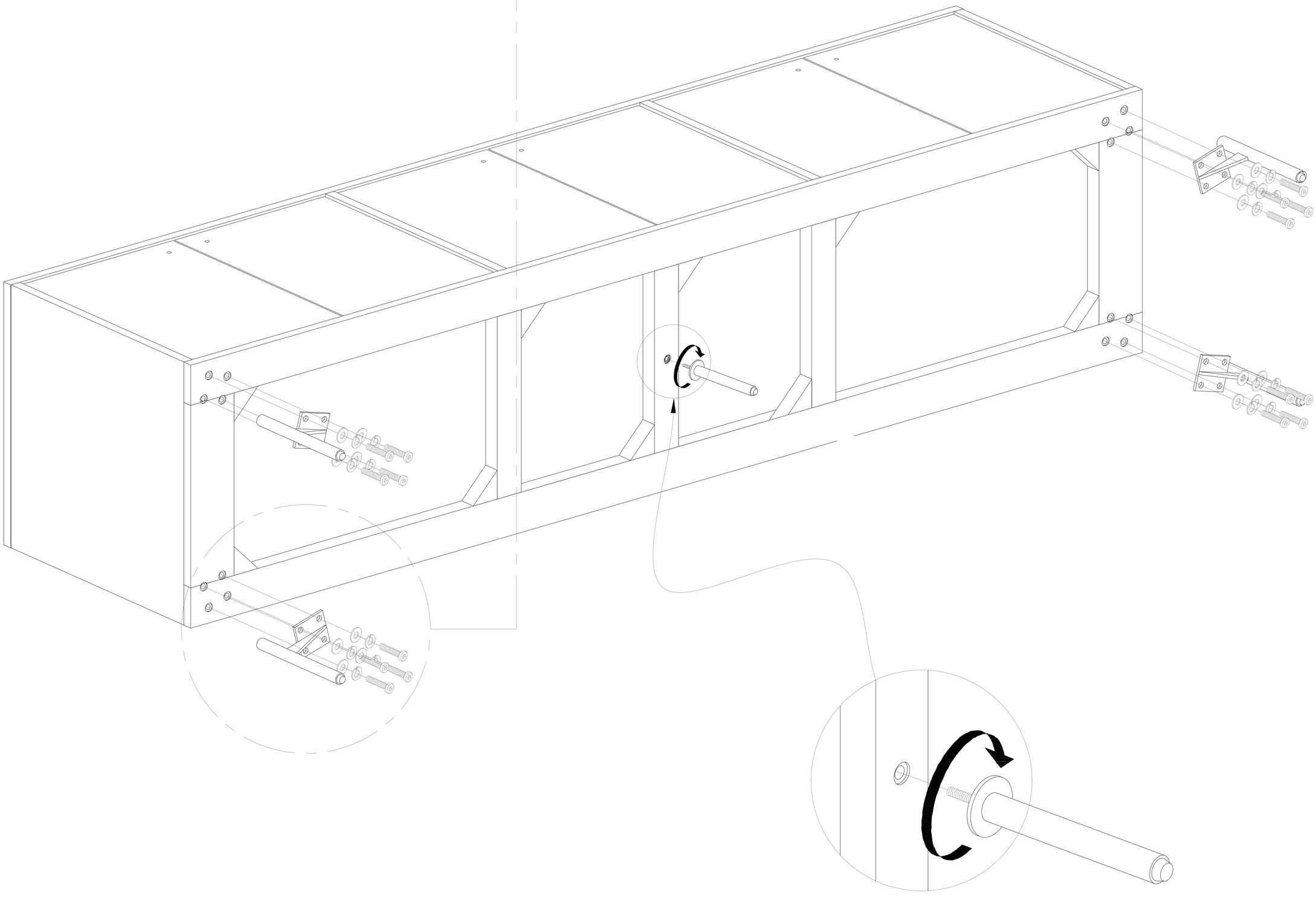

Made in Vietnam

Step 2

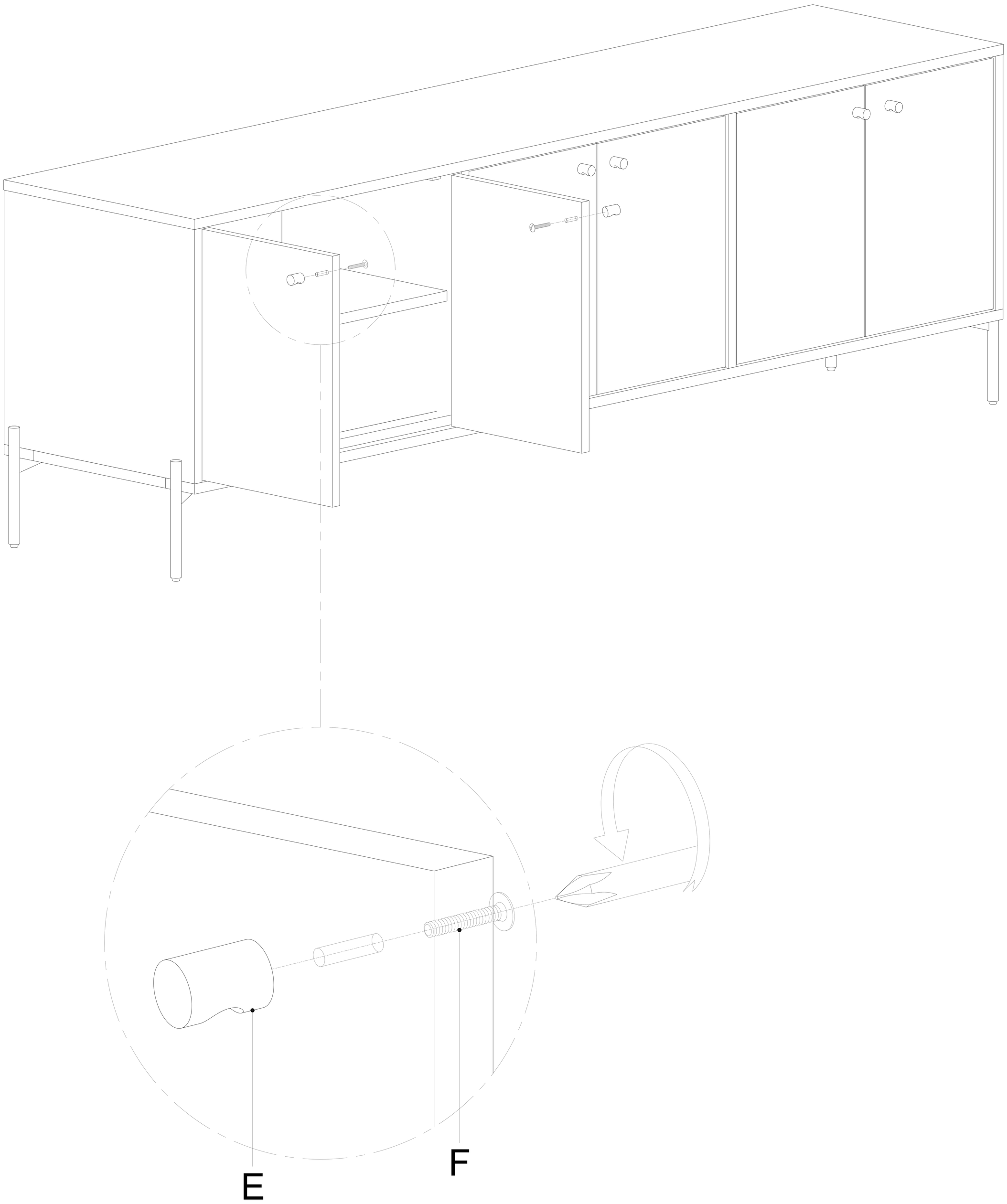

Made in Vietnam

Step 3

★ REMARK:There is a tip restraint kit provided on the back of this product please read the direction thoroughly and install immediately

Tipping Hardware

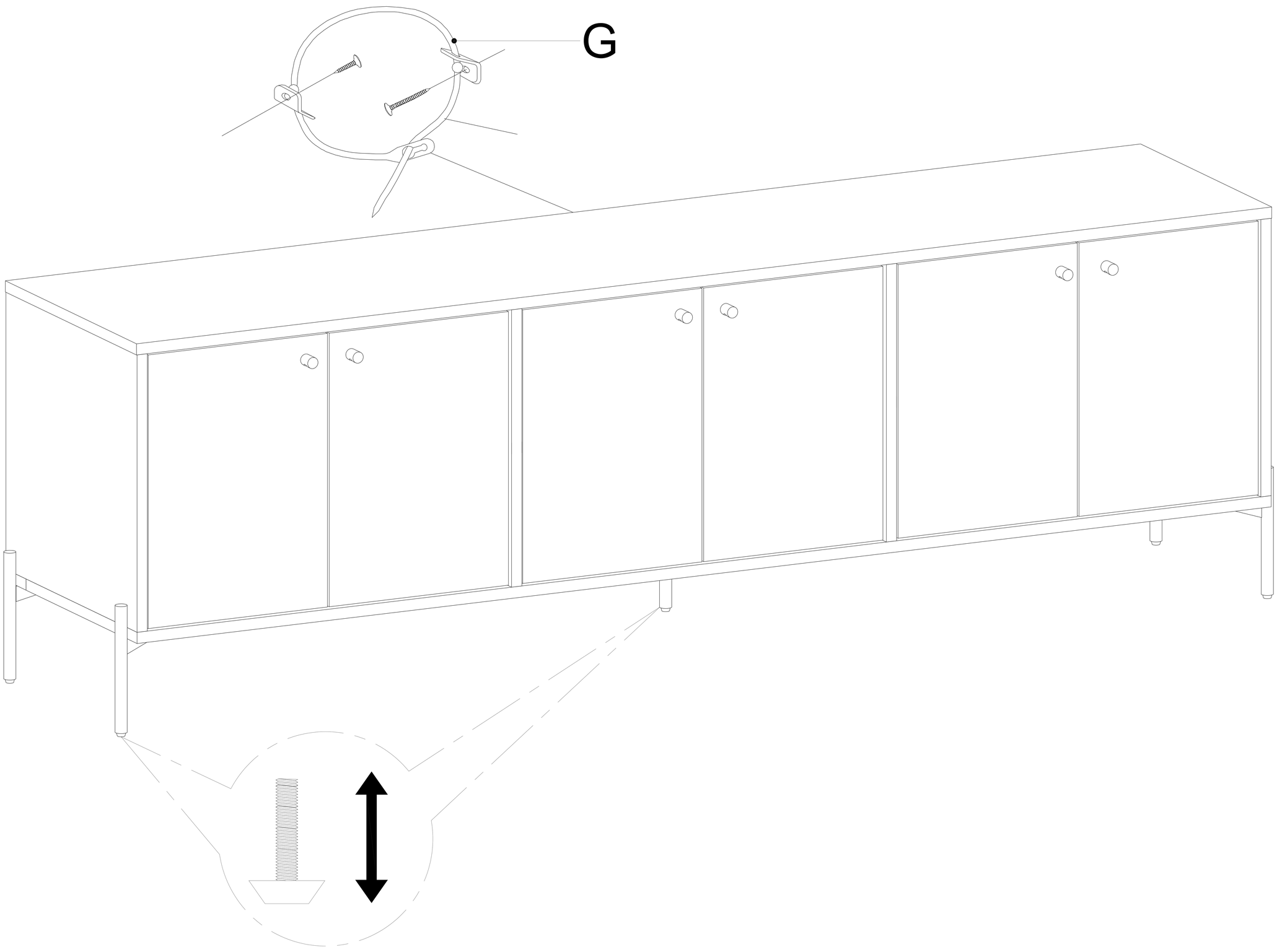

Made in Vietnam