ASSEMBLY INSTRUCTION

ITEM NO:.D2820-28 D2851-53 SOFA

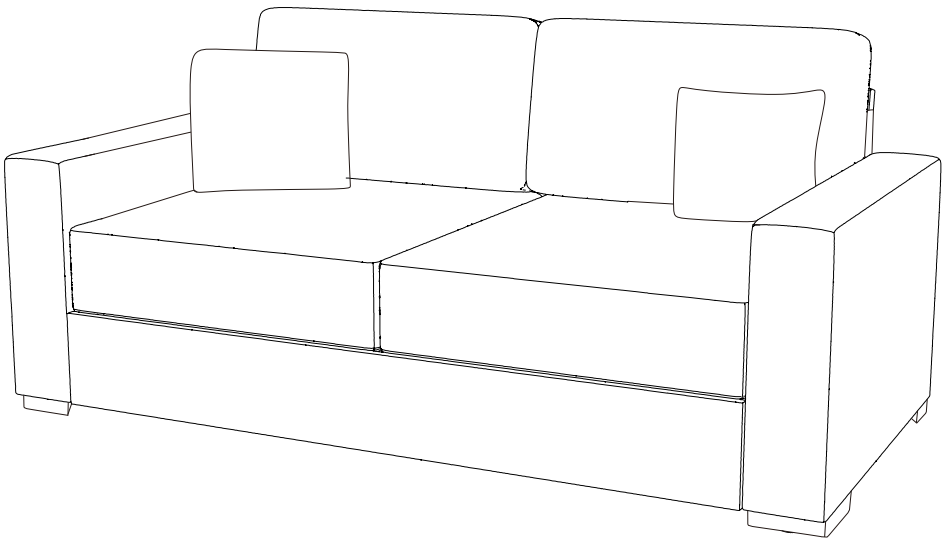

PARTS LIST

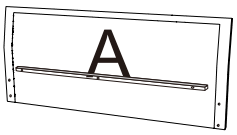 A Backrest x1	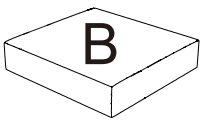 B Seat cushion x2	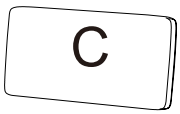 C Back Pillow x2	 D Throw pillow x2
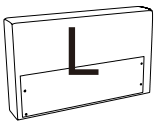 L Left Arm x1	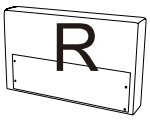 R Right Arm x1	 F Base Frame Front Panel x1	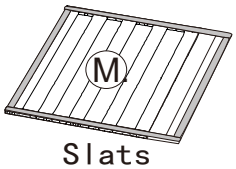 M Slats x2

HARDWARE LIST

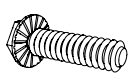 1 1/4*2cm x16	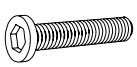 2 5/16*8cm x4	 3 x4	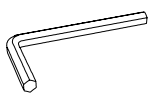 4 40mm*100mm x1
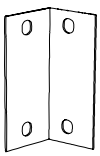 5 x4	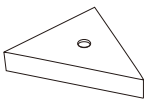 6 x4		

BEFORE ASSEMBLY

Open up Velcro of Non-Woven Fabric cover
on the bottom to revove hardware legs and parts.

1、Please open the black woven fabric with Velcro closure on the bottom of the frame then cut off the black straps before removing the parts for assembly.

2、After removing the cushion from the compress bag, please allow air to flow through the cushion for few days. You can try to fluff cushion by push in and push out on all four sides of the cushion. Hitting the top/front of the cushion
with your hand to fluff them after installation.

3、Please allow at least 24 hours for the cushions to recover to its natural state after removing from the package.

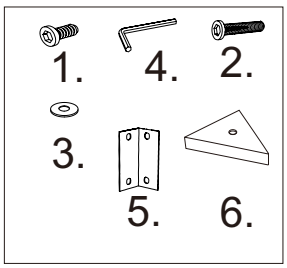

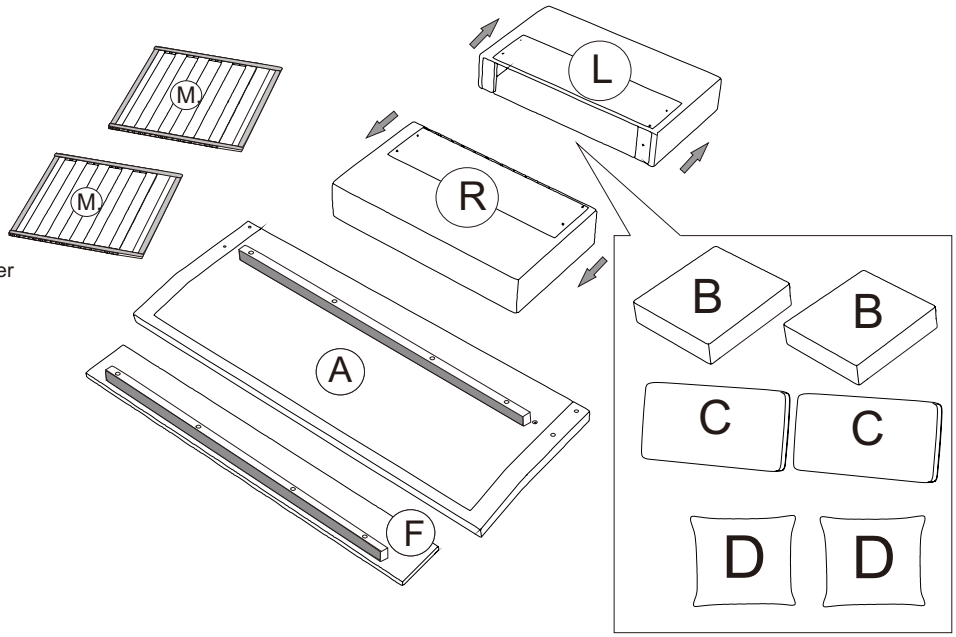

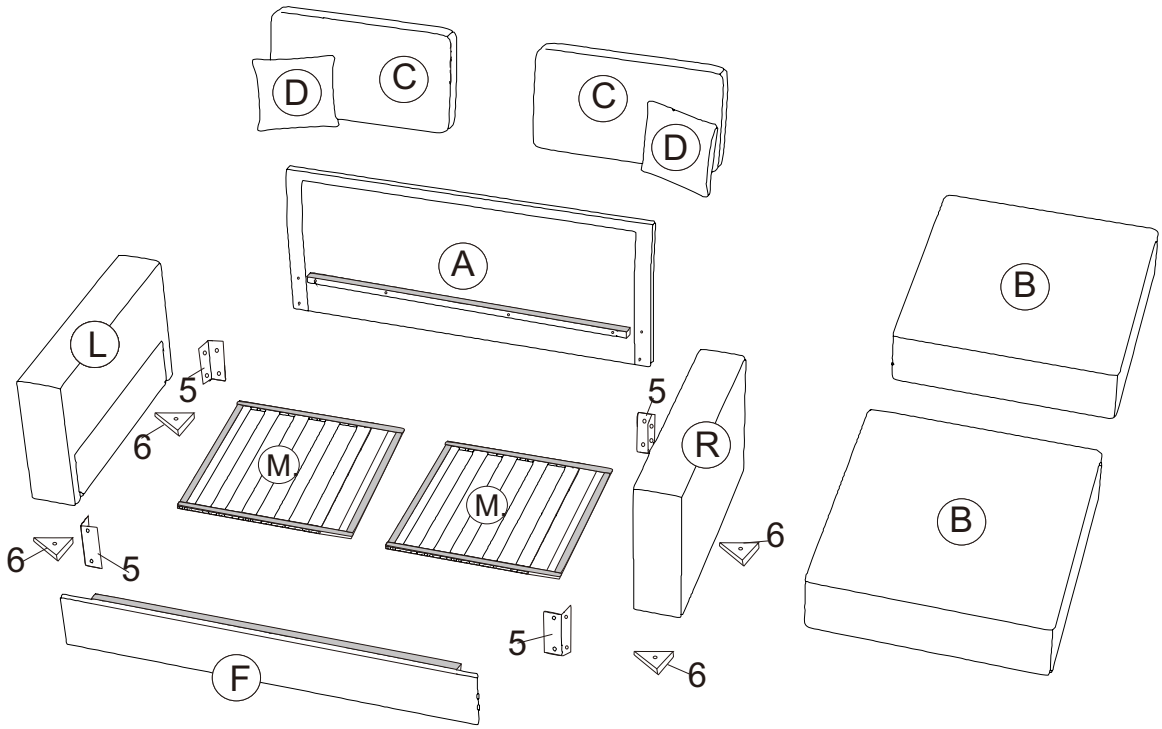

SOFA ASSEMBLY INSTRUCTION

Step1

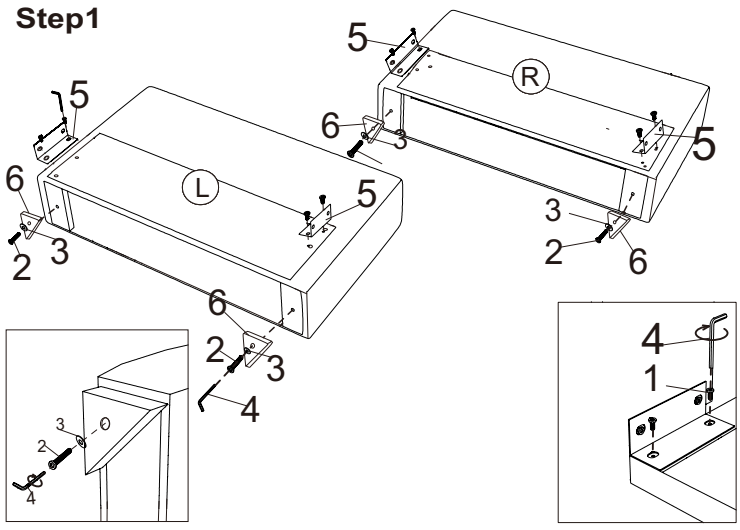

Step2

Please note: Make sure to distinguish between the front and back armrest during assembly.

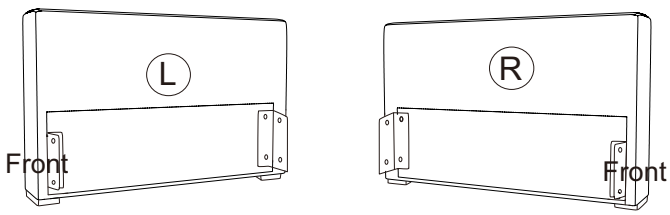

Step3

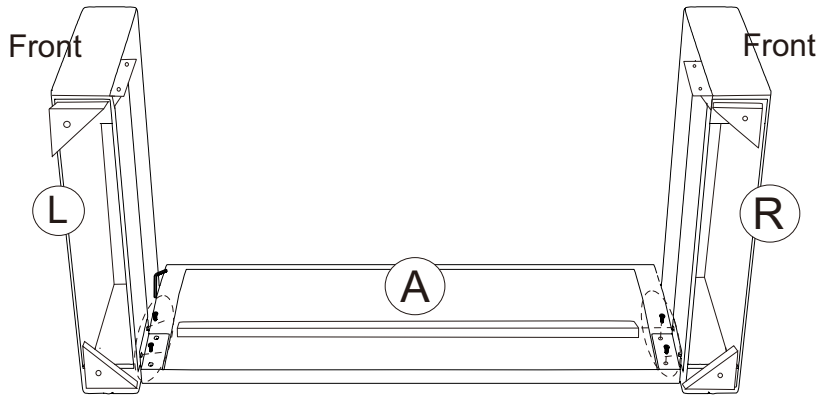

Make sure to align Part#L,L-1,G, and 7,6, at the same level. If there is any issue, use the oval screw holes to adjust.

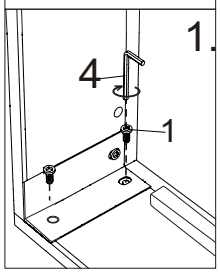

Step4

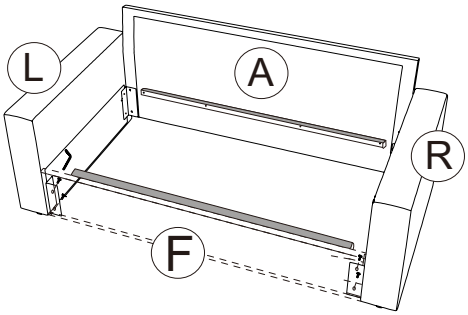

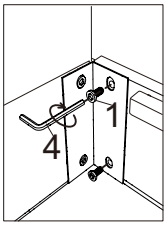

Step5

Face the Velcro upward.

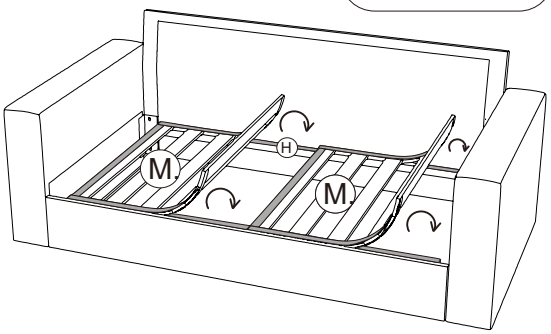

Step6

Face the Velcro upward.

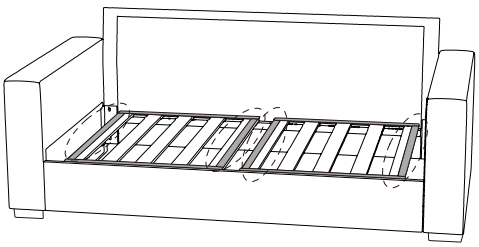

Step7

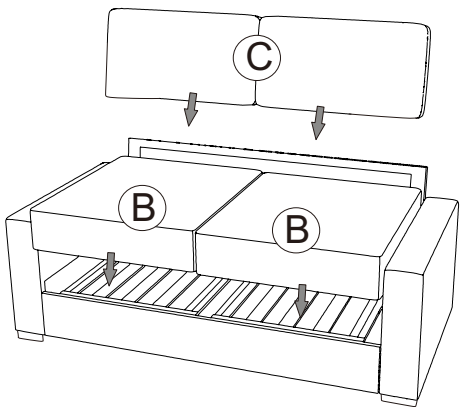

Step8

