ASSEMBLY INSTRUCTIONS

401BQ QUEEN BED

A Headboard

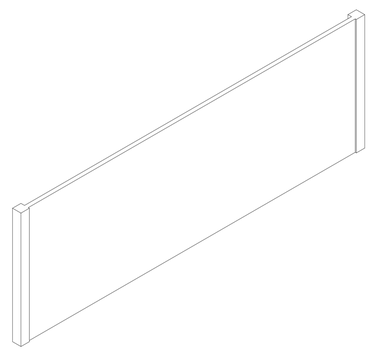

1pc

B Footboard

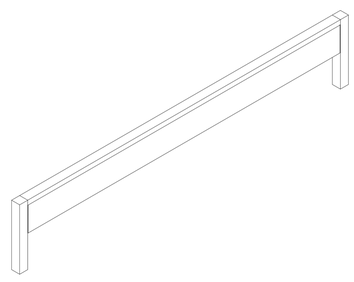

1pc

C Side Rail

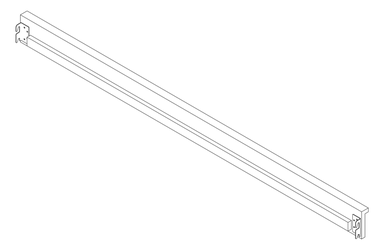

2pcs

D Bed Slat

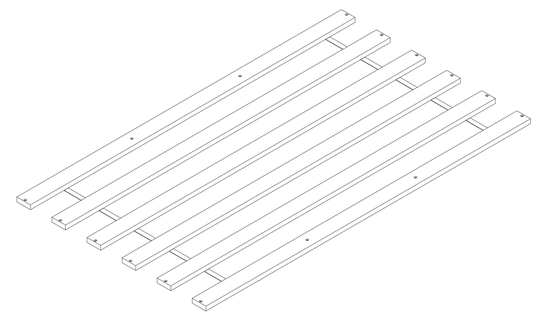

2sets (6pcs per set)

E Center Bar

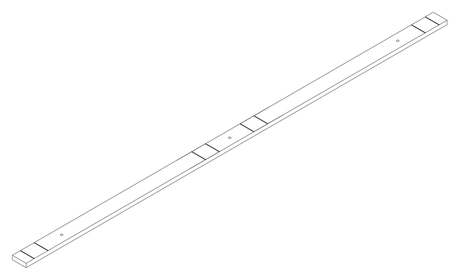

2pcs

F Support Leg

6pcs

G Headboard Post (Left)

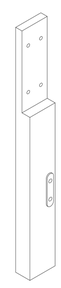

1pc

H Headboard Post (Right)

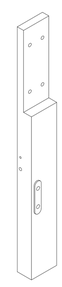

1pc

I Headboard Bar

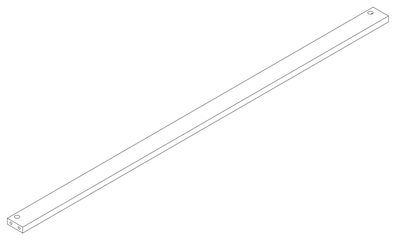

1pc

J Dowel M8 x 35mm

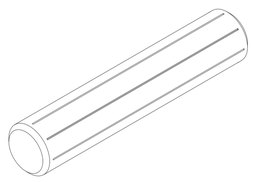

2pcs

K Cam Bolt 5 x 25mm

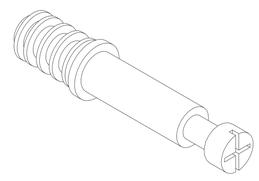

2pcs

L Cam Lock 15 x 12mm

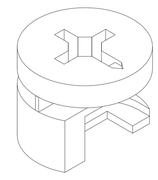

2pcs

M Cam Lock Cover 17 x 5mm

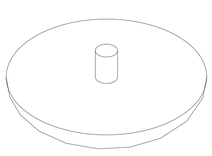

2pcs

N Screw M4 x 32mm

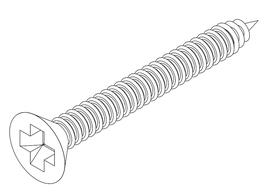

32pcs

O JCBB Bolt M8 x 20mm

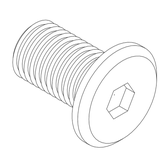

8pcs

P JCBC Bolt M6 x 30mm

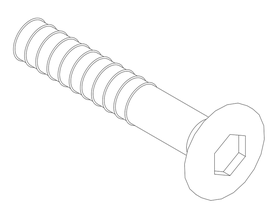

8pcs

Q Spring Washer M6

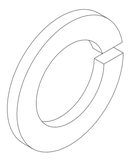

8pcs

R Flat Washer M6

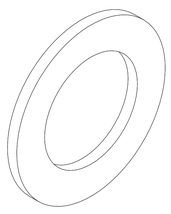

8pcs

S Allen Key M4

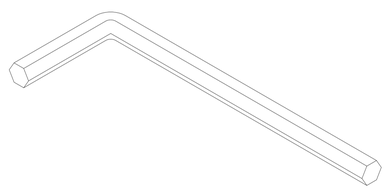

1pc

T Allen Key M5

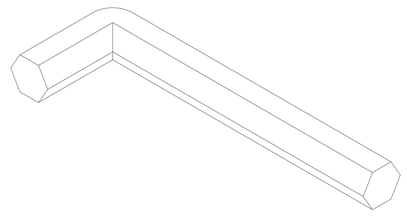

1pc

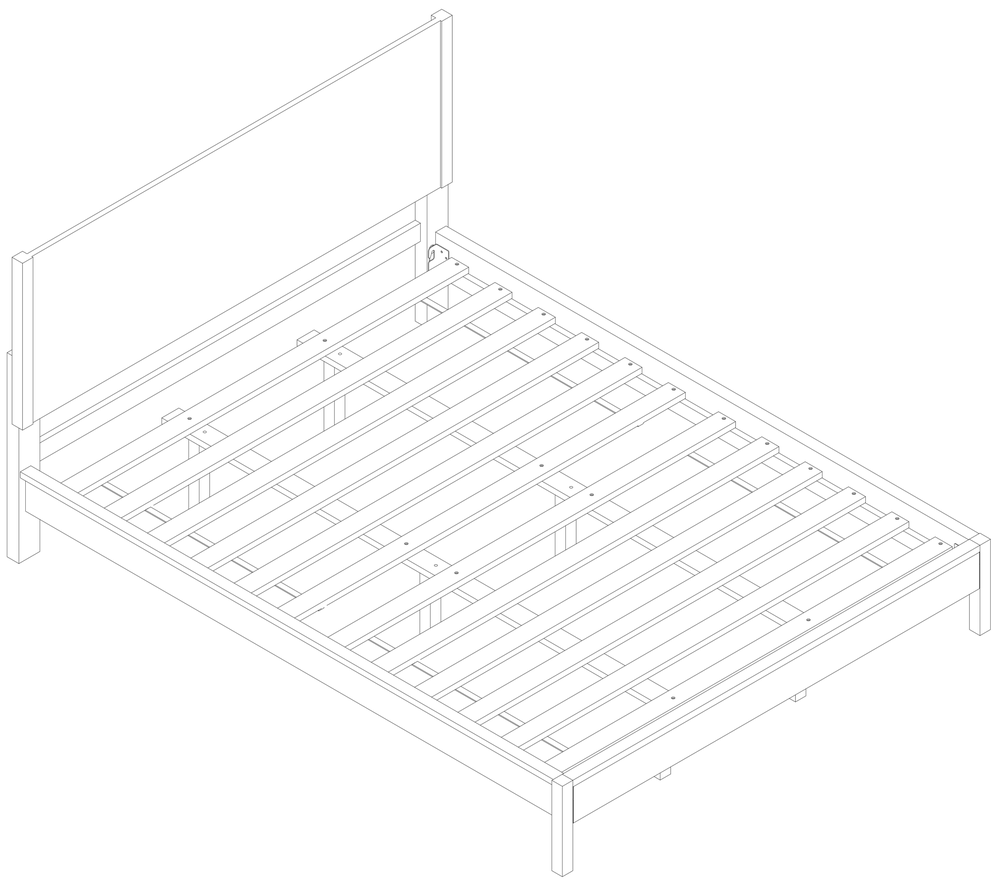

The above page lists all the contents included in the box. Please take the time to identify the hardware as well as the individual components to this product. As you unpack and prepare for assembly, place the contents on a carpeted or padded area to protect them from damage.

1 Insert Cam Bolt (K) into the Left & Right Headboard Post (G & H) with a screwdriver (not provided). Then, insert Dowel (J) and Cam Lock (L) into the Headboard Bar (I).

NOTE : - Ensure the arrows on each Cam Lock (L) point towards the nearest edge with holes.

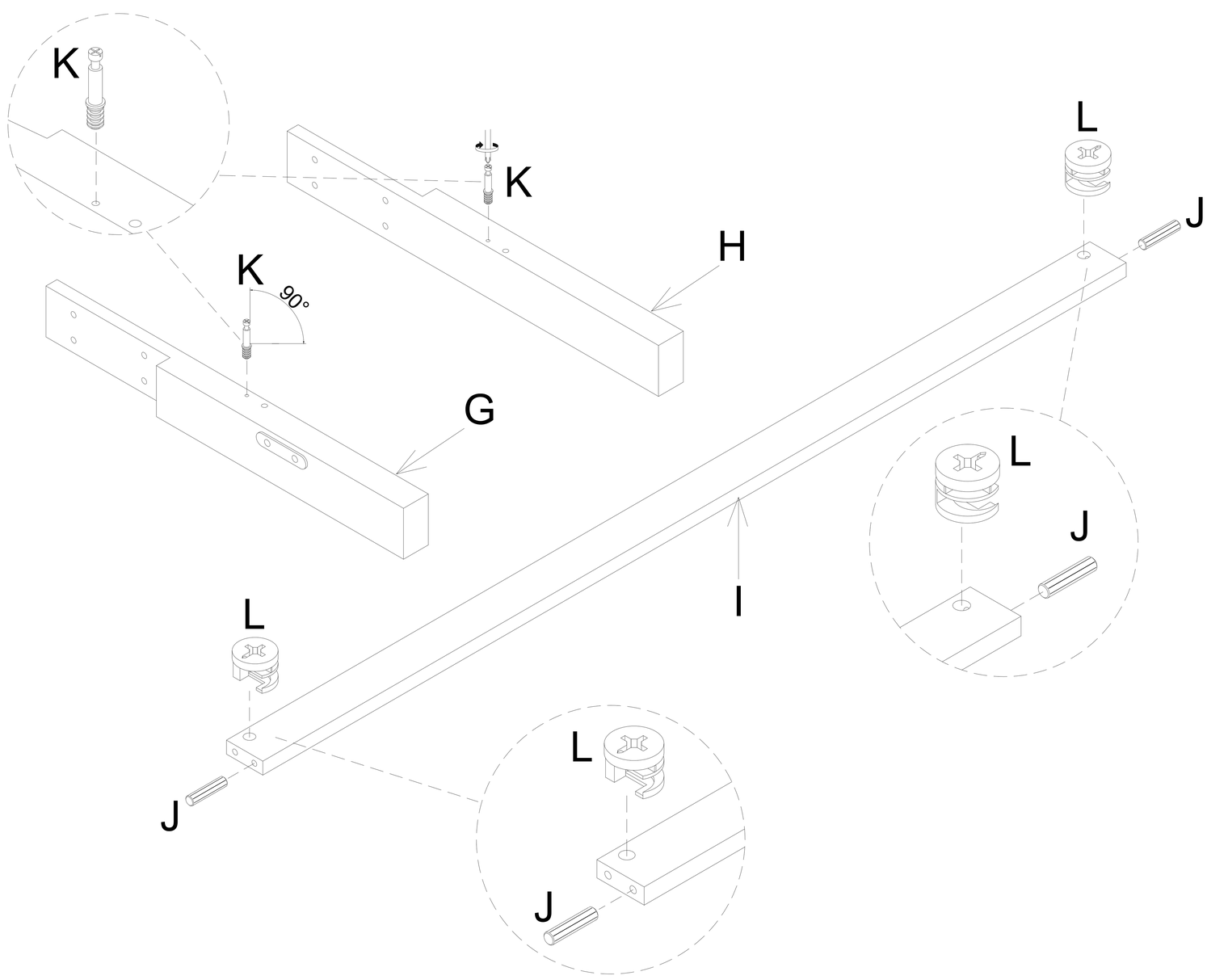

2 Attach the Left & Right Headboard Post (G & H) to the Headboard Bar (I) and secure the Cam Lock (L) with a screwdriver (not provided). Cover the Cam Lock (L) with Cam Lock Cover (M).

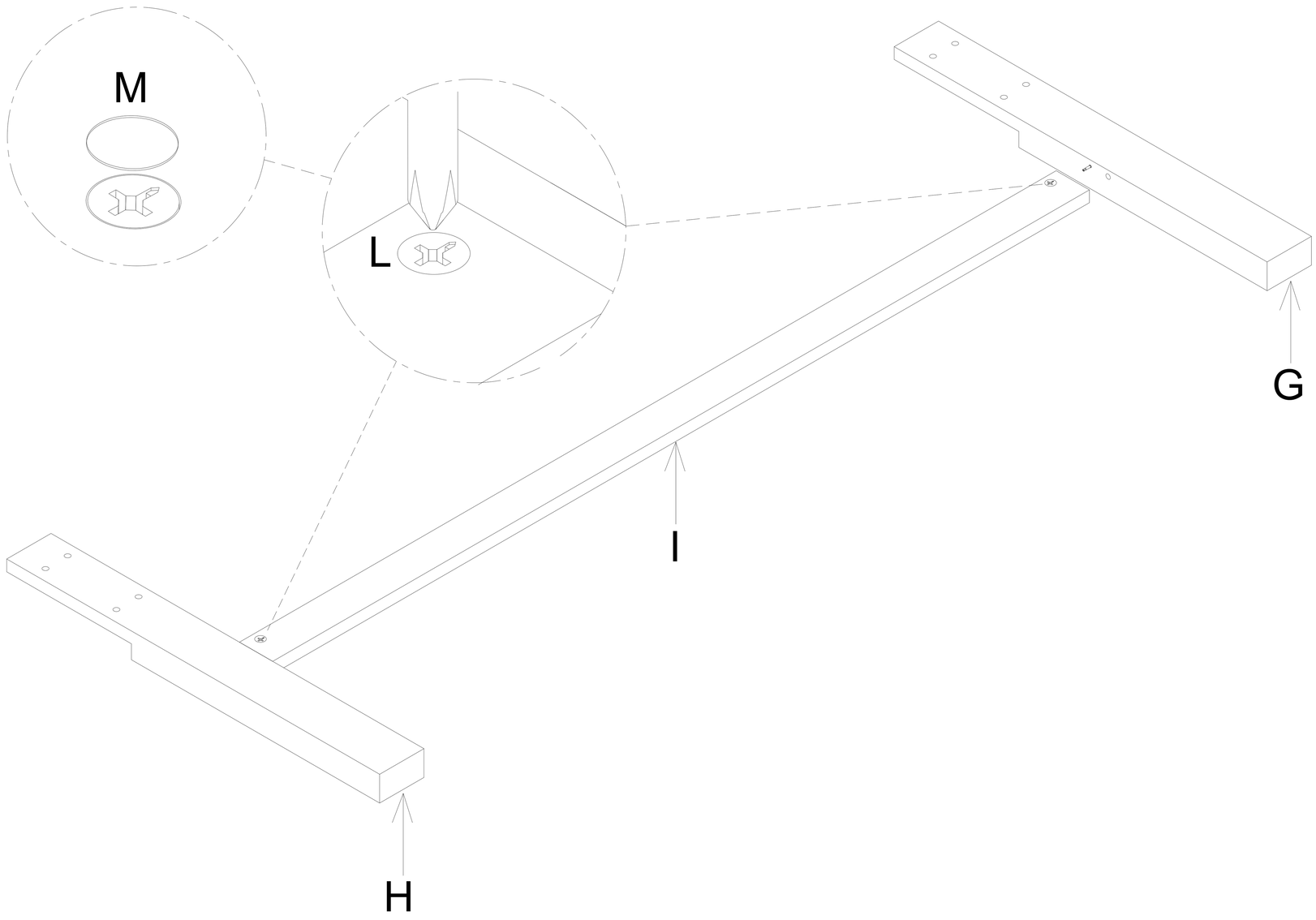

3 Attach the Left & Right Headboard Post (G & H) to the Headboard (A) using JCBC Bolt (P), Spring Washer (Q) and Flat Washer (R) with the Allen Key (S).

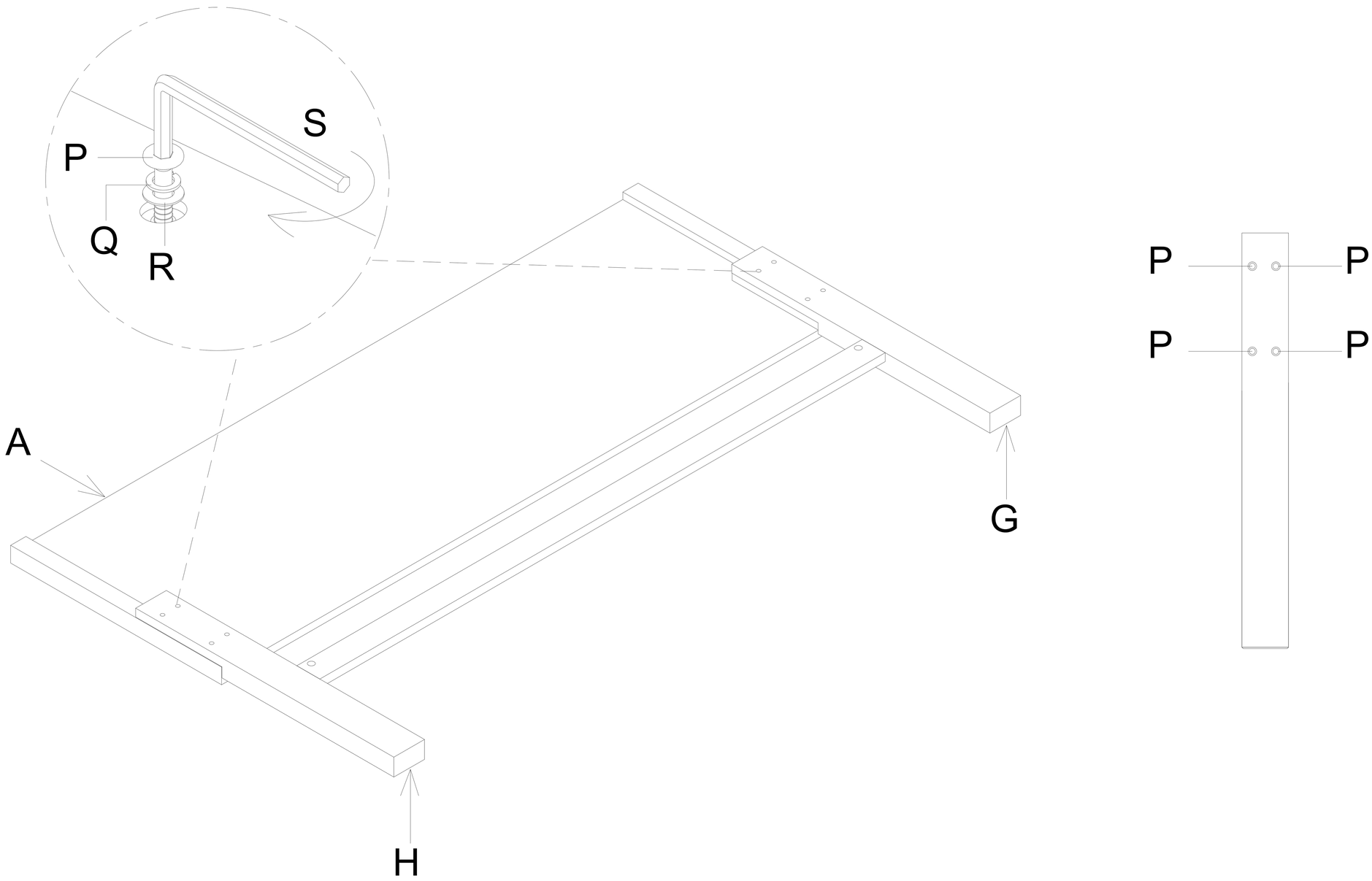

4 Loosely attach JCBB Bolt (O) to the brackets of the Left & Right Headboard Post (G & H) and the Footboard (B). Then, attach the Side Rail (C) to the Left & Right Headboard Post (G & H) and the Footboard (B) and fully tighten the JCBB Bolt (O) with the Allen Key (T).

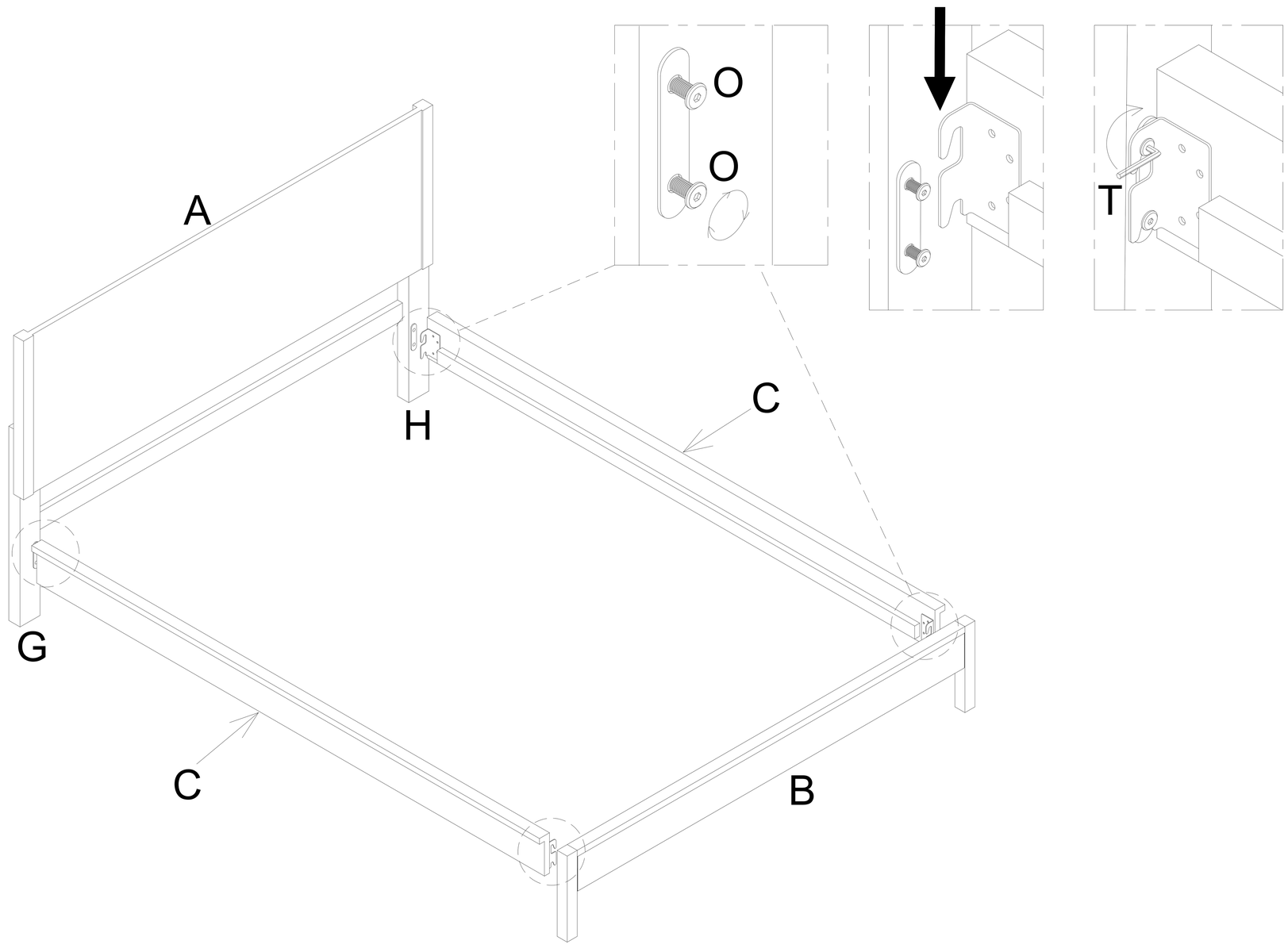

5 Screw in the Support Leg (F) to the Center Bar (E).

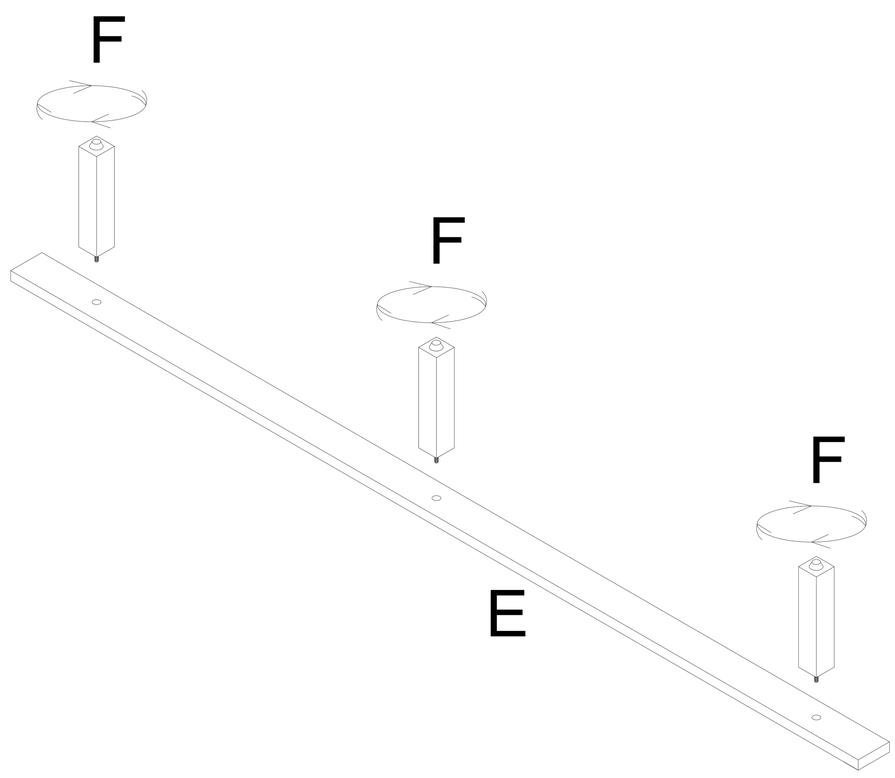

X 2

6 Place the assembled Center Bar (E) and Support Leg (F) between the Headboard (A) and the Footboard (B). Then, attach the Bed Slat (D) to the Side Rail (C) following to the remarks on the Center Bar (E), using Screw (N) with a screwdriver (not provided). Adjust the levelers as needed.

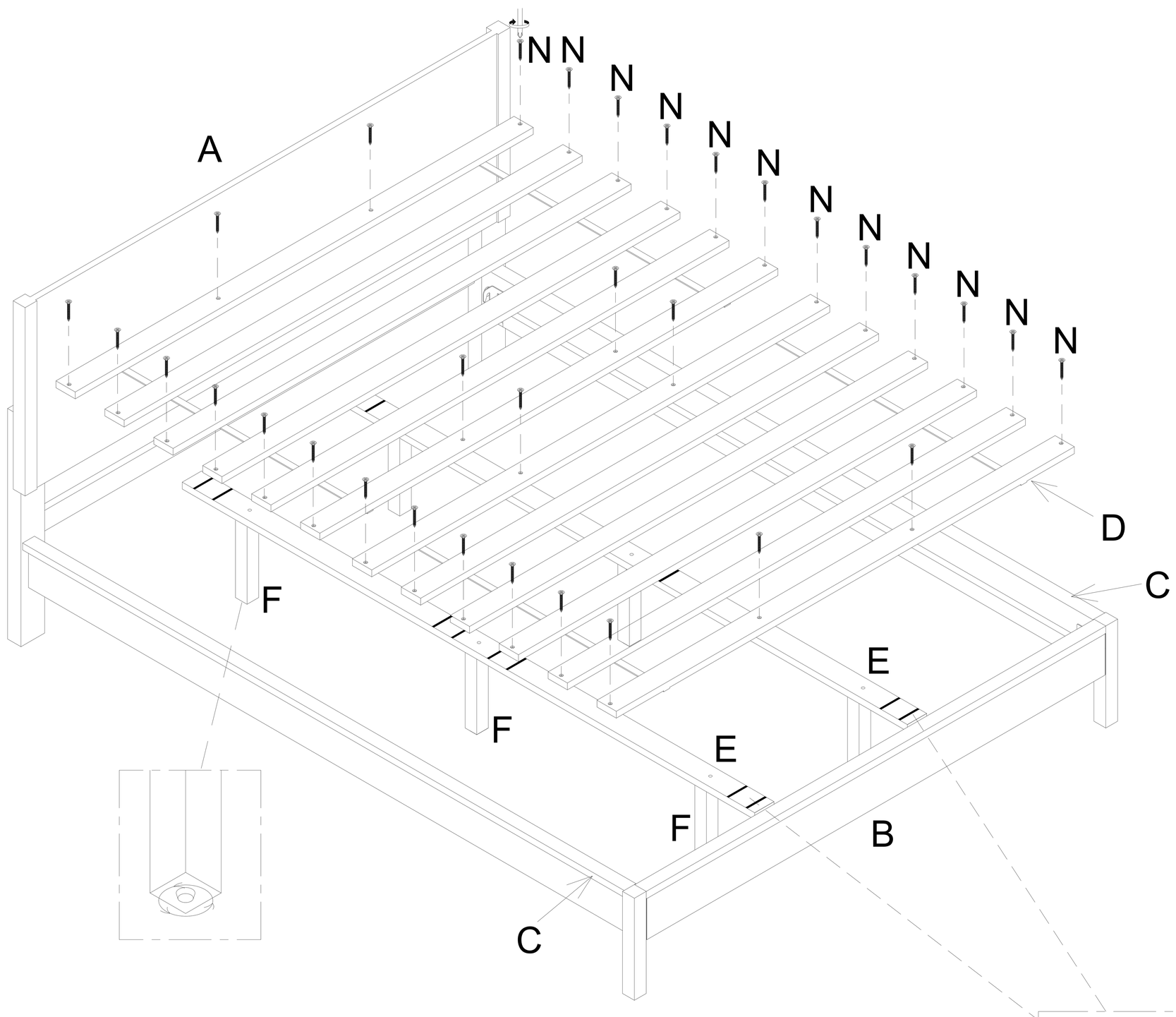

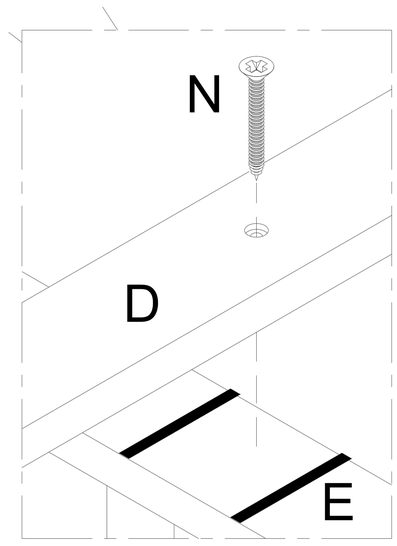

*Assemble the Bed Slat along the pre-marked lines on the Center Bar.

Cleaning & Care

Treat surfaces with care. Surfaces are resistant to scratches but are not scratch resistant. Clean surfaces with a dry or damp soft cloth. Do not use abrasive cleaners. Hardware may loosen over time. Periodically check that all connections are tight.