Assembly Instructions

Caution : You must read this before you proceed

Care & Maintenance



- Not for commercial use. For residential use only.



- Furniture may scratch floors. We recommend using furniture pads to protect your floors.



- Do not put hot items directly on furniture surface.



- Do not clean furniture with harsh cleansers or polish



- Do not place furniture under direct sunlight.



- Do not place furniture near heating or cooling vents.



- Do not write on furniture without a padded barrier to protect the surface.



- Do not place furniture outside . For indoor use only.



- Stains may be removed with mild soap solution and damp cloth.



- Children should not climb or jump on the furniture.



- Dust and pick-up spills using a clean, non-colored, lint-free cloth.

Please look in carton for hardware packs and legs.

COFFEE TABLE



Parts List

Label	Picture	Description	QTY
A	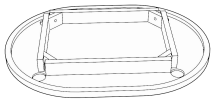	Table Top	1
B		Leg	4
C	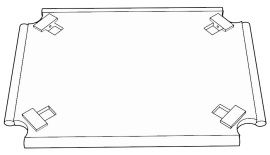	Shelf	1

Hardware

Label	Picture	Description	QTY
①	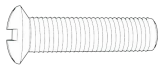	Bolt（M6x55mm）	9
②		Flat Washer	9
③		Spring Washer	9
④		Adjustable Foot	5
⑤		Allen Wrench	1

Assembly Preparation

Before Beginning Assembly:

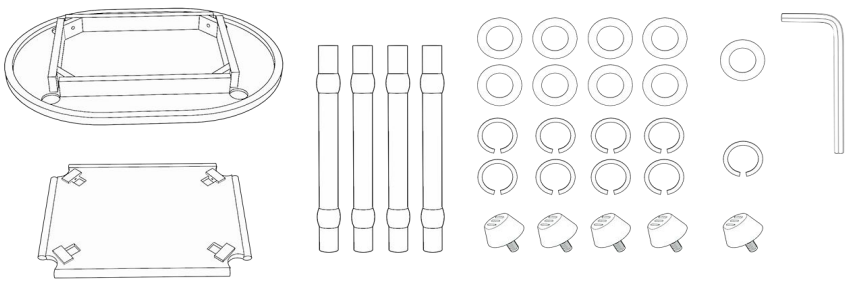

- Read instructions, cover to cover-
- Have 2 adults on hand for assembly-
- Do not assemble on flooring or carpet-
- Assemble on a clean non-marring surface (packing foam)-
- Save all packaging until finished-

Assembly Steps

overview

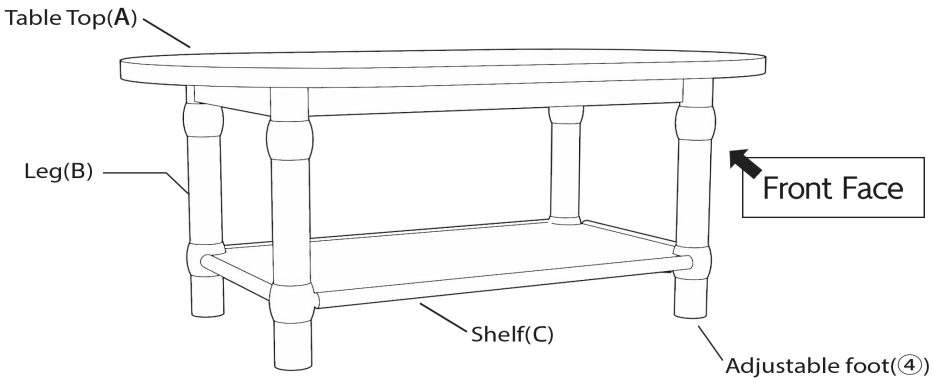

This Coffee Table has multiple parts and may require up to some 20 minutes to assemble. To give you an overview of the Coffee Table parts, the above picture is to help you put the various parts into perspective. Please read through the instructions below to familiarise yourself with the parts and steps before assembly.

Step 1-1

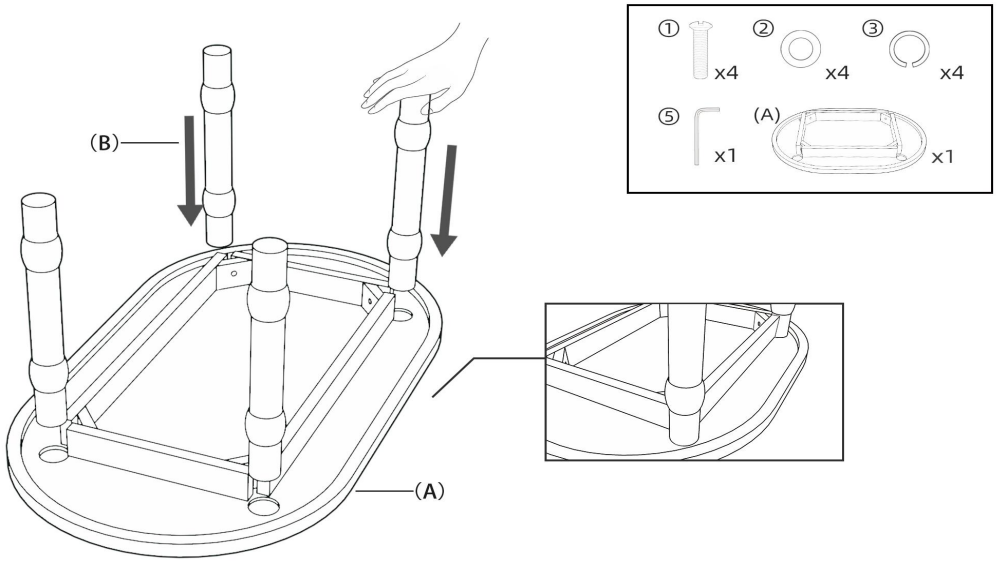

Place the Table Top(A) on a clean, non-marring surface, facedown. Place the four legs(B) into the recessed holes on the underside of the table top(A).

Step 1-2

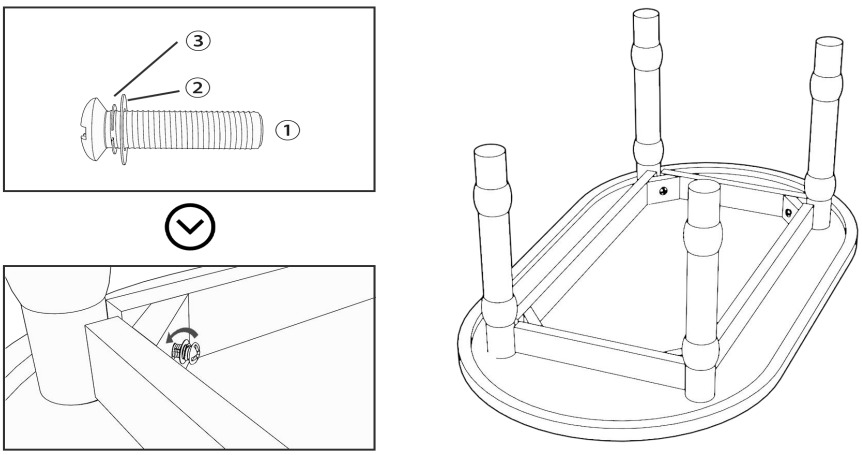

First , fit the Spring Washer (③) over the Bolt (①) , followed by the Flat Washer (②).
Fully tighten the screws of the four table legs (B)

Step 2

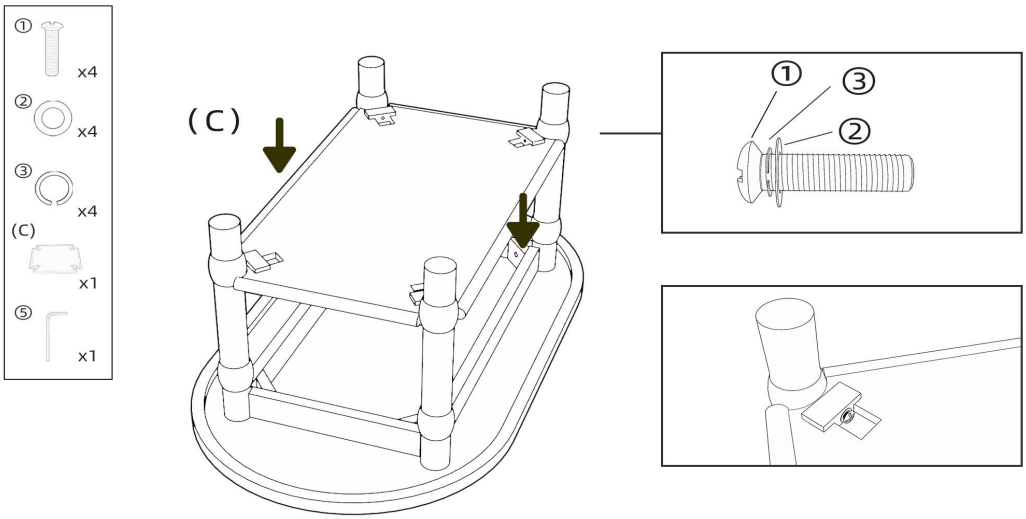

Place the shelf (C) in the corresponding position.
Fully tighten the bolts(①) for the four table legs, with spring washers (③) and flat washers (②) already placed onto each bolt.

Step 3	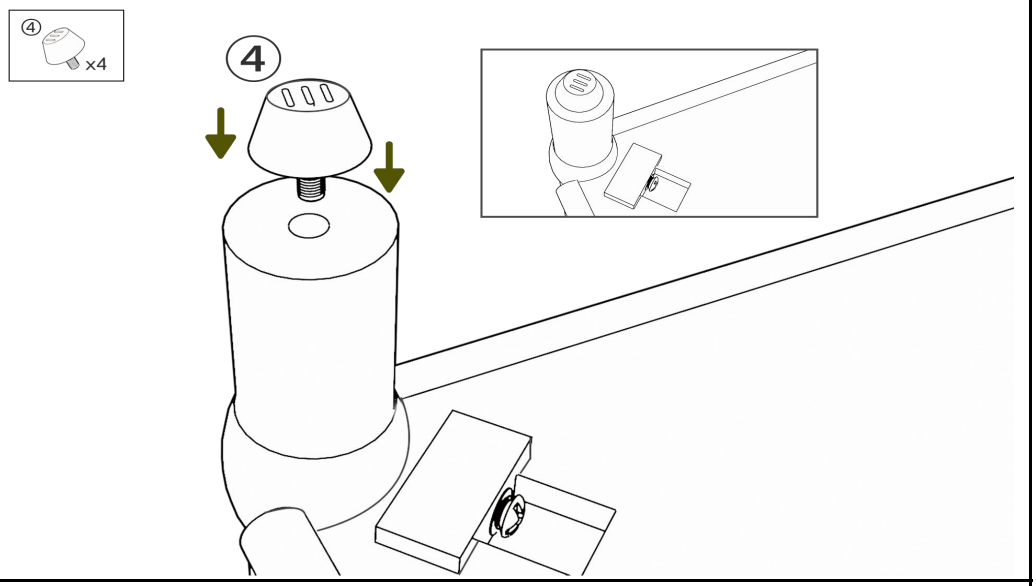
Screw the adjustable feet(④) into the bottoms of all four table legs(B)	
Step 4	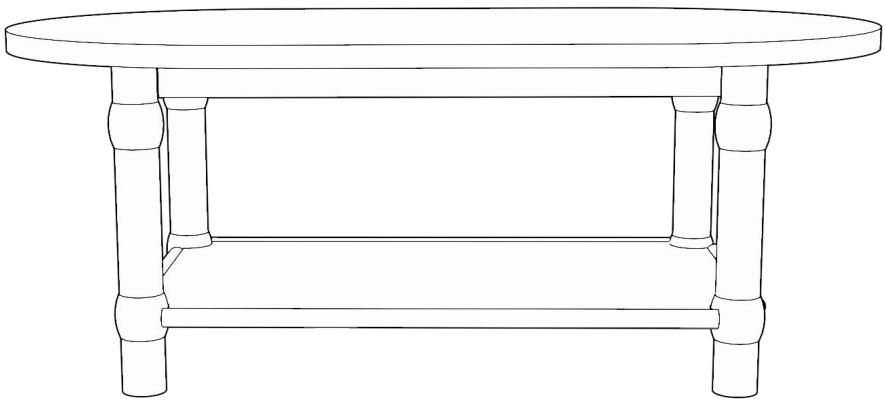
Turn the Coffee Table right side up.Your Coffee Table is ready for use. Caution: This Coffee Table can only be used on a flat, level surface.	