DREAMS IDEA

Instruction Manual



DREAMS IDEA

NO.14631&14641

ASSEMBLY INSTRUCTIONS

Tel.+1-562-510-9089

E-mail:support@dreamsidea.com

https://www.dreamsidea.com

EXPLODED VIEW

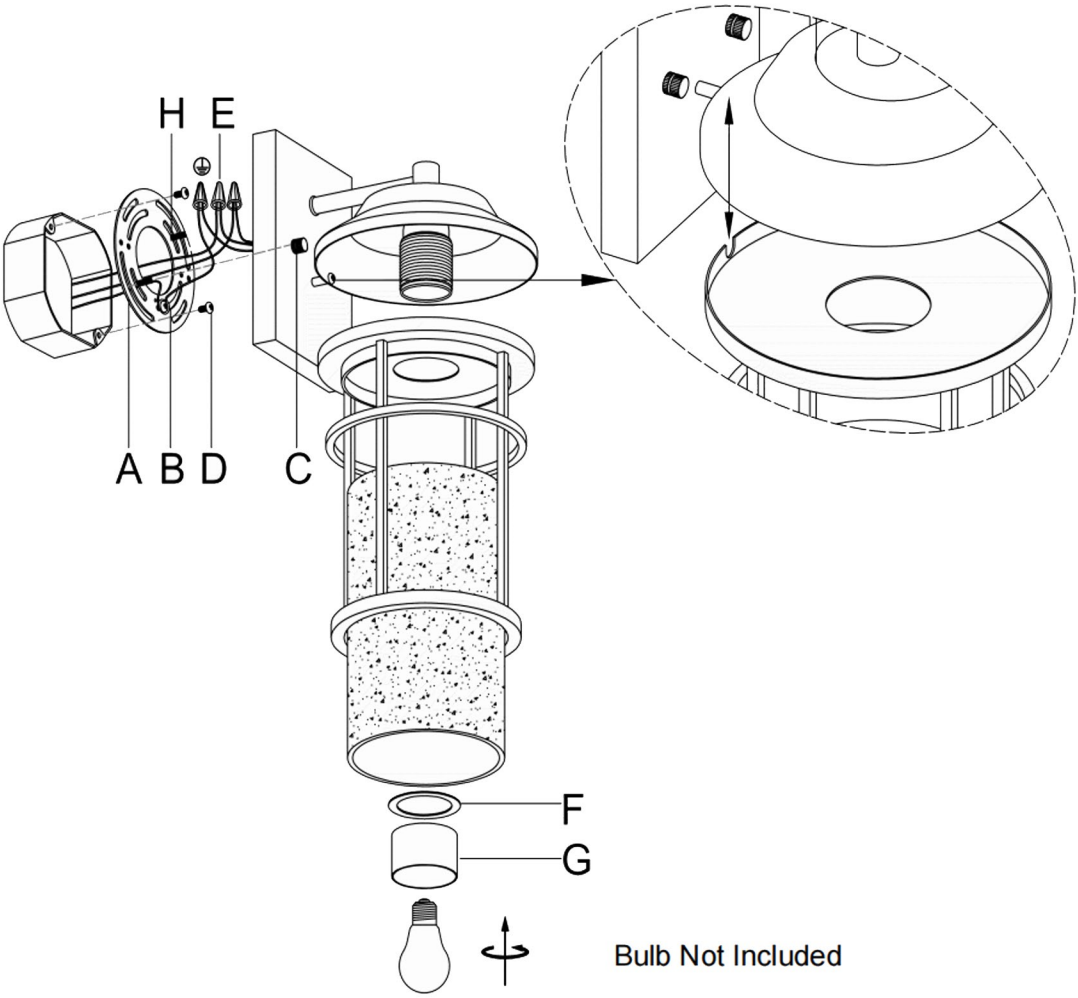

PARTS

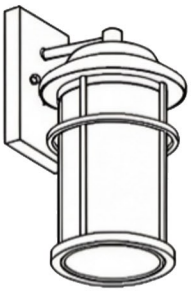

Fixtue

A



MountingUnit

B

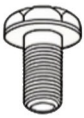

Screws

C



Nut x2

D



MountingScrews

E



WireNuts

F



Sheet iron

G



Iron hoop

H

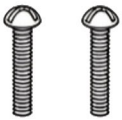

Screws 2

(The Socket Ring (F) and iron hoop (G) has already been installed in the position shown.)

ATTENTION

Please inspect the wires
before installation, if the wire
shows any cut or abrasion,
or has exposed copper wires,
DO NOT use the fixture,
it might be caused during
transportation or defect product.

Before starting installation of
the fixture, please remove the
previous fixture (if any).
Disconnect the power by
turning off the electric break
for your property
(Please ask for professional
help if needed).

MAINTAINANCE AND WARNING

Verify the lamp model suits the environment (indoor/outdoor, IP rating) and check all accessories (body, screws, cord, manual).

Only use with bulbs of the recommended type and wattage. Exceeding the maximum wattage may cause overheating or fire.

Do not install the fixture if any part is damaged or missing. Contact the manufacturer or seller for replacement parts.

The fixture may become hot during use. Allow to cool before handling.

Clean dust accumulation in recessed lamps regularly (to prevent overheating), but only when powered off; never rinse with water.

If the fixture includes a dimmer switch, ensure it is compatible with the fixture before installation.

Do not modify the fixture in any way; tampering with electrical components can result in malfunction or risk of fire.

TOOLS REQUIRED



Ladder



Safety glasses



Electrical tape



Phillips screwdriver



Flat blade screwdriver



Pliers



Wire strippers

step 1

Unscrew the ball nuts from the mounting unit.
Use the mounting screws to attach the mounting unit to the junction box.

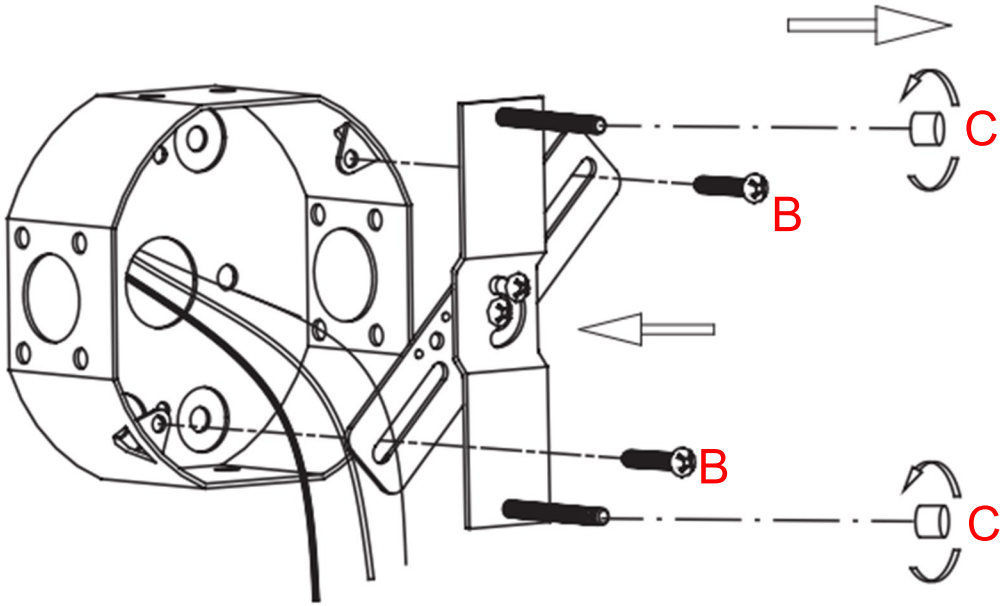

step 2

Make the electrical connection from the junction box to the fixture.Connect the ground wire to the mounting unit using the preinstalled green ground screw. Then, connect the positive, negative and ground wires with the supplied wire nuts. Secure with electrical tape.

Connect Clear, Brown, Gold or Black Parallel Wire without tracer (round & smooth) or Black Fixture Wire to:	Connect Clear, Brown, Gold or Black *Parallel Wire with tracer (square & ridged) or White Fixture Wire to:
Black or Red Supply Wire or Insulated Wire (other than green) with copper conductor.	White Supply Wire or Insulated Wire (other than green) with silver conductor

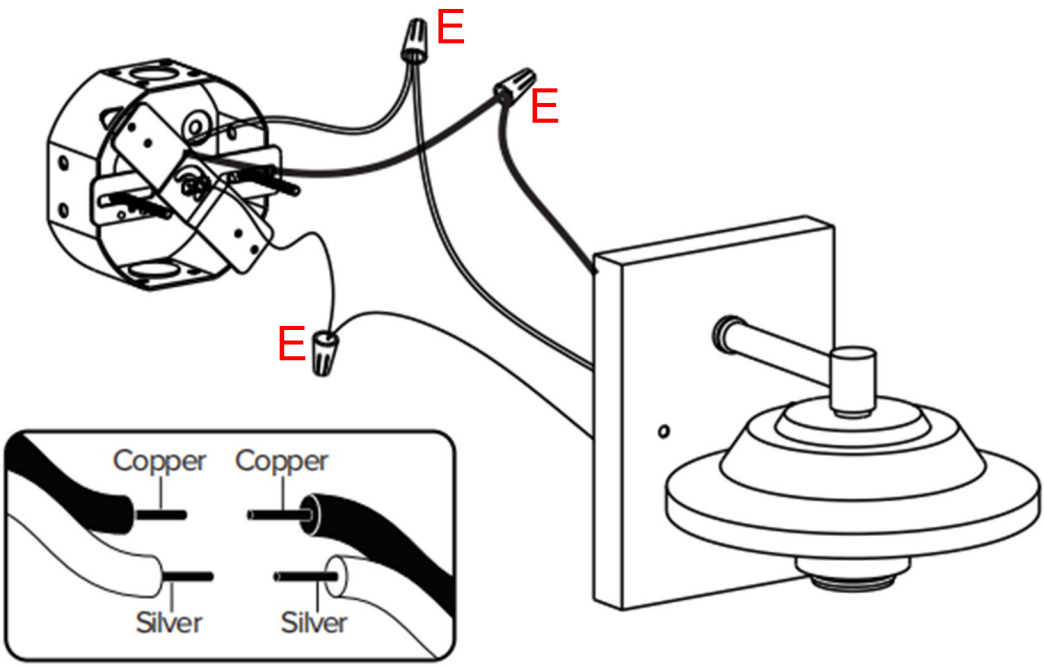

step 3

Attach the fixture to the mounting unit through screw holes as shown, and secure it with rubber rings and ball nuts.

NOTICE: Please use caulk in the back plate and wall mounting surface to prevent water from entering.

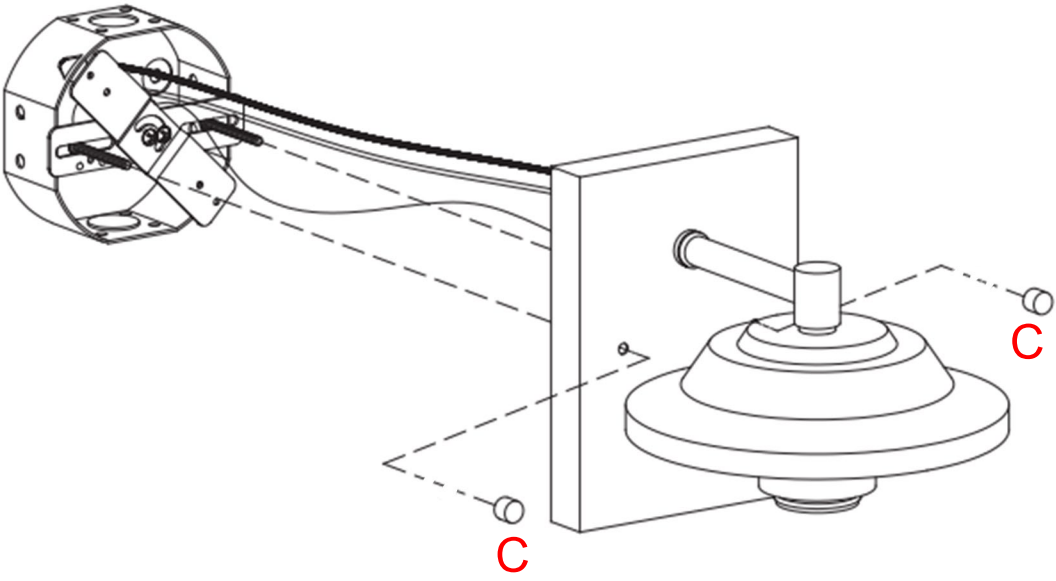

step 4

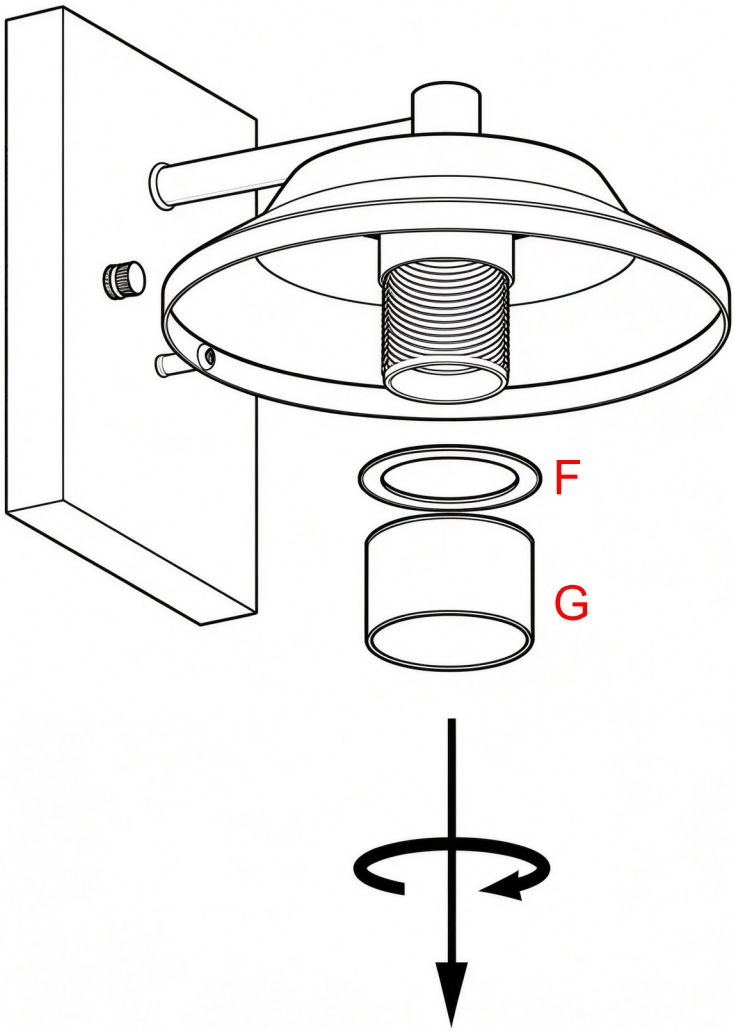

step 5

Remove the socket ring from the socket.

Attach the glass shade and cage onto fixture using socket ring.

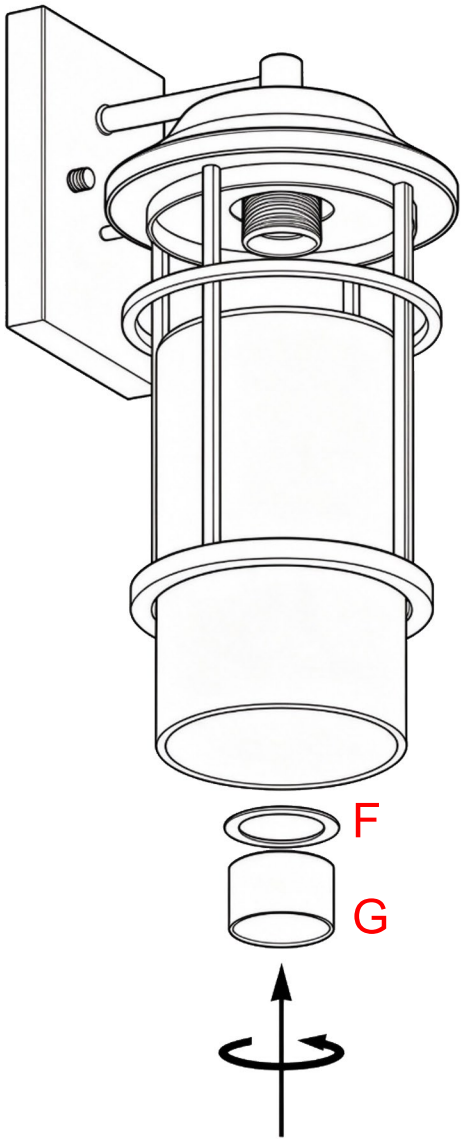

step 6

Install bulbs (not included).

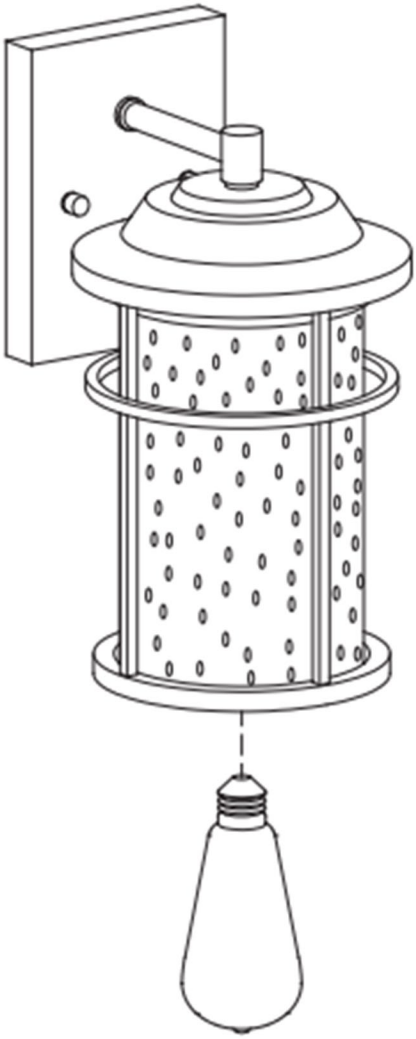

Product Overview



14631

14631-S



14631-PC

14631-S-PC



14641



14641-PC