ASSEMBLY INSTRUCTIONS

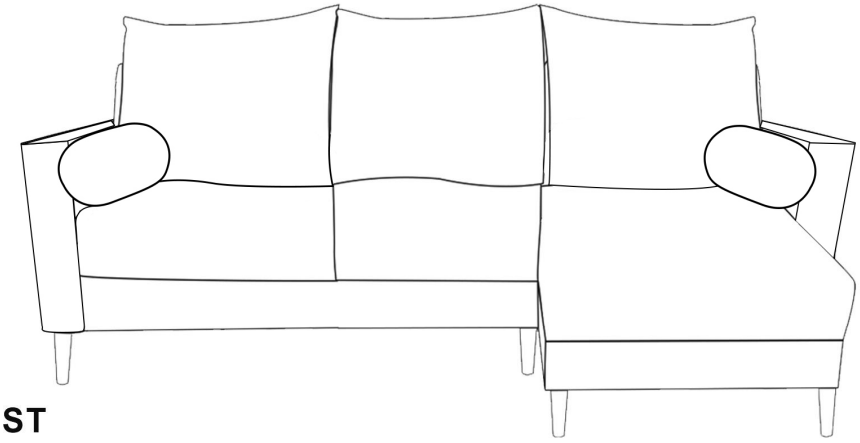

PARTS LIST

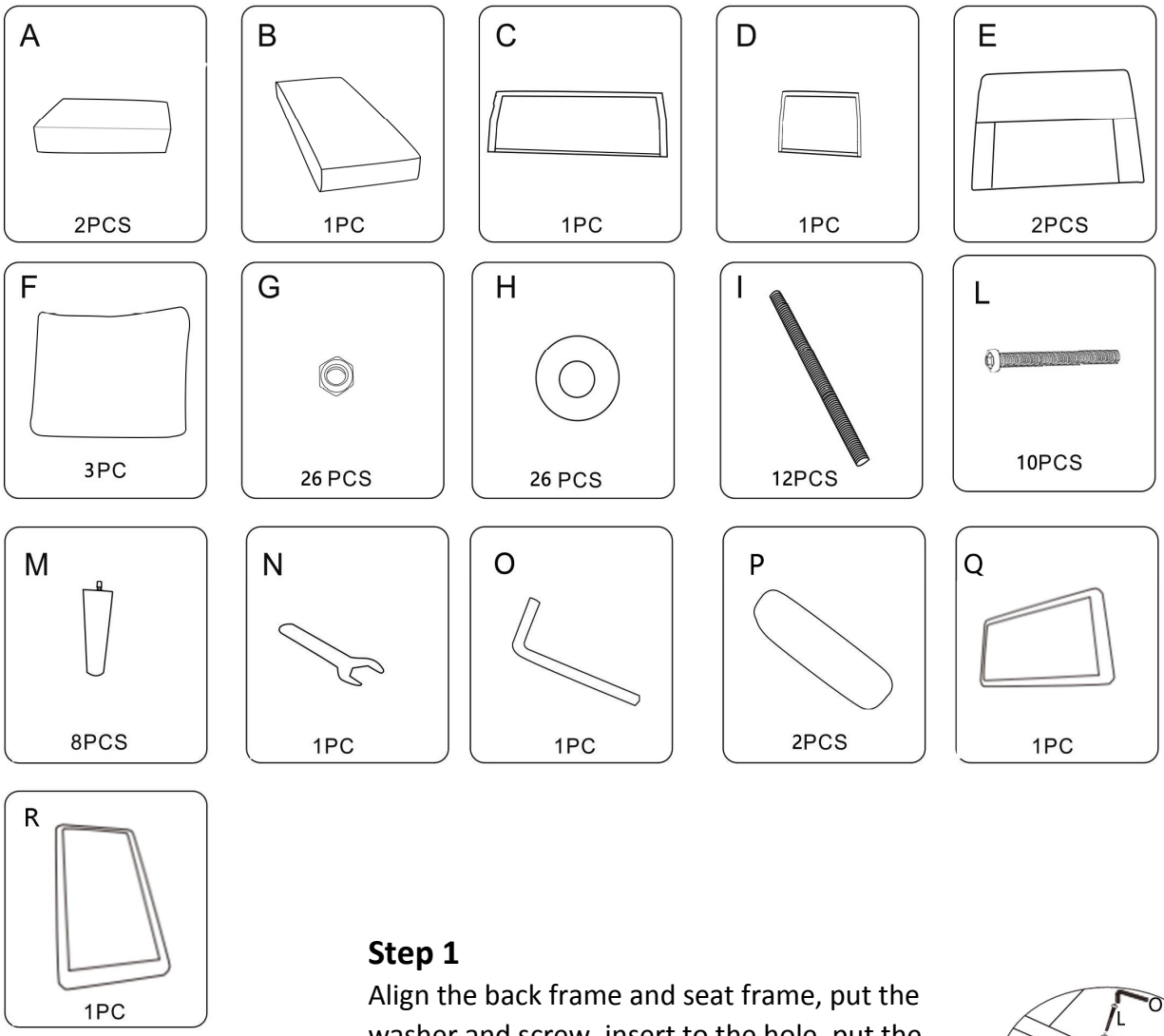

Step 1

Align the back frame and seat frame, put the washer and screw, insert to the hole, put the washer and tighten nut with wrench

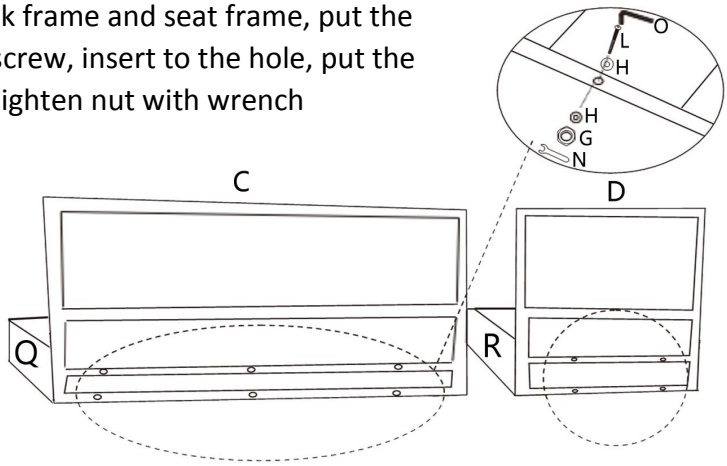

Step 2

Screw into arms about 2cm, Insert the arm with screws on into the side of seat frame.

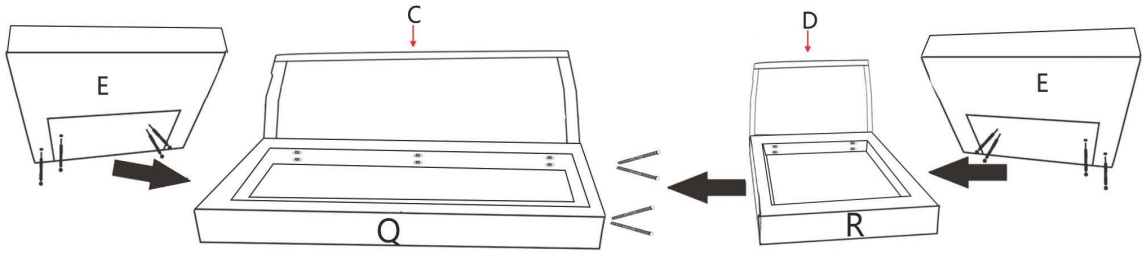

Step 3

Put the washers, then tighen the nuts with wrench from inside to fix the arms.

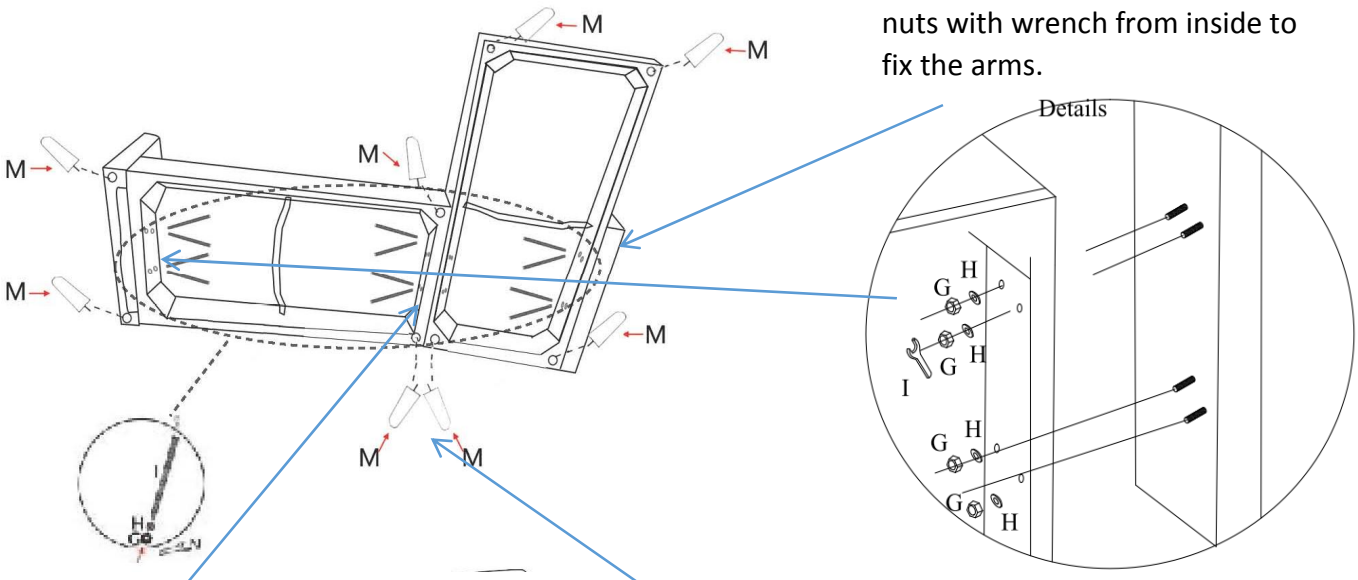

Step 4

Connect the sofa and chaise, put the washer, insert the screws and tighten the nut at both side.

Step 5

Assemble the legs

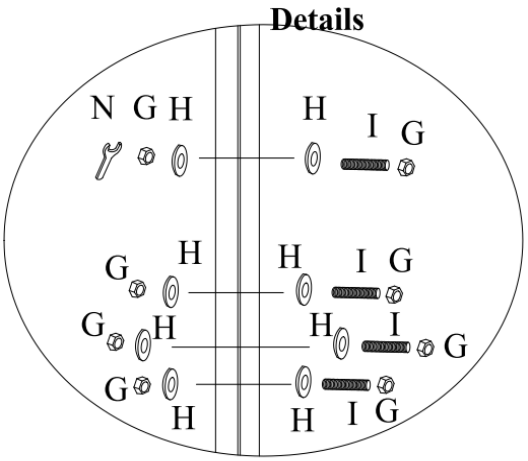

Step 6

Put upright the sofa.

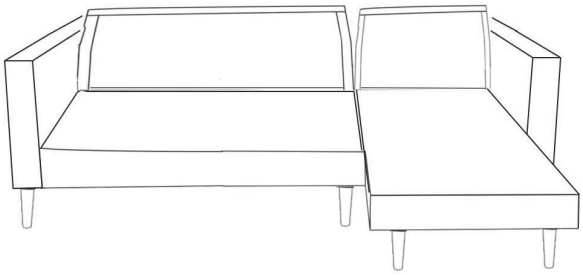

Step 7

Put the cushions on sofa

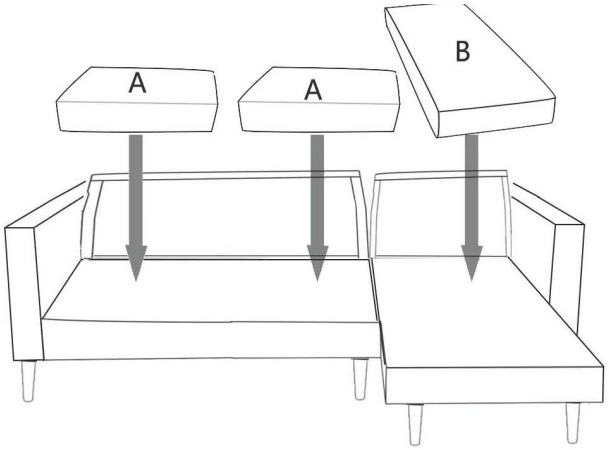

Step 8

Put the back cushions and pillows on sofa

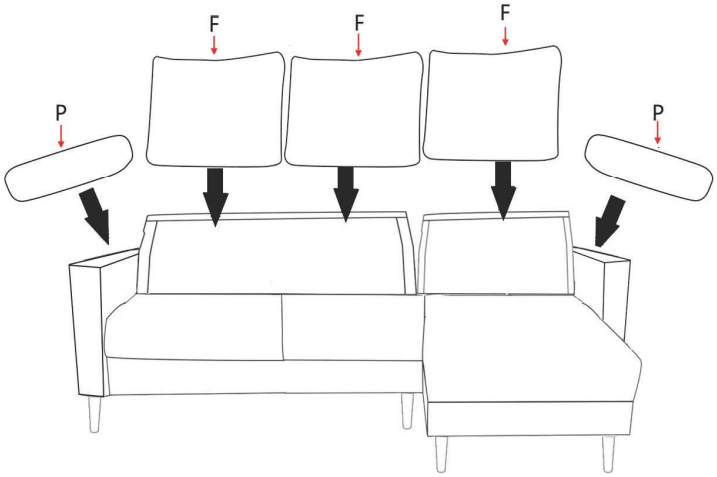

Step 9

Assembly is finished.

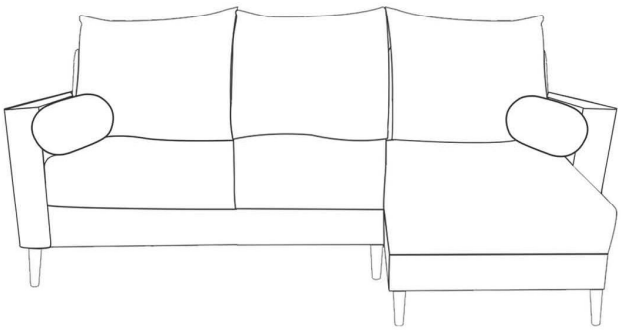

TIPS:

1, Please do not open the compress packaging until your sofa frame is completely assembled.

2, Compress cushions or pillows need to fully fluffed within 72 hours for your perfect use.

3, Please keep children away from plastic bag or any small pieces of stuff.

4, After assembly is completed, don't forget to pat the back cushions and seat cushions, make them recovering better. And wait 72 hours for fully rebound.

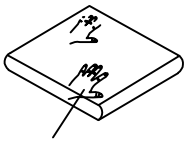

Pat and tidy the cushions

5, Cushions should be regularly maintained for perfect use.

STEPS for compressed pack:

(1)open the carton -- (2) take out the compressed pack -- (3) cut from edege and take out the cushion -- (4) Put the cushion on floor -- (5) Pat and tidy the cushion --(6) Wait to rebound completely after 72 hours.

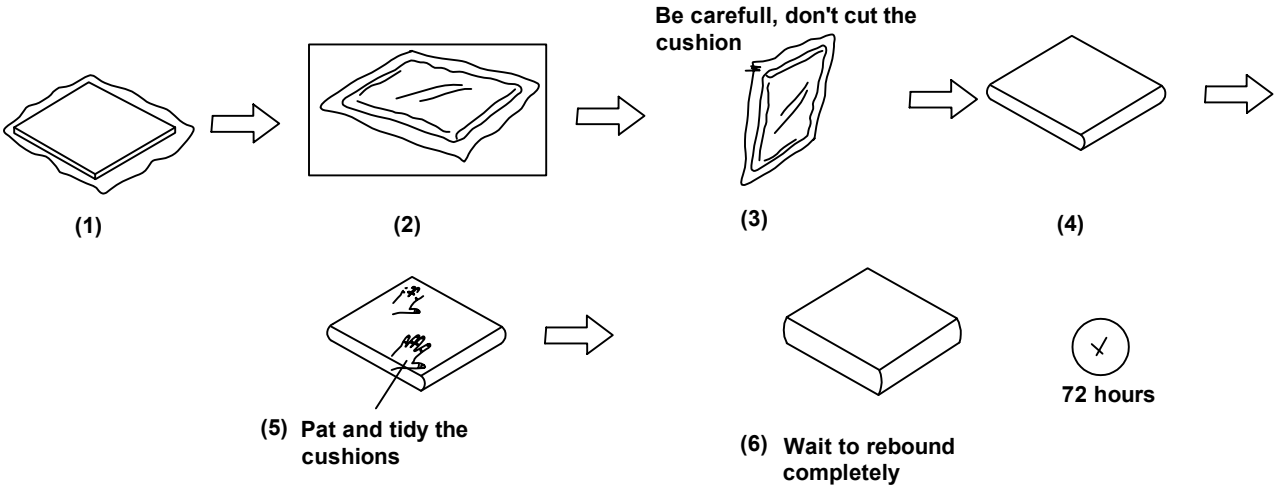

CAUTION:

PLEASE DO NOT OPEN COMPRESSED PLASTIC CUSHION BACK UNTIL YOUR SOFA FRAME IS COMPLETELY ASSEMBLED, OTHERWISE, IT CAN'T BE REPACKED IN ORIGINAL PACKING WAY TO RETURN.