INSTRUCTIONS MANUAL

PATIO WICKER SWIVEL CHAIR AND SIDE TABLE

Loosely assemble before tightening.

IF YOU PURCHASED THE CHAIR AND TABLE ONLINE AND HAVE ANY QUESTIONS OR CONCERNS
PLEASE CONTACT US

Warning:

1. Very important!

After receiving the product, please check if all parts are intact.

Do not open the vacuum-sealed packaging of the cushion immediately.

Only proceed with opening the packaging if you are satisfied with the product.

2. When unpacking the box, please use tools carefully to avoid scratching the cushion.

Note: Since the cushion is vacuum-packed, if you are not satisfied with the product after opening, it may affect the after-sales process.

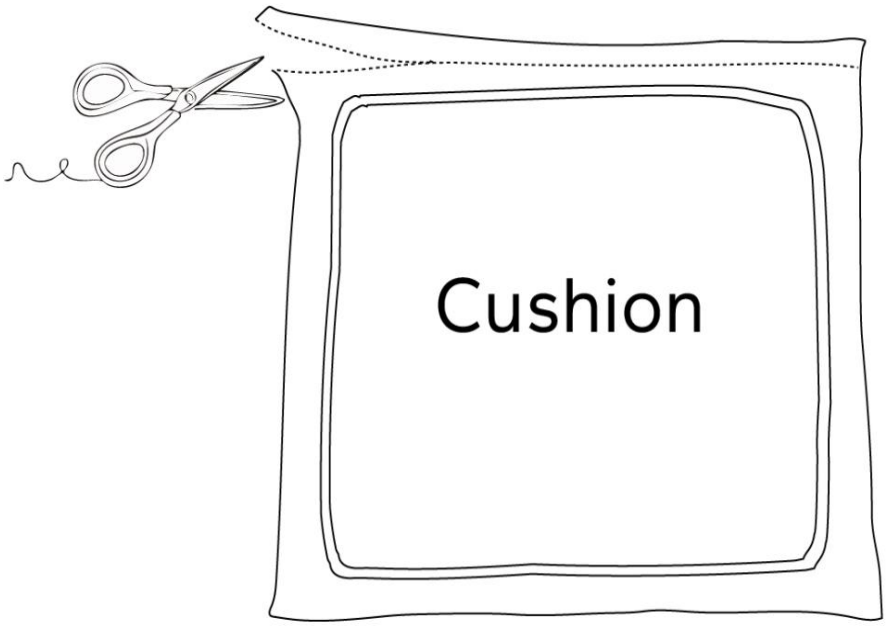

Warning and Cautions:

Thank you for choosing our furniture. Please read and understand this entire manual before attempting to assemble or install the product.

GENERAL BEST PRACTICES FOR ASSEMBLY

1. Familiarize yourself with the product and check all parts against the packing list. If any Parts are missing or damaged, do not install. Contact us immediately.

2. Some parts may contain sharp edges. Wear protective gloves, if necessary, during assembly.

3. Check all nuts and bolts periodically for tightness and, when required, tighten them again.

4. Pay attention to the parts orientation.

5. Save all packing materials until assembly is complete to avoid accidentally discarding smaller parts or hardware.

IMPORTANT

●Make sure to place the washer on the bolt before inserting it into the bolt hole.

●To ensure the best fit, assemble loosely before tightening.

●Tighten all bolts after all parts are assembled.

WARNINGS

⚠ **Keep children and pets away from the working area during assembly and adjustments.**

1. Keep the assembly area at least 6 feet from any obstruction, such as a fence, garage, house, overhanging branches, laundry lines, or electrical wires.

2. When assembling and using this product, always follow basic safety precautions to reduce the risk of personal injury and product damage. Please read all instructions before assembly and use.

3. Check all bolts for tightness before use. IMPORTANT - check and tighten bolts often to keep them secure!

4. The chair and table are not to be used for standing purposes and will not function as a stool or step-ladder. Use on even surfaces only.

5. The chair supports a weight of 300lb (136.4 kg), the table supports a weight of 70lb (31 kg). Improper use of this product or failure to use it as directed may result in injury. Not intended for commercial use.

WARRANTY

•WHAT IS COVERED?

•The limited warranty is extended to the original purchaser and covers material and manufacturing defect, provided the item is properly maintained and used for personal residential purposes only.

•Warranty: 180 DAYS.

•Lost Accessories or Parts Policy: Costs for lost accessories or parts will be charged after 90 days from the date of purchase.

MAINTENANCE

•**STAIN RESISTANT CUSHIONS CARE:** Keep cushions in storage on rainy days.

•**SPILLS:** Immediately wipe up spills using a white damp cloth. Repeat if necessary until the stain is gone. Allow cushions to air dry.

• **FABRIC CARE:** Hand wash with cold water, non-chlorine bleach when needed, and lay flat to dry. Cool iron if necessary. Do not dry clean.

• RESIN WICKER PRODUCT CARE:

1. General Cleaning: Before use, clean the product with a soft, dry towel. When not in use, wipe off any dirt or loose debris. For regular cleaning, use a mild soap and water solution, rinse thoroughly, and dry completely.

2. Weather Protection: To prolong the life of your resin wicker, avoid prolonged exposure to intense sunlight or heavy rain. Whenever possible, use a protective cover when the furniture is not in use, especially during extreme weather conditions.

3. Avoid Harsh Cleaners: Do not use strong detergents or abrasive cleaners, as these may damage the finish.

•**Regular Maintenance:** Over time, nuts and bolts may loosen. Occasionally check and re-tighten them on all products as needed.

Assembly Instructions for 1PC Swivel Chair

A1	A2	B	C
1PC Left Arm	1PC Right Arm	1PC Chair Back	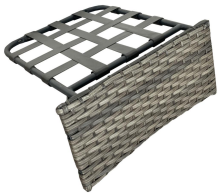 1PC Seat Panel

D	E	F	G
1PC U-shaped Fitting	1PC Chair Base	1PC Connecting Rob	1PC Connecting Rob

H	I	J	K
M6*15mm 9PCS Bolt	**M6*35mm** 14PCS Bolt	**Ø16*Ø6.5*1mm** 23PCS Washer	**M6** 8PCS Nut

L	M	N	O
M6 4PCS Spring Washer	1PC Allen Wrench	1PC Open End Wrench	1PC Seat Cushion
P	**Q**		
1PC Back Cushion	1PC Headrest		

1. Secure chair back (B) to left arm (A1) with 2 washers (J) and 2 bolts (H) by using allen wrench (M). Keep the bolts loose.

Note: The hole of chair arm must face inside of seat.

H		M6*15mm	2
J		Ø16*Ø6.5*1mm	2

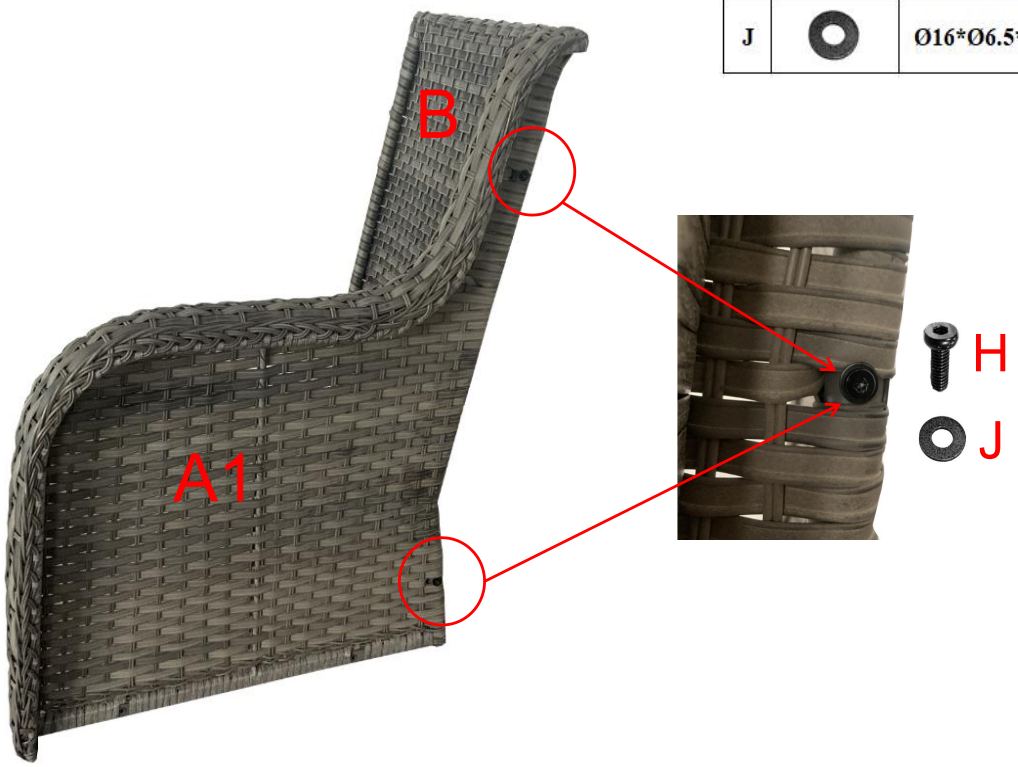

2. Secure chair back (B) to right arm (A2) with 2 washers (J) and 2 bolts (H) by using allen wrench (M). Keep the bolts loose.

Note: The hole of chair arm must face inside of seat.

H		M6*15mm	2
J		Ø16*Ø6.5*1mm	2

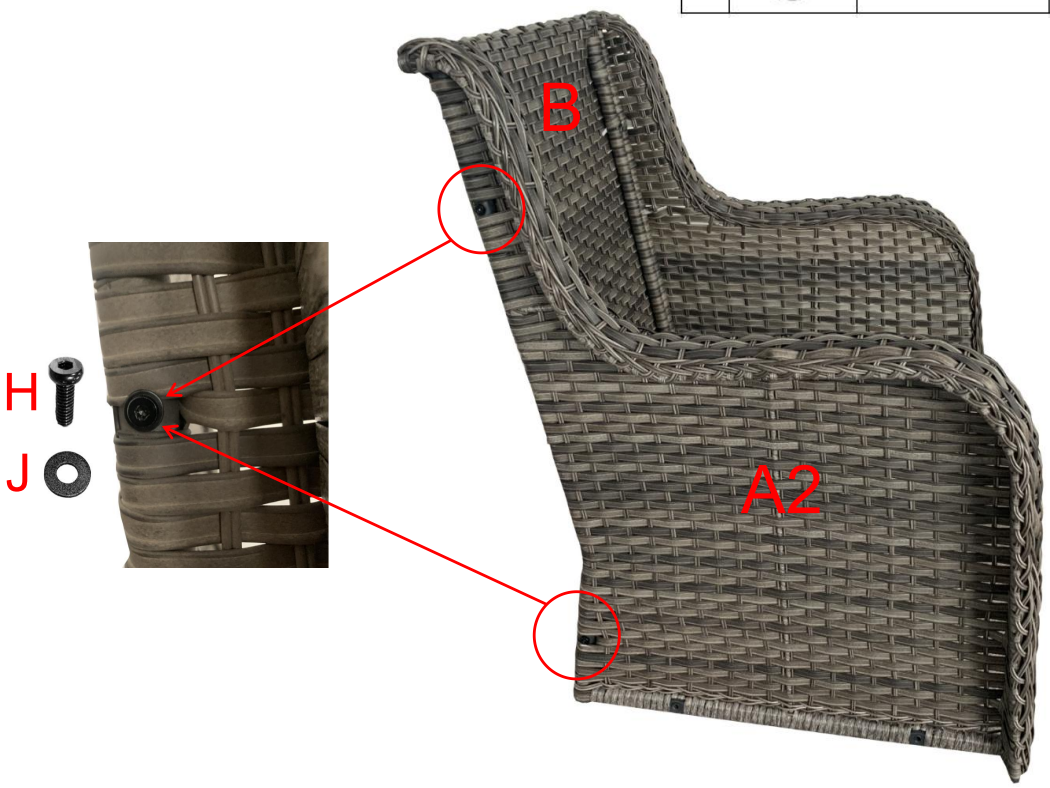

3. Secure seat panel (C) to assembled chair arms (A1&A2) with 4 washers (J) and 4 bolts (I) by using allen wrench (M). Keep the bolts loose.

I		M6*35mm	4
J		Ø16*Ø6.5*1mm	4

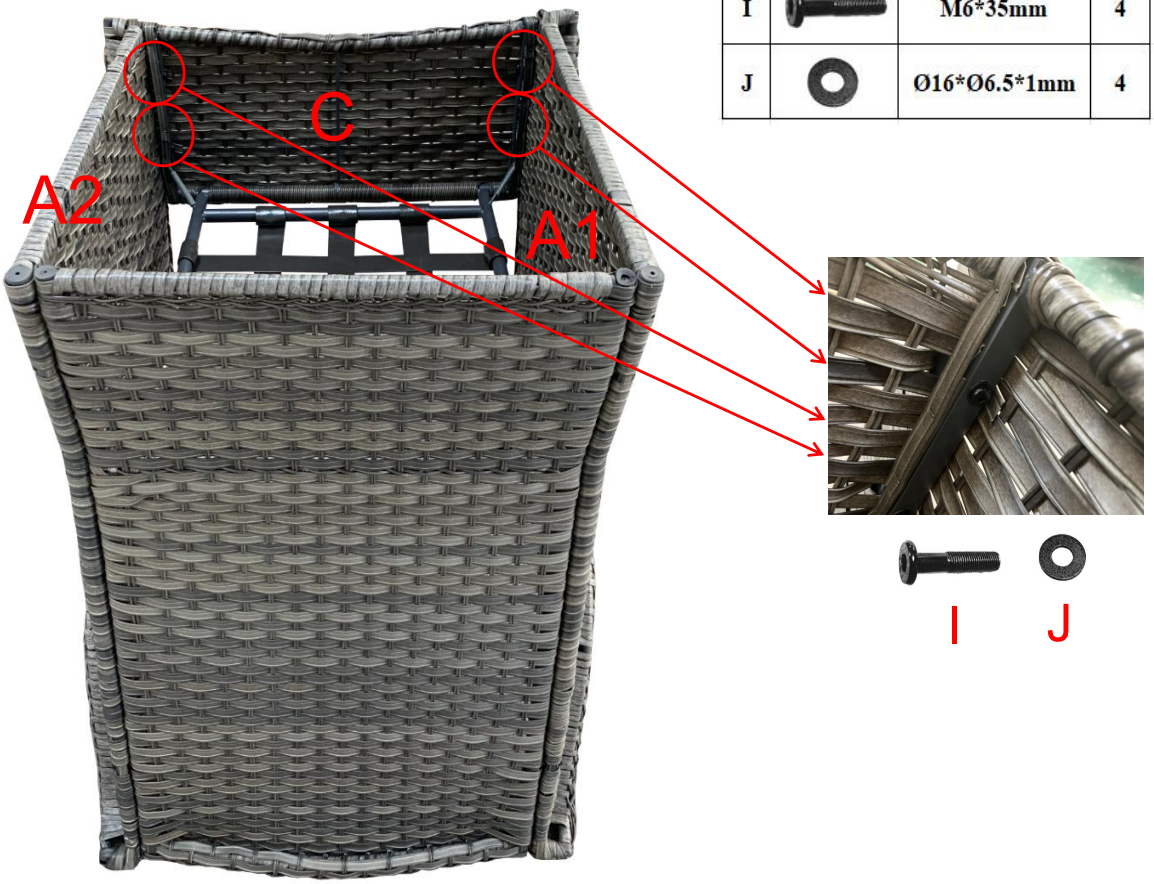

4. Secure assembled seat panel (C) to assembled chair back (B) with 2 washers (J) and 2 bolts (I) by using allen wrench (M). Keep the bolts loose.

I		M6*35mm	2
J		Ø16*Ø6.5*1mm	2

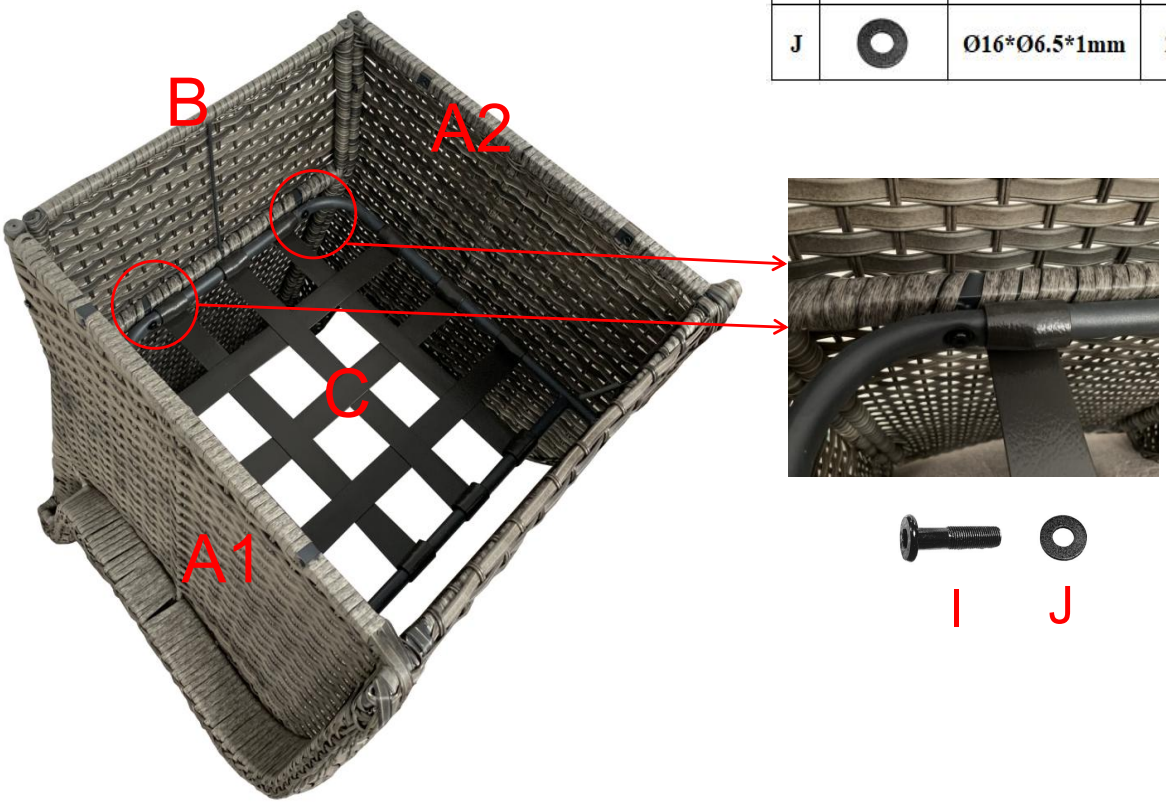

5. Secure connecting rob (F) to chair base (E) with 2 washers (J) and 2 bolts (H) by using allen wrench (M). Fully tighten 2 bolts (H).

H		M6*15mm	2
J		Ø16*Ø6.5*1mm	2

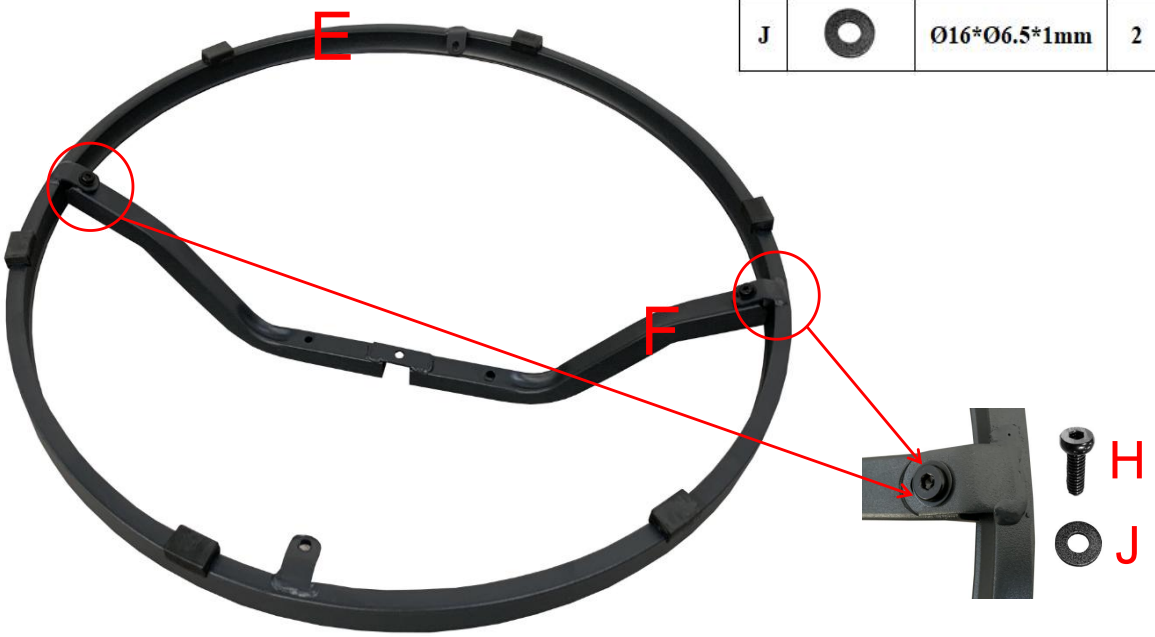

6. Secure connecting rob (G) to assembled connecting rob (F) and chair base (E) with 3 washers (J) and 3 bolts (H) by using allen wrench (M). Fully tighten 3 bolts (H).

H		M6*15mm	3
J		Ø16*Ø6.5*1mm	3

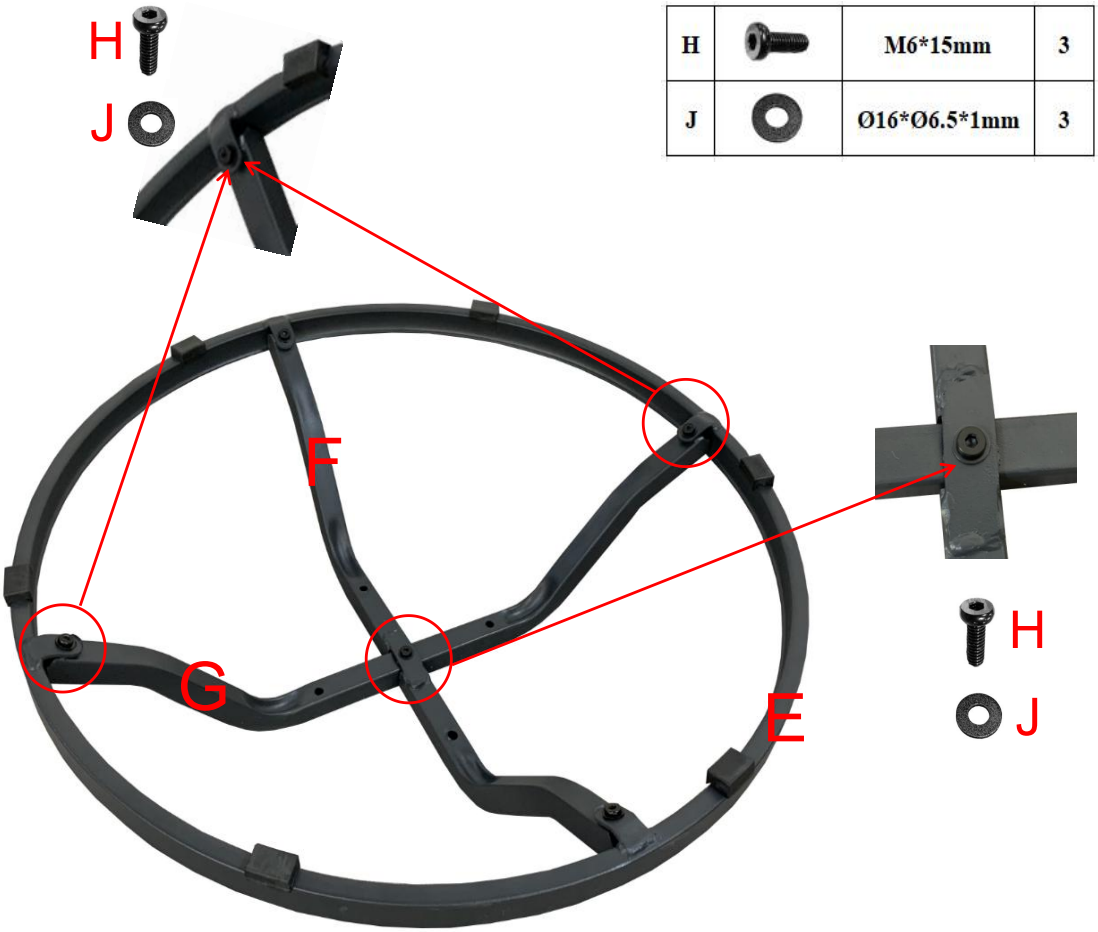

7. Secure assembled U-shaped fitting (D) to assembled arms (A1&A2) with 4 bolts (I) and 4 nuts (K) by using allen wrench (M) and open end wrench (N). Keep the bolts loose.

I		M6*35mm	4
K		M6	4

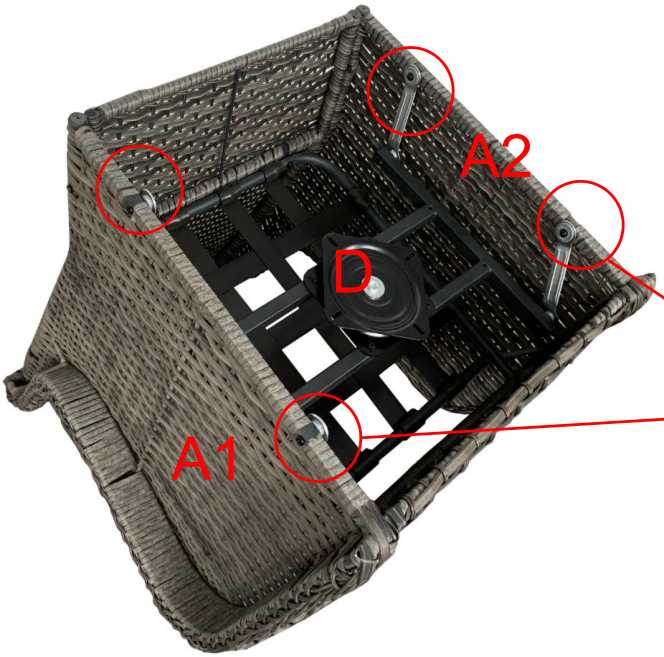

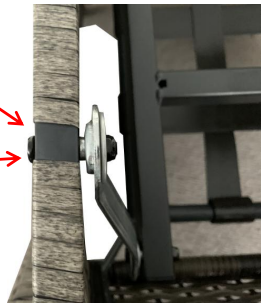

8. Secure assembled U-shaped fitting (D) to assembled connecting bars (F&G) with 4 bolts (I), 8 washers (J), 4 spring washers (L) and 4 nuts (K) by using allen wrench (M) and open end wrench (N). Fully tighten all bolts now.

I		M6*35mm	4
J		Ø16*Ø6.5*1mm	8
L		M6	4
K		M6	4

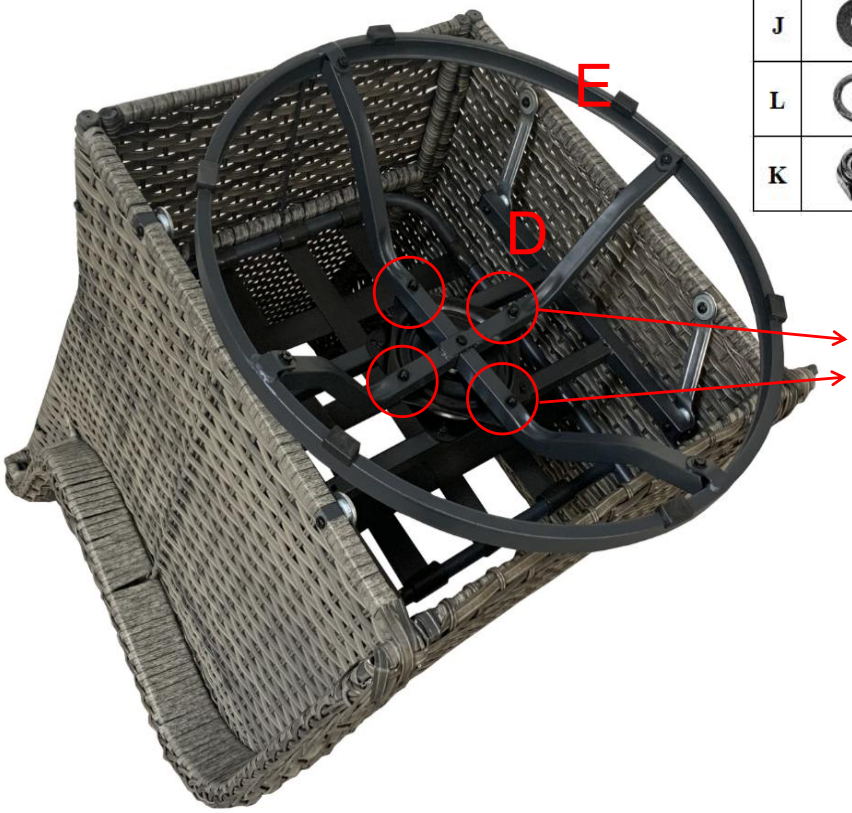

9. Tie headrest (Q) to back cushion (P), then put seat and back cushion (O&P) onto the chair, and it is ready to use now.

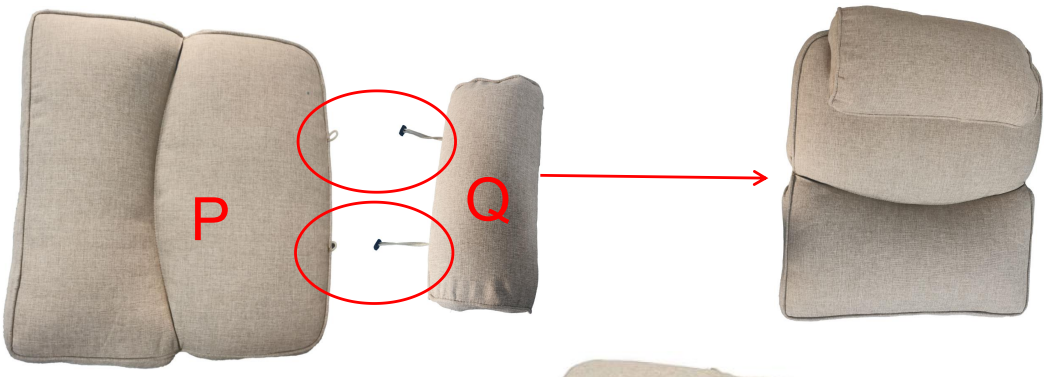

SPECIAL WARNING

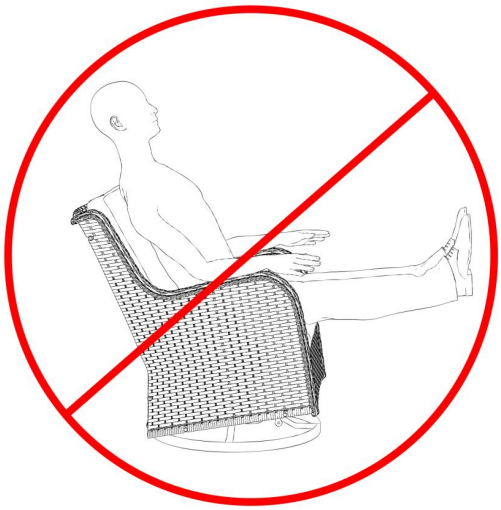

THIS CHAIR IS NOT A TOY.
DON'T OVER-SWING THE CHAIR.
OVER-SWING THE CHAIR MAYBE MAKE THE CHAIR TIP OVER AND RESULT IN INJURY.

DO NOT STAND ON THE CHAIR. ANY IMPROPER USE OF THIS PRODUCT MAY RESULT IN INJURY.

Assembly Instructions for 1PC Side Table

A	B	C	D
1PC Table Top	4PCS Table Leg	1PC Table Tray	M6*12mm 12PCS Bolt

E	F		
Ø16*Ø6.5*1mm 12PCS Washer	1PC Allen Wrench		

1. Secure table legs (B) to table top (A) by using 8 bolts (D) and 8 washers (E) with allen wrench (F). Keep the bolts loose.

D		M6*12mm	8
E		Ø16*Ø6.5*1mm	8

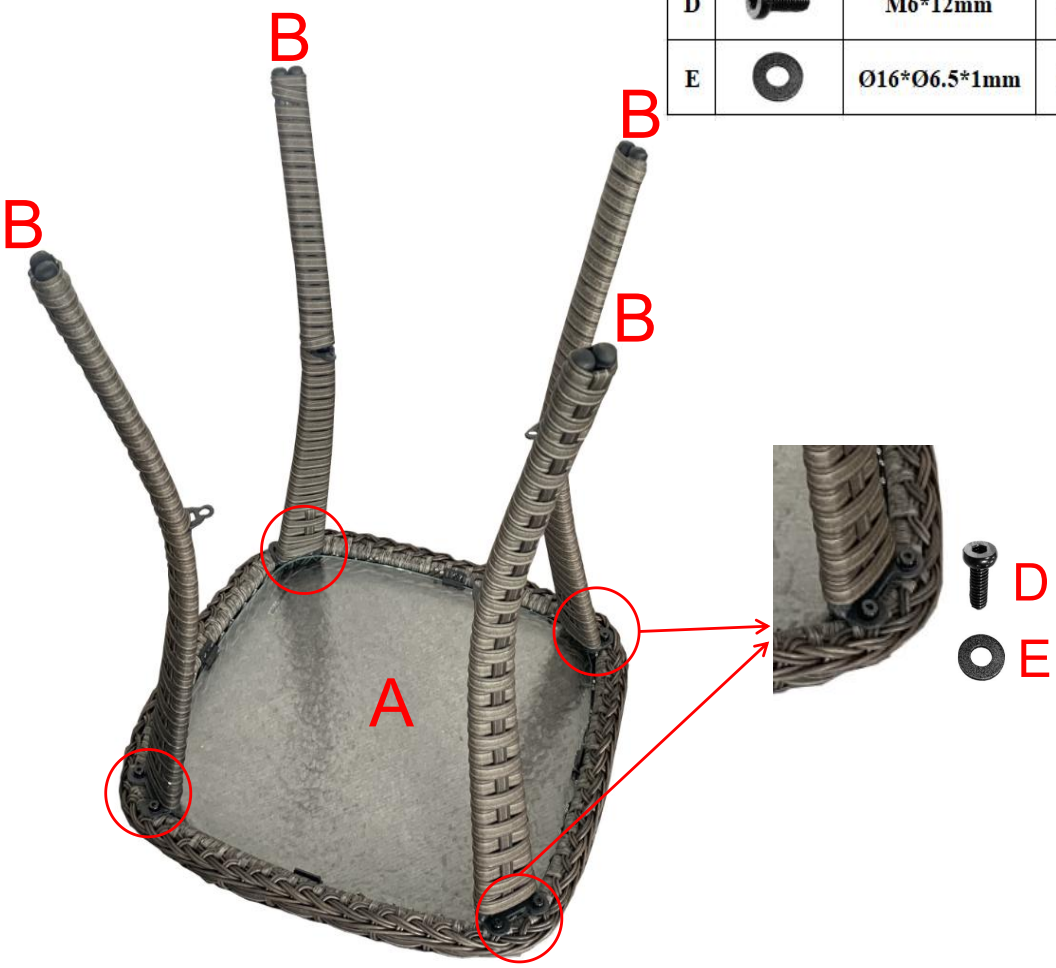

2. Secure table tray (C) to assembled table legs (B) by using 4 bolts (D) and 4 washers (E) with allen wrench (F). Fully tighten all bolts now.

Note: Do not tighten all bolts until all has been assembled.

D		M6*12mm	4
E		Ø16*Ø6.5*1mm	4

3. Roll over the table and it is ready to use now.