DATE:10/15/2026

IMPERIAL

SINCE 1955

Arden Air Hockey Table Assembly Instructions

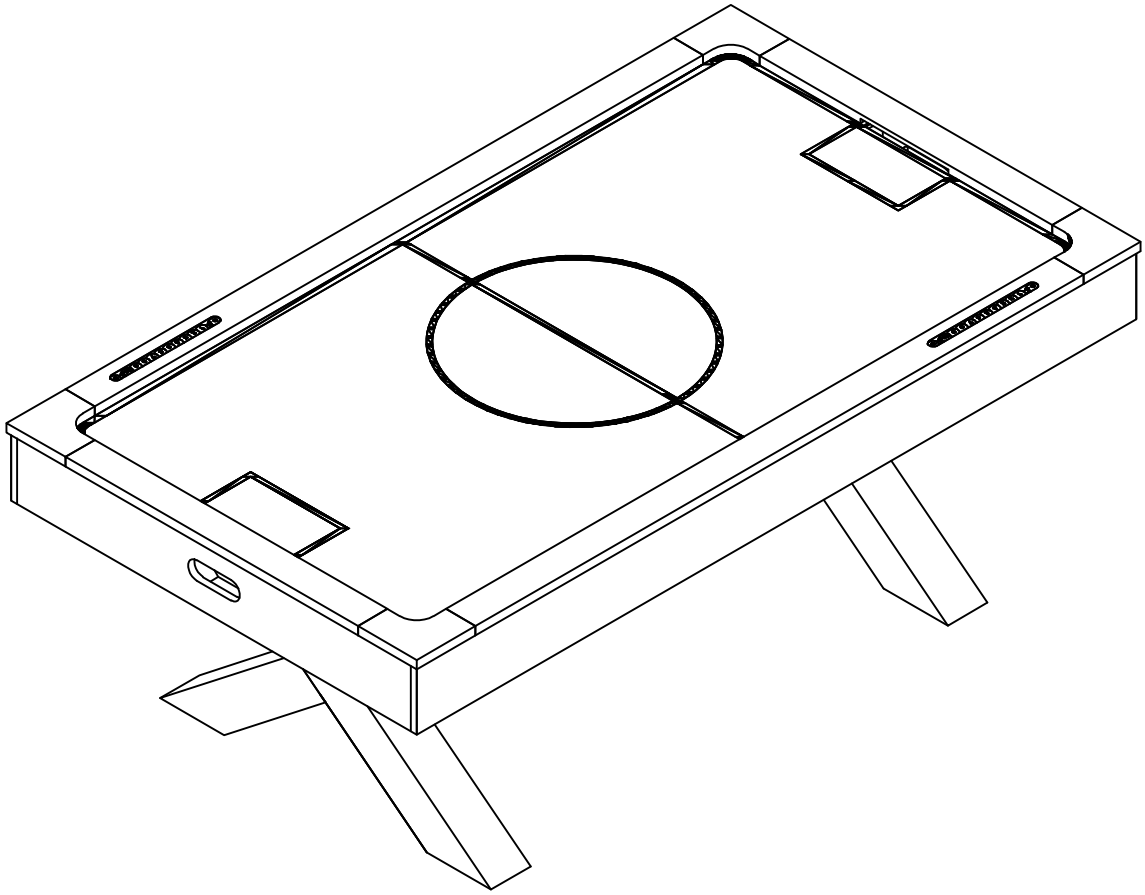

MADE IN CHINA

DATE:10/15/2026

IMPERIAL
SINCE 1955

Congratulations!

We hope you will have many hours of enjoyable use with your new Air Hockey Table!

Warning

Adult Assembly Required
Asamblea de adultos de advertencia necesaria

STOP

PLEASE KEEP YOUR INSTRUCTIONS!

- **Your Model number is necessary should you need to contact us. The model number for the Arden Air Hockey Table is 26-2650.**
- **Please read through this instruction book to familiarize yourself with all the parts and assembly steps.**
- **Refer to the Parts Identifier and verify that all parts have been included.**

WARNING!

This is not a child's toy. Adult supervision is required for children playing this game. Please read instructions carefully. Proper use of this set can avoid damage or injury.



BEFORE ASSEMBLY:

Verify that you have received one carton and inspect the Main Frame/Playfield for damage before beginning assembly.



TOOLS REQUIRED FOR ASSEMBLY:

- **Allen Wrench (included)**

ASSEMBLY INSTRUCTIONS:

- **Adult assembly is required. Due to the size and weight of this table, we recommend a minimum of two adults for assembly and additional adults when turning the table upright.**
- **Assemble the table upside down on a clean, flat, protected surface. The bottom carton may be used as a protective work surface to help prevent damage to the table finish.**

MADE IN CHINA

DATE:10/15/2026

Arden Air Hockey Table **Assembly Instructions**

Parts List

A 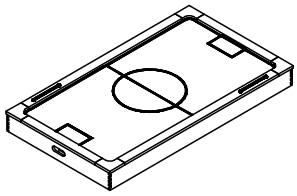 **Main Frame x1**	B 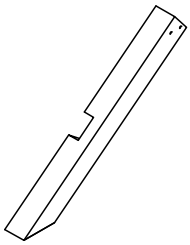 **Leg - A x2**	C 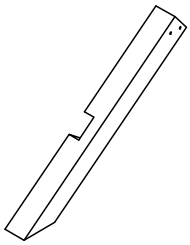 **Leg - B x2**	D 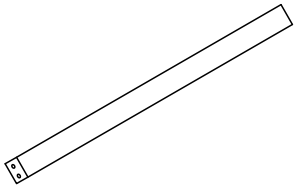 **Leg Connection x1**
E  **Wood Dowel x2**	#1 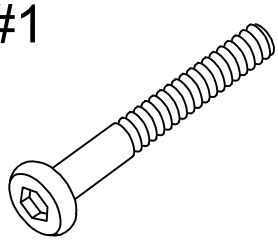 **Bolt 5/16"x3" x4**	#2 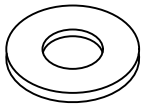 **Washer 5/16"x19mm x22**	#3 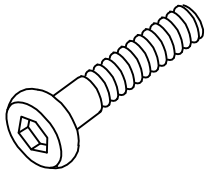 **Bolt 5/16"x1-1/2" x16**
#4 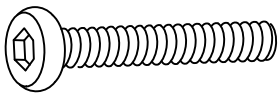 **Bolt 5/16"x2" x2**	#5 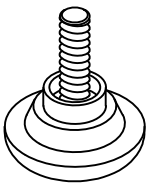 **Leg Leveler 5/16" x4**	#6 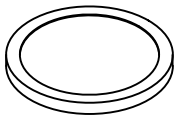 **Puck x4**	#7 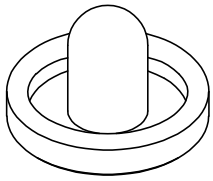 **Pusher x4**
#8 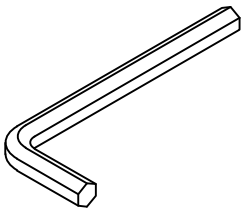 **Allen Wrench x1**			

MADE IN CHINA

DATE:10/15/2026

Arden Air Hockey Table **Assembly Instructions**

Step 1:

Attach Leg B (C) to Leg A (B) using Washers (#2) and Bolts (#1).
Tighten securely using the included Allen Wrench (#8)..

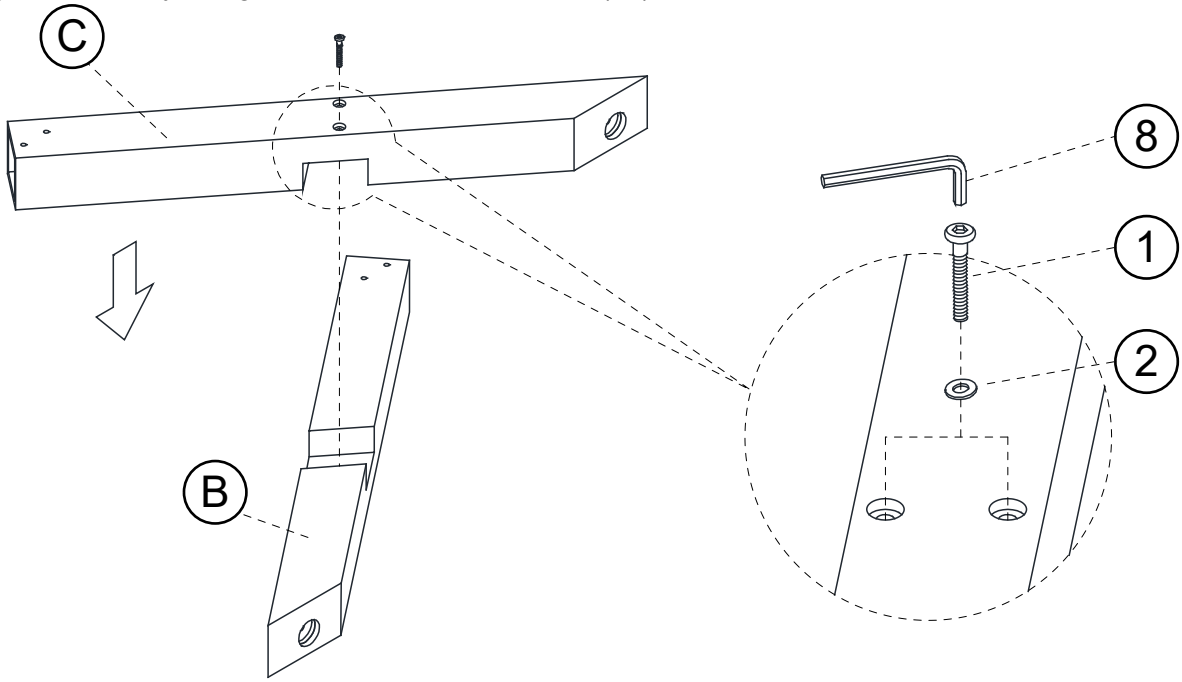

Step 2:

Attach the Leg Connection (D) between the leg assemblies using Wood Dowel (E) Washers (#2) and Bolts (#4). Tighten securely with the Allen Wrench (#8).

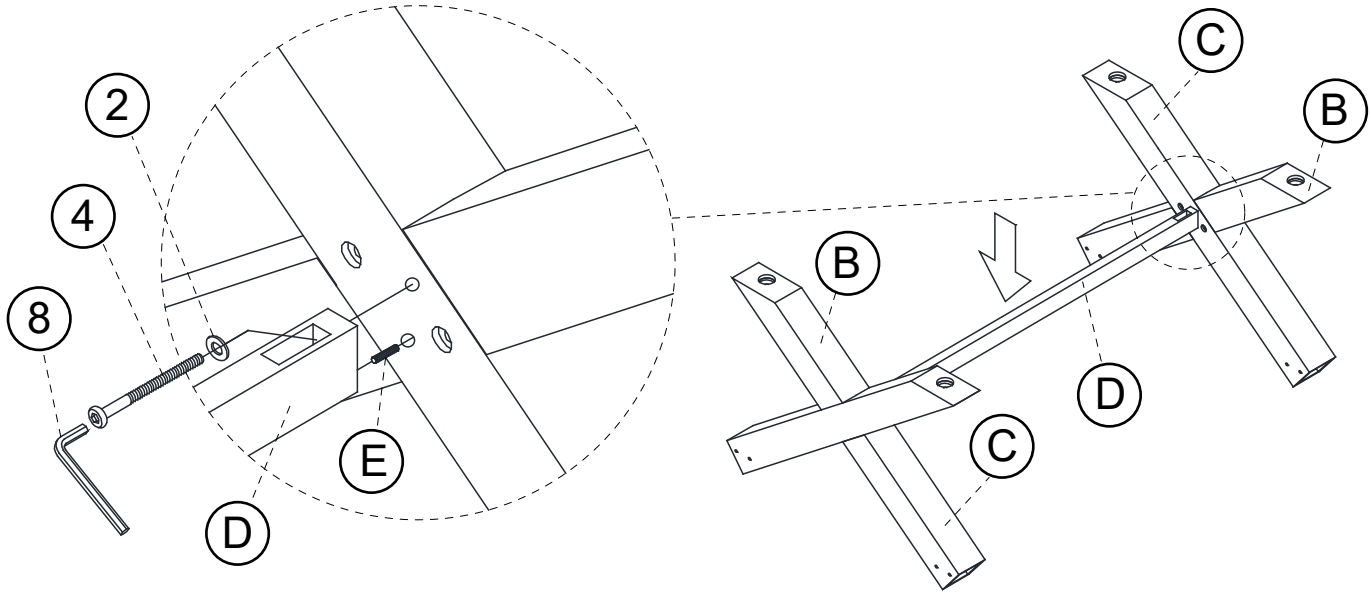

MADE IN CHINA

DATE:10/15/2026

Arden Air Hockey Table **Assembly Instructions**

Step 3:

With the Main Frame (A) positioned upside down on a clean, protected surface, attach both completed leg assemblies using Washers (#2) and Bolts (#3), as shown.Tighten securely with the Allen Wrench (#8).

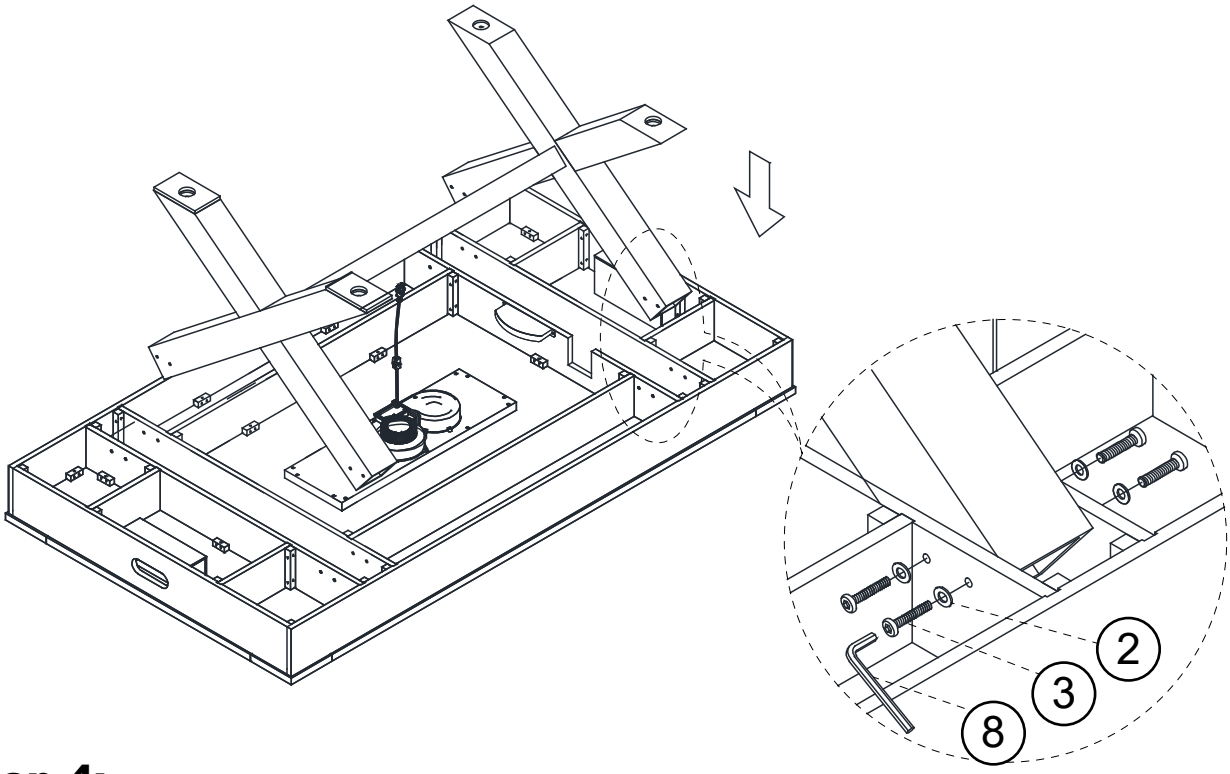

Step 4:

Install all Four Leg Levelers (#5).
Secure the power cord in the Power Strip Holder as shown.

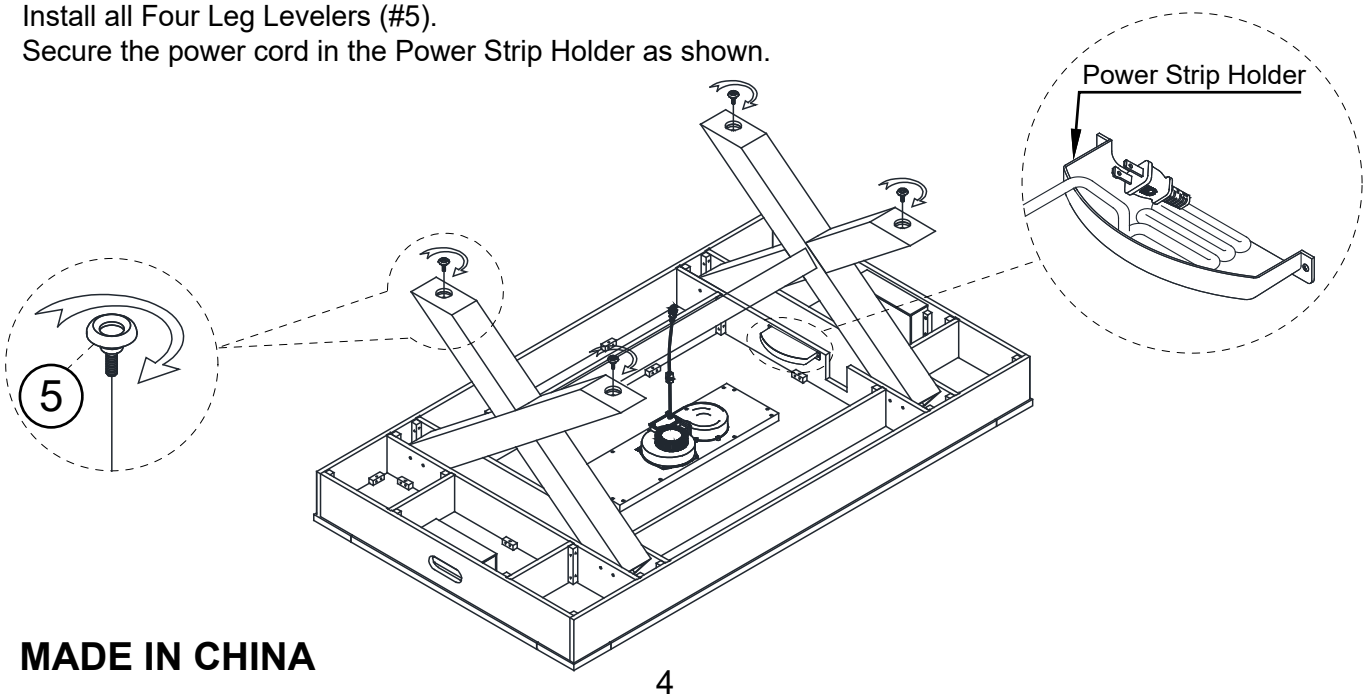

MADE IN CHINA

DATE:10/15/2026

Arden Air Hockey Table **Assembly Instructions**



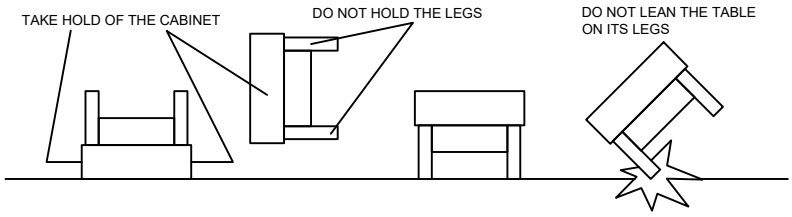

Step 5:

With the help of at least 2 adults, carefully lift and turn the assembled table upright. Always lift the table by the cabinet—never by the legs. Do not lean or pivot the table on its legs.

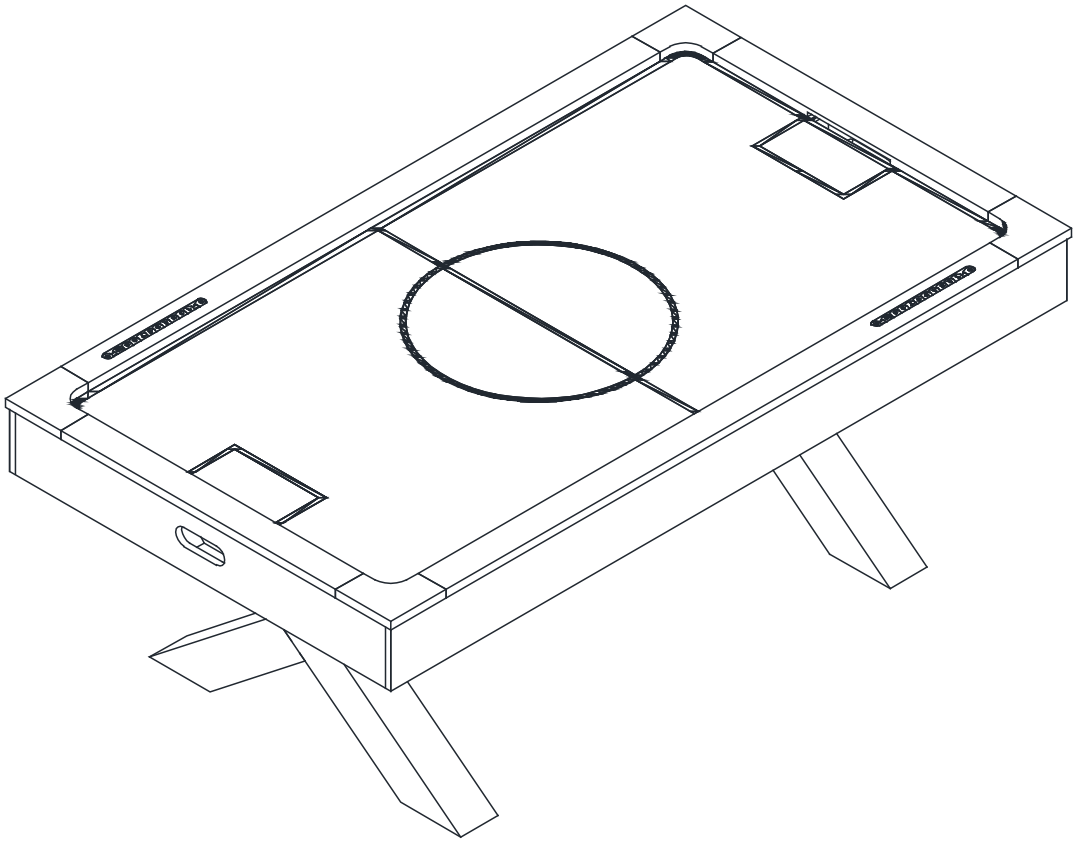

ENJOY YOUR NEW TABLE!
Assembly is complete!
We hope you enjoy many hours of fun with your new Arden Air Hockey Table.

MADE IN CHINA