canopy

Product ID. Q2RDP

Scan for Support
support@garvee.com

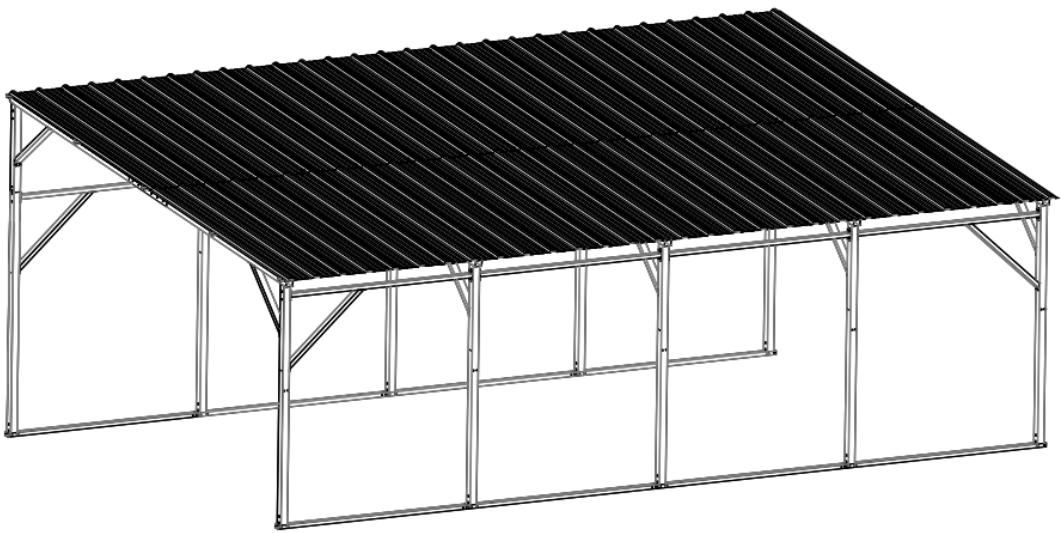

Distributed by
GARVEE.com

CONTENTS

01 HELP CENTER ---------- 1

02 WARNING ---------- 2

03 MATERIAL LIST ---------- 3-5

04 INSTALLATION STEPS ---------- 6-18

HELP CENTER

Question about your product? We're here to help. Visit us at:



Chat Support


Product Inquiry



Orders FAQ


Product Assembly


Returns & Refunds

We Stands Behind the Quality of Their Furniture

If you have any issues with your item please let us know! We will always do our best to come up with a solution that you will be happy with.Please get in touch with our customer service team before returning the product.And Please do not throw away the original box(es) if you have not finished assembling or comfirmed that there are no quality issues. Length of return period:

Items can be returned within 30 days of purchase.

In the meanwhile,everything you purchased from us comes with a one-year warranty.

Who is responsible for the retun shipping fee:

We will cover the return shipping fees if:

1. Your item has a manufacturing defect in its materials or workmanship.For example, tornwicker or misaligned screw holes.We will send you a prepaid shipping label after photos are sent.
2. Your item was damaged in transit.For example, glass is broken or wicker is damaged,We will send you a prepaid shipping label after photos are sent.
3. You receive the wrong box(es) due to a warehouse error. We will send you a prepaid shipping label after photos are sent of the wrong SKU numbers on the outer box(es).
4. One or more boxes are lost in transit. We will send you a prepaid shipping label if you no longer want the item.

* However, we still hope to work with you for a better solution instead of a retum. Please don't hesitate to contact our customer service team.

Customer will cover the return shipping fees if:

1. You don't like the product(s) after receiving the box(es).
2. You no longer need the product(s) but you have received the box(es),
3. You buy the product(s) by mistake but you have received the box(es).
4. Order/Shipment cancellation failed and you have received the box(es).

Return Request

In order to get a full refund as described in this return policy, all items must be:

(1) In a brandnew/unused condition, please provide photos before and after packaging.

(2) When returning, all accessories and parts are firmly packed in all original packaging. If your return does not meet the requirements, you may not get a full refund.
When will I be refunded?
The refund is released once the goods have been returned to our warehouse.
What if the product is damaged/defective outside of the valid return period?
We want you to be a happy customer. Please reach out to us by email and we will come up with a solution to make sure you are satisfied.

WARNING



1. Two or more people are required for assembly.
2. A ladder and electric drill may be necessary.
3. Do not erect the structure in heavy wind or inclement weather.
4. Do not leave up this unit for extended periods of time, as it is not a permanent structure or designed to withstand sustained wind or rain.It is a temporary, portable shelter that shields you from sunlight and rain. The screens also block flying insects.
5. Do not use candles, matches, or any open flame near the tent.
6. To better align the screws for practical situations, do not fully tighten screws initially.
7. Professional installation is highly recommended

- In case of windy weather, please do not stand in the gazebo.
- Please do not stand under the gazebo in case of heavy snowfall.
- For safety, please use expansion screw to reinforce the posts to the ground.
- In windy weather, please tighten the fence and netting to avoid tearing in high winds.
- In extreme weather condition, you can use a rope to pull the four corners of the gazebo to keep it stable.
- Please clear the snow off the roof in time for the heavy snowfall.
- Make sure all sciews are tightened before use.
- Check all screws, buckles and straps every 90 days.
- Please keep all screws loose during the assembly process and tighten them after completing the installation.
- Do not use or store next to a pole with open flame or flammable chemical.
- Please note that some parts have sharp edges and should be handled with gloves.
- If any parts are missing, broken, damaged or worn, stop using the product until repairs are made or factory replacement parts are installed.
- Installation of the product in a manner that does not conform to the manufaclurer's may result in the loss of the warranty policy for this product.
- Consult your local authorities to check if permits are required to erect the shed.

MATERIAL LIST

BOX A

#1	Leg pole 1		5 PCS
#2	Leg pole 2		5 PCS
#4	Reinforced plate		10 PCS
#16	Latch		10 PCS
#G3	M10x115 Expansion screws	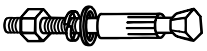	18 PCS
#G3a	M6x60 Expansion screws		12 PCS
#Y2	Anti-cut Tape		16m

BOX B

#7	Straight peak pole 1		5 PCS
#8	Straight peak pole 2		5 PCS
#15	Side-pole		8 PCS
#M	Gloves		2 pairs
#G1	M5X20 Self-Tapping screws		177 PCS
#G2	M6X20 Socket head bolt	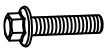	220 PCS
#G4	M6X70 Socket head bolt & Nut		39 PCS
#G5	M6X45 Socket head bolt & Nut		19 PCS

MATERIAL LIST

BOX C

#3	Leg pole 3		5 PCS
#5	Ground bar 1		2 PCS
#5a	Ground bar 2		6 PCS
#11	Internally reinforced pole		5 PCS
#12	Reinforced pole 1		5 PCS
#13	Reinforced pole 2	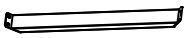	5 PCS
#14	Reinforced pole 3		4 PCS

BOX D

#9	Short Top-pole		10 PCS
#10	Long Top-pole		10 PCS

BOX E

#K	Roof cover		15 PCS

BOX F

#K	Roof cover		15 PCS

Tools Required

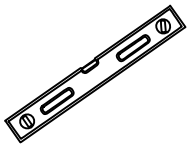		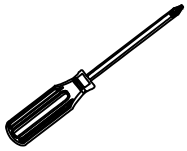	
LEVEL	RUBBER MALLET	PHILLIPS SCREW	DRILL
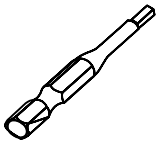			
ALLEN KEY	SAFETY HAT	GLOVES	STEPLADDER(6.5Ft or More)
			
SAFETY GLASSES			

Matters needing attention

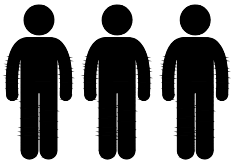	**Three or more people are required for assembly**		**Do not fully tighten screws prior to complete assembly**

STEP1 Assemble the Top Frame

#4		X10
#7		X5
#8		X5
#11		X5
#G4		X30

Notice:
The linking screws in this step are all:Socket Head Bolt(#G4)

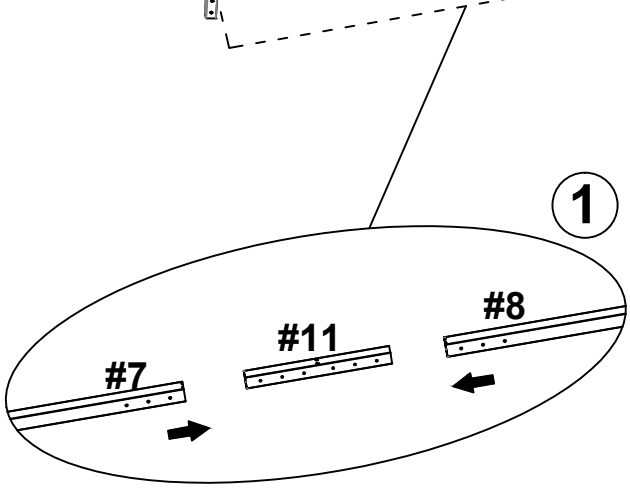

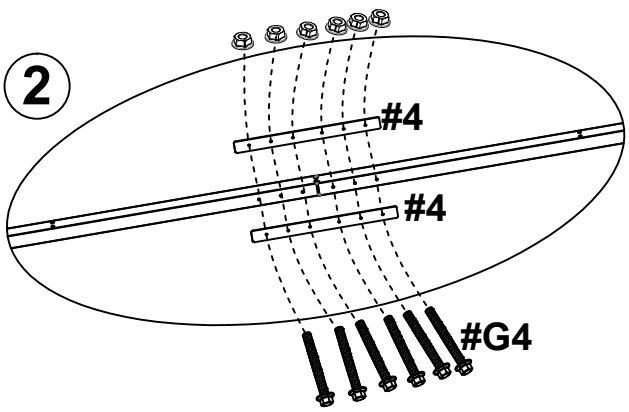

STEP2 Install the Top-pole

#9		X10
#10		X10
#G2		X40

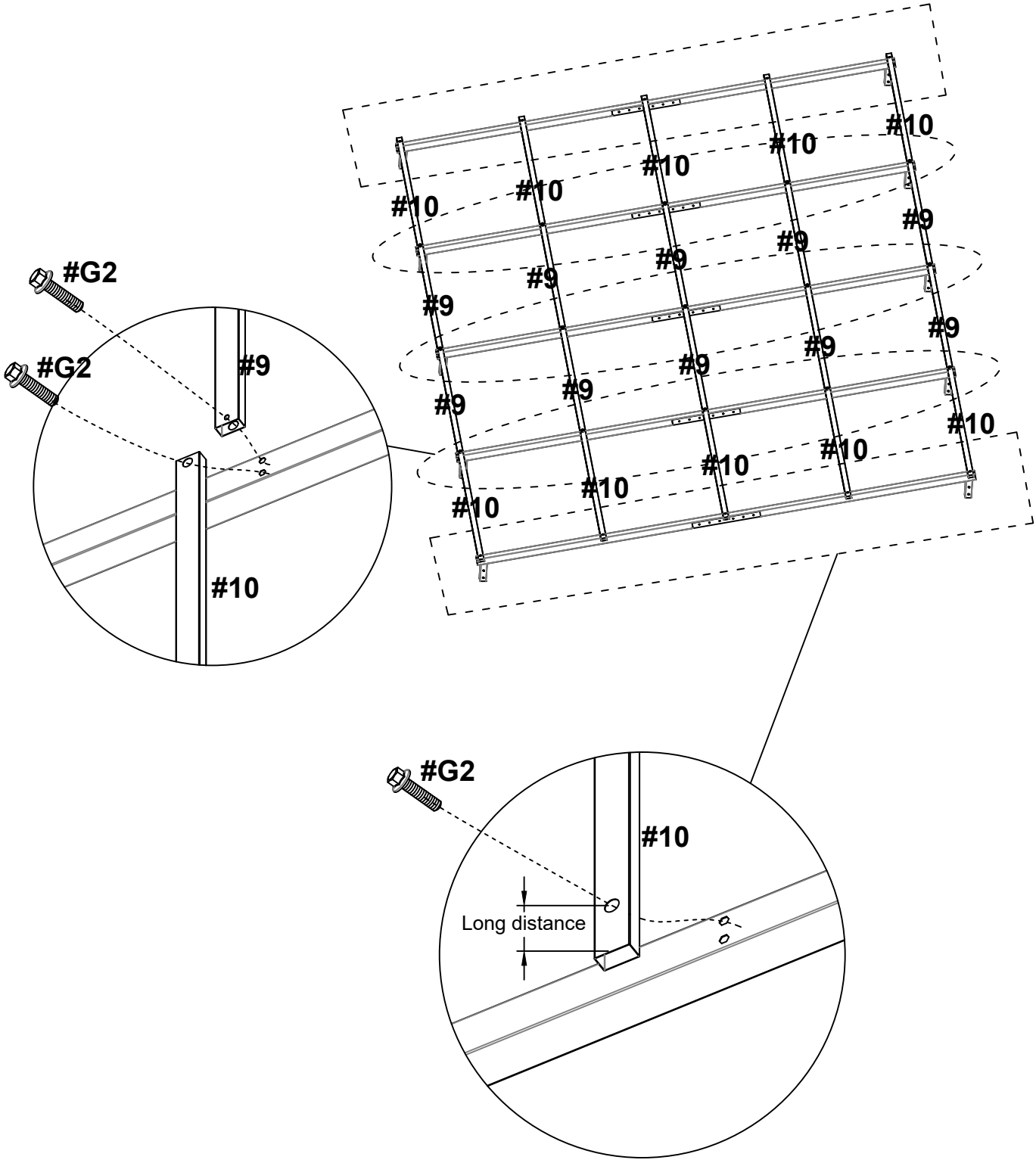

STEP3 Install the Leg pole

#1		X5
#G2	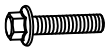	X20

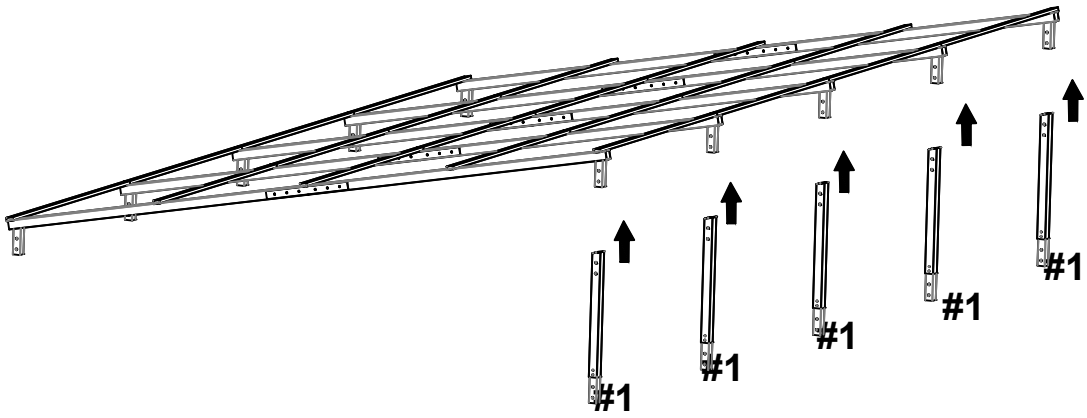

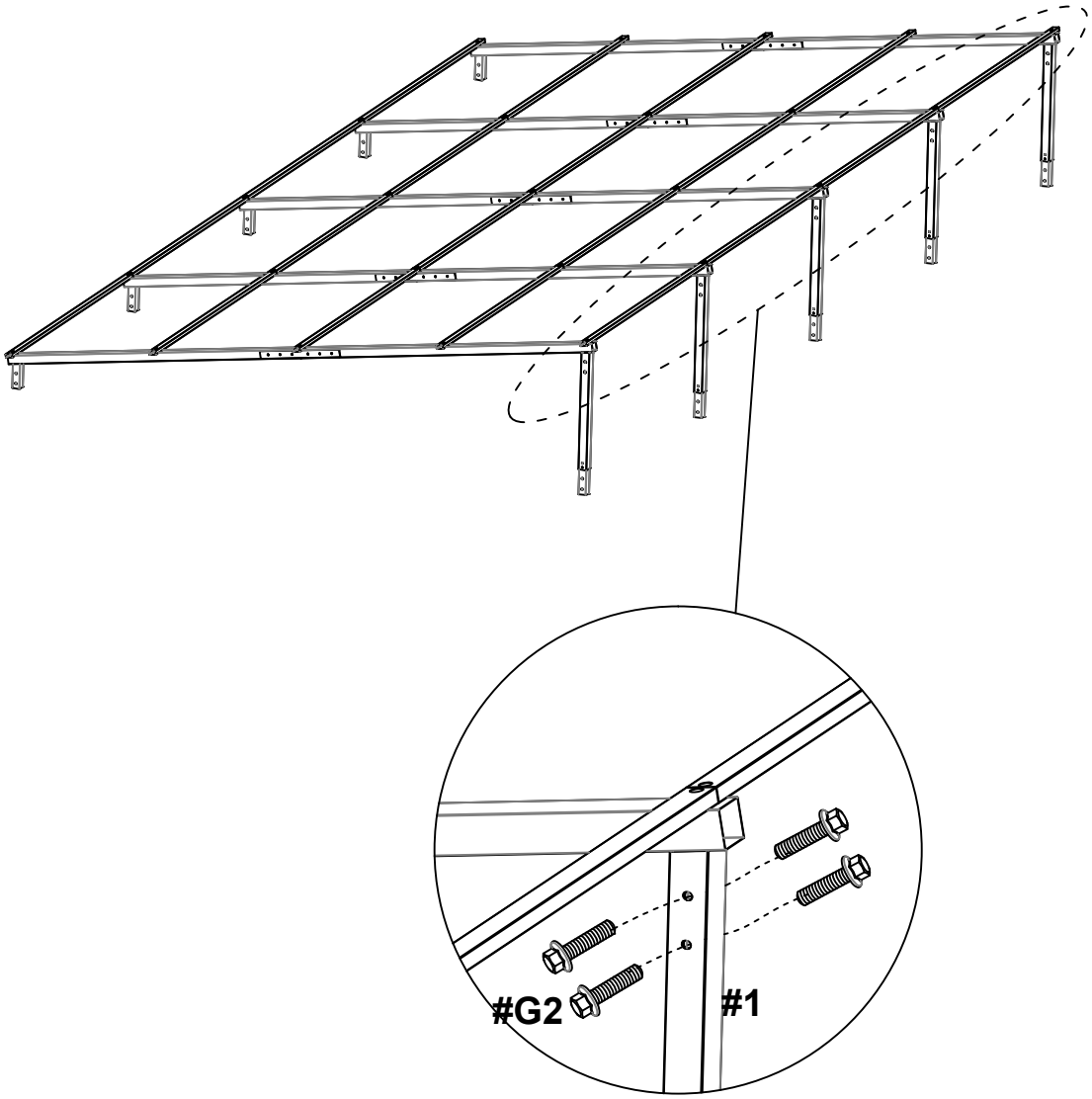

STEP4

#2		X5
#3		X5
#15		X8
#G2	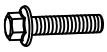	X40

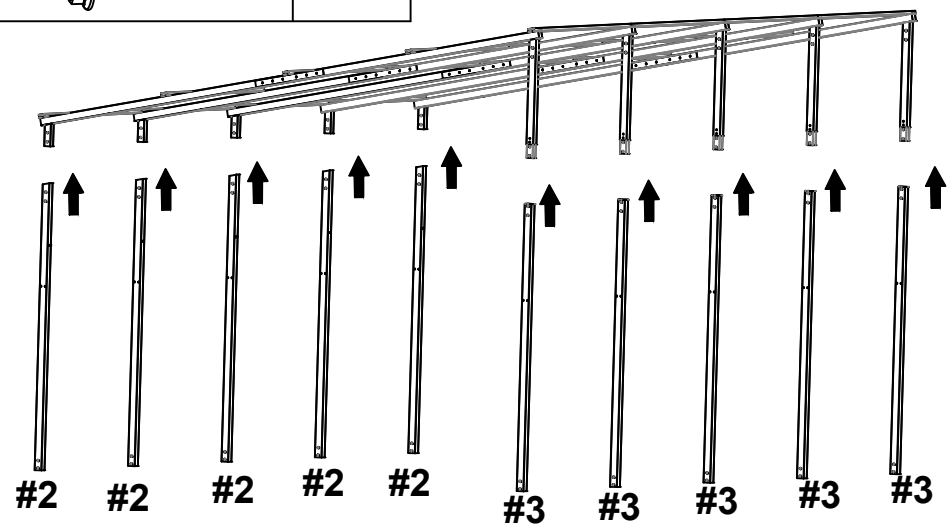

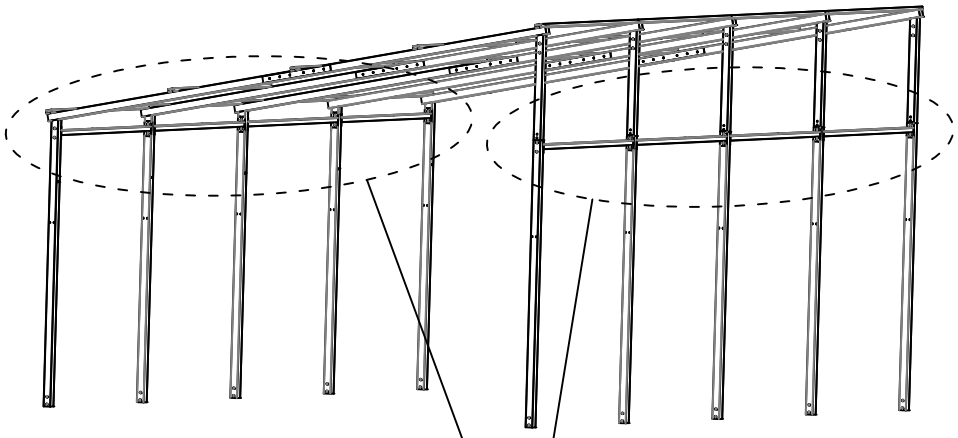

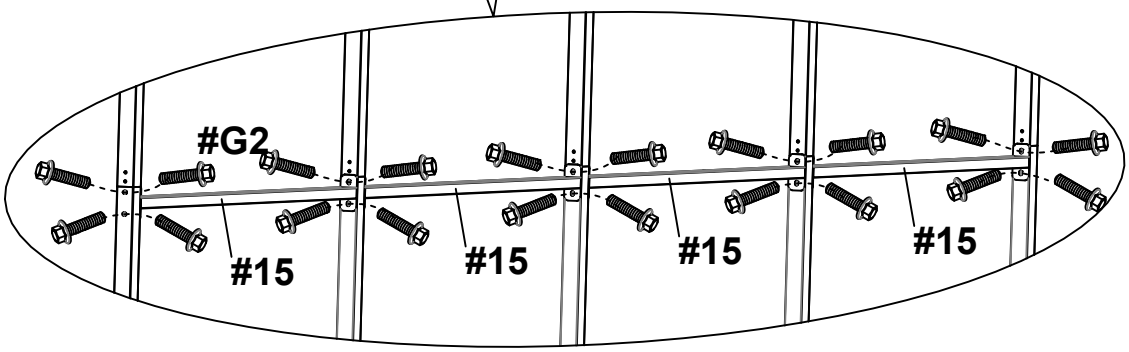

STEP5 Reinforced pole 1 and Reinforced pole 2

#12		X5
#13	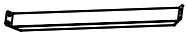	X5
#G2	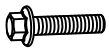	X40

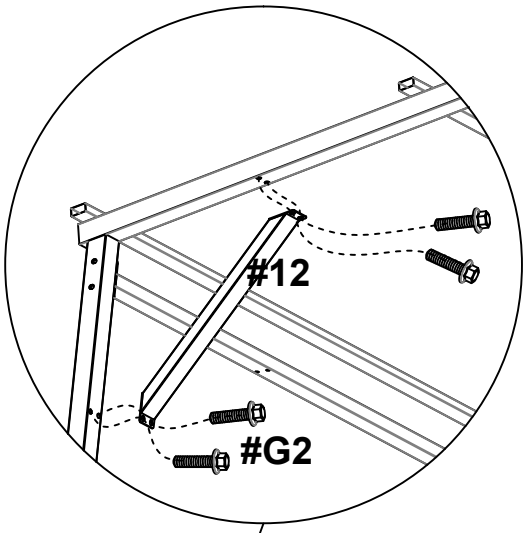

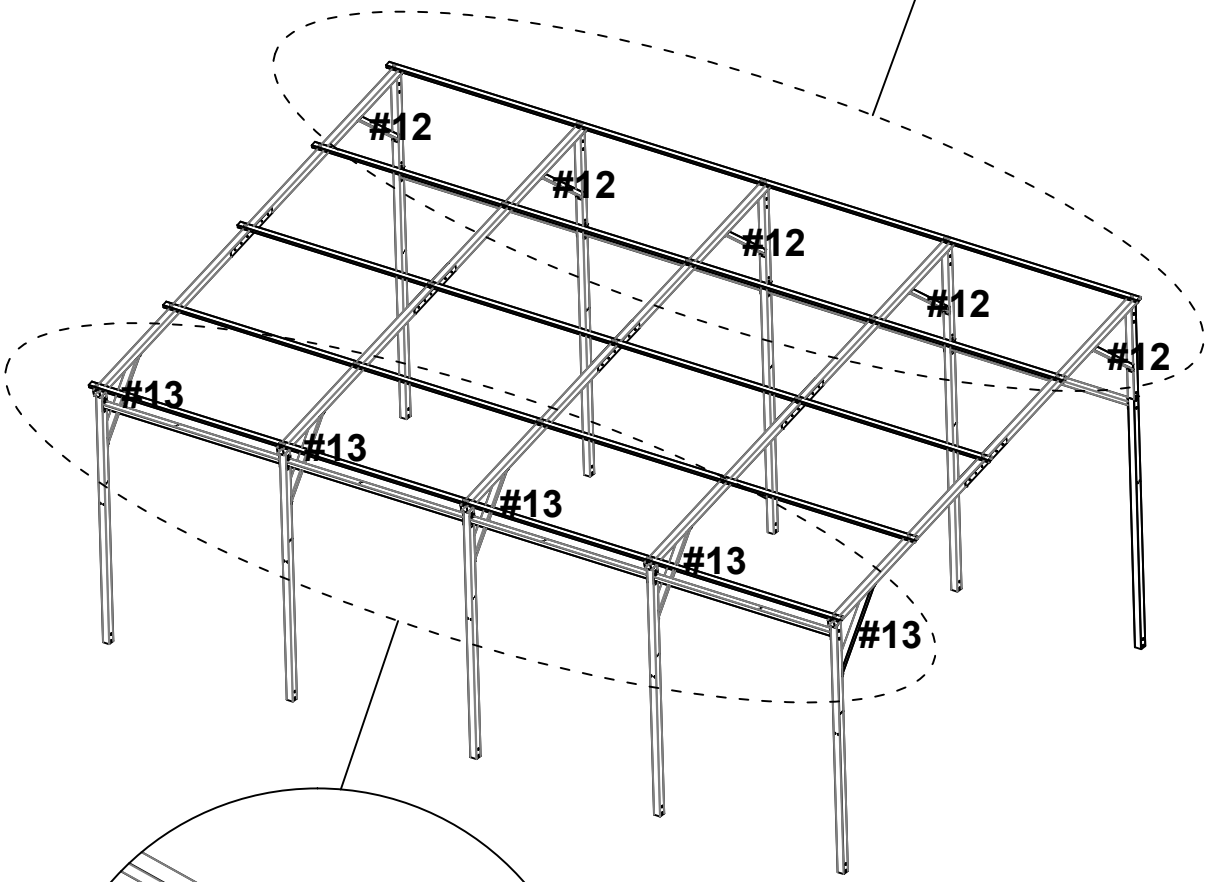

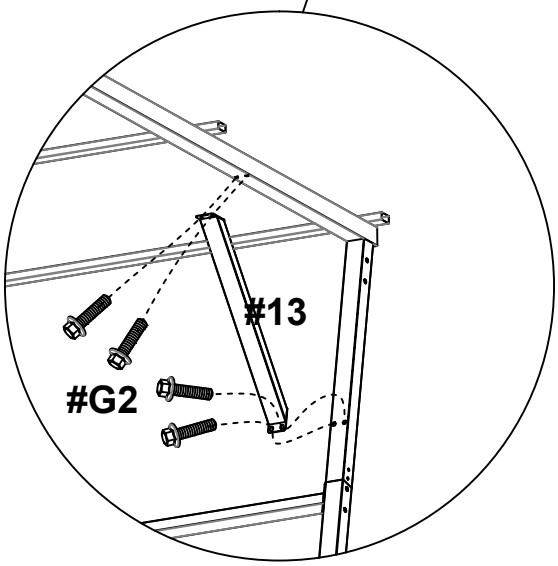

STEP6 Reinforced pole 3

#14		X4
#G4		X8
#G5		X8

STEP7 Install the Frame

#5		X2
#5a		X6
#G2		X64

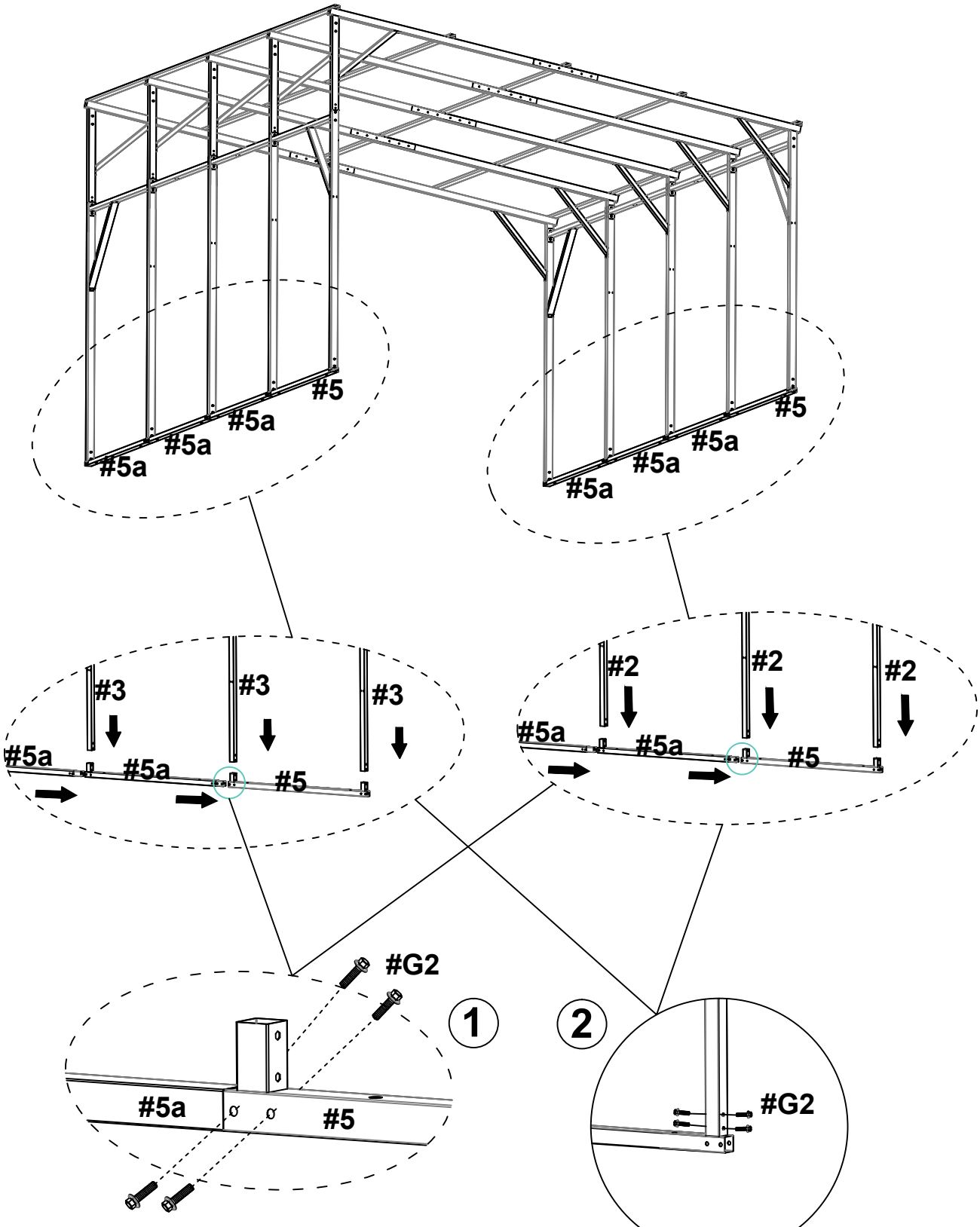

Tips:nstallscrews
on both sides.

STEP8 **Install the Low Roof cover**

#K		X15
#G1		X32

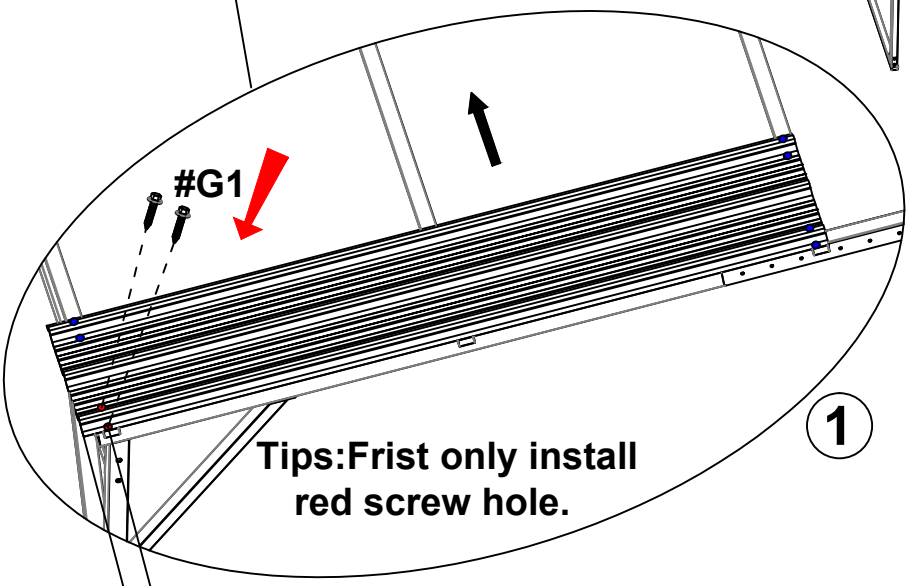

Long distance

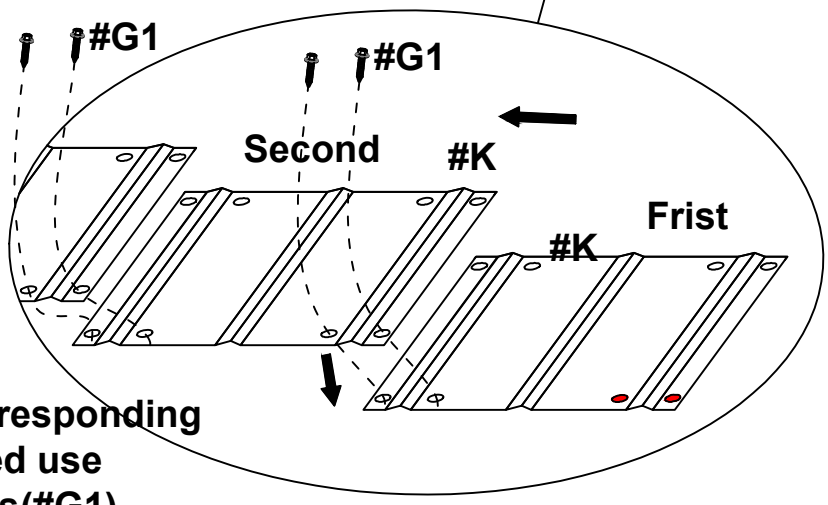

Tips:After the holes corresponding to #K are overlapped use Self-Tapping screws(#G1)

STEP9 Install the Top Roof cover

#K		X15
#G1		X64

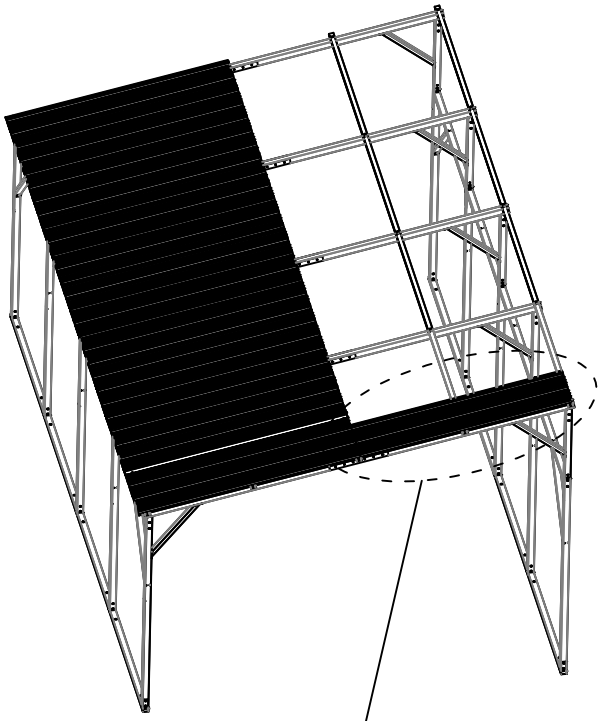

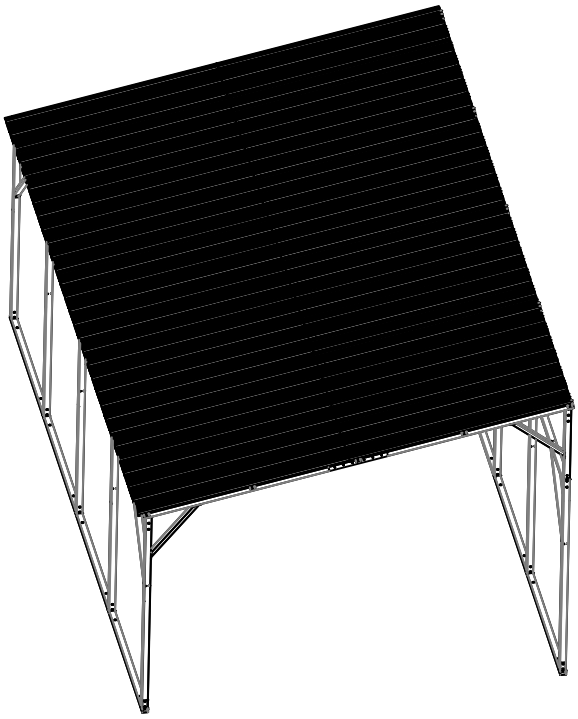

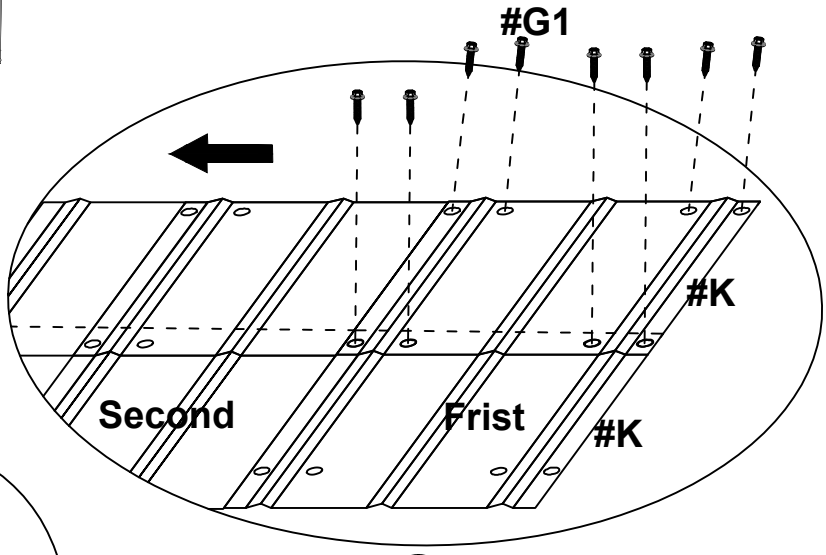

2

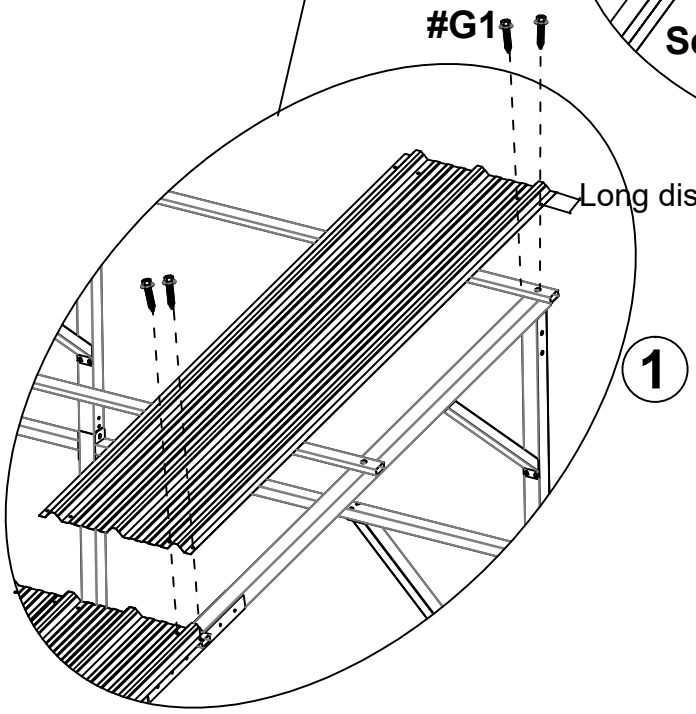

1

Tips:After the holes corresponding to #K are overlapped use Self-Tapping screws(#G1)

STEP10 Install the Anti-cut Tape(#Y2)

#Y2		

Notice:
Wrap the Anti-cut Tape(#Y2) around the outer edge of the Roof Covers.

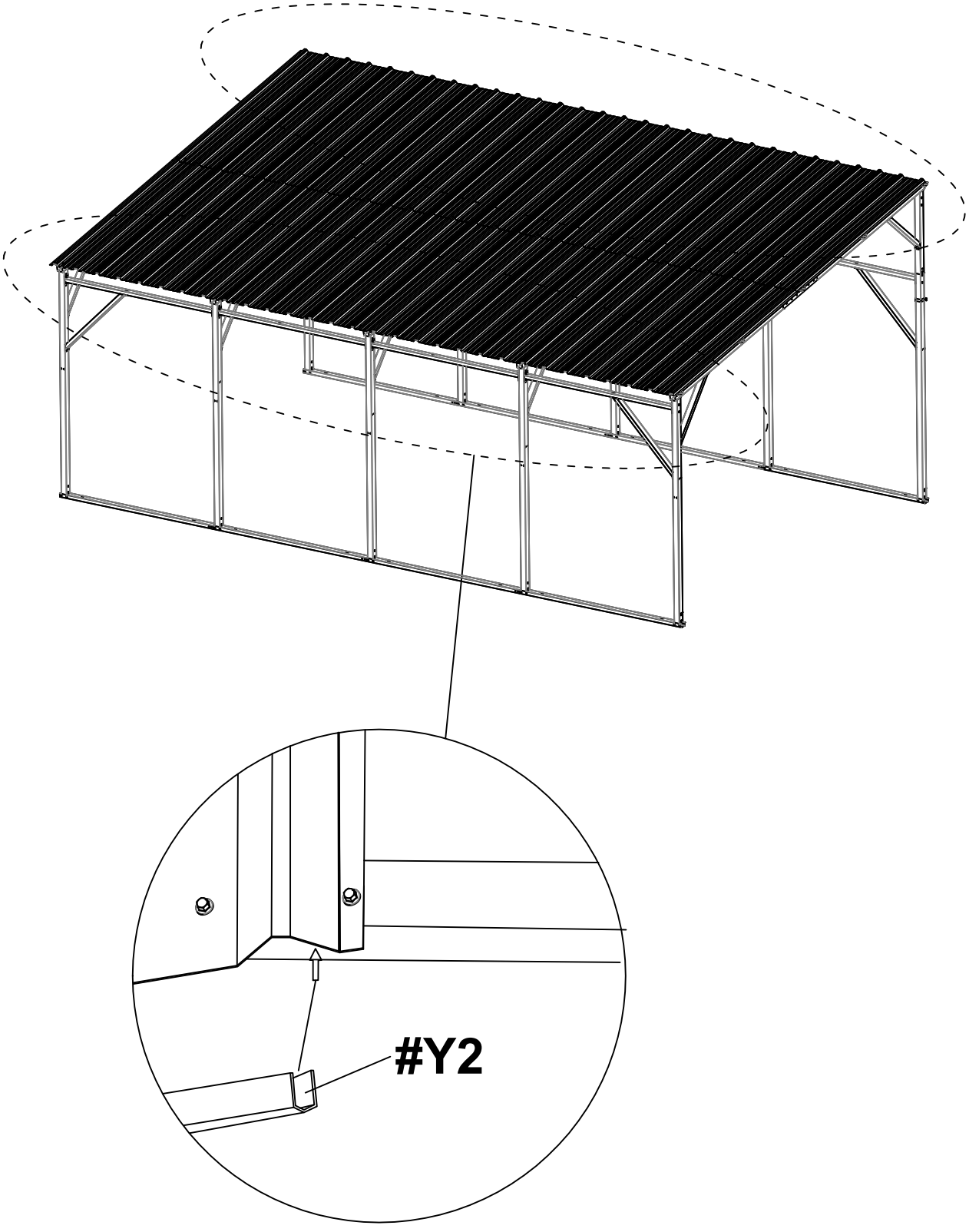

STEP11 Install the Anchor Carport on the ground

#G3	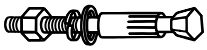	X16

Notice:
The linking screws in this step are all:Expansion screws(#G3)

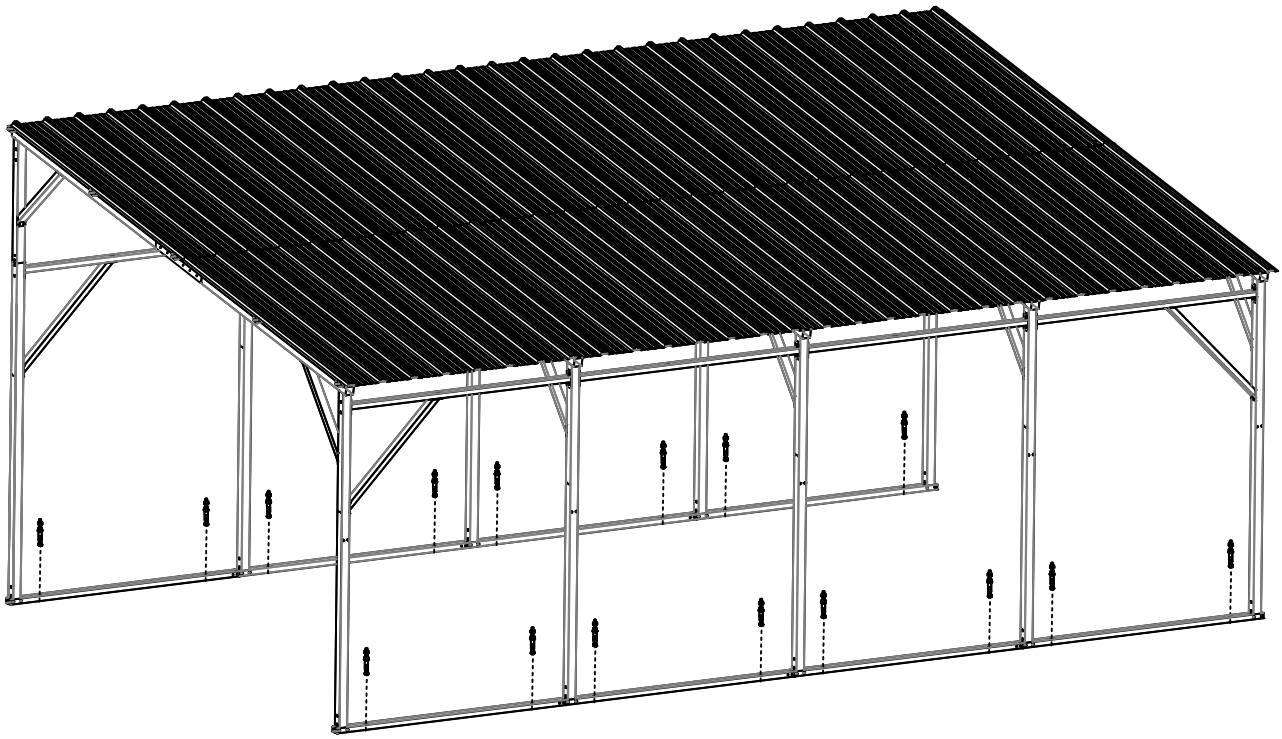

#G3

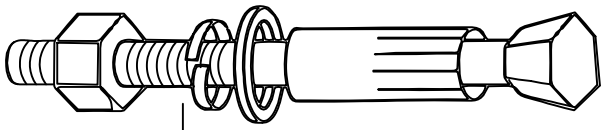

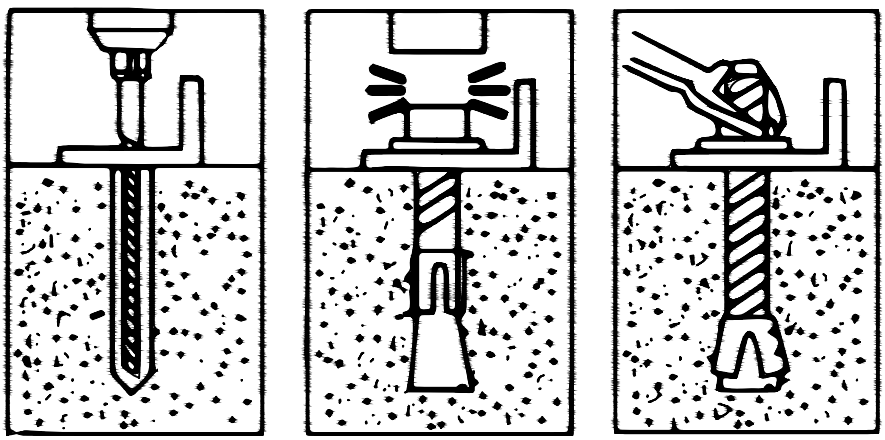

STEP12 **Can also install the anchor carport on the wall**

#16		X5
#G3a		X10

Notice:
The linking screws in this step are all:Expansion screws(#G3a)

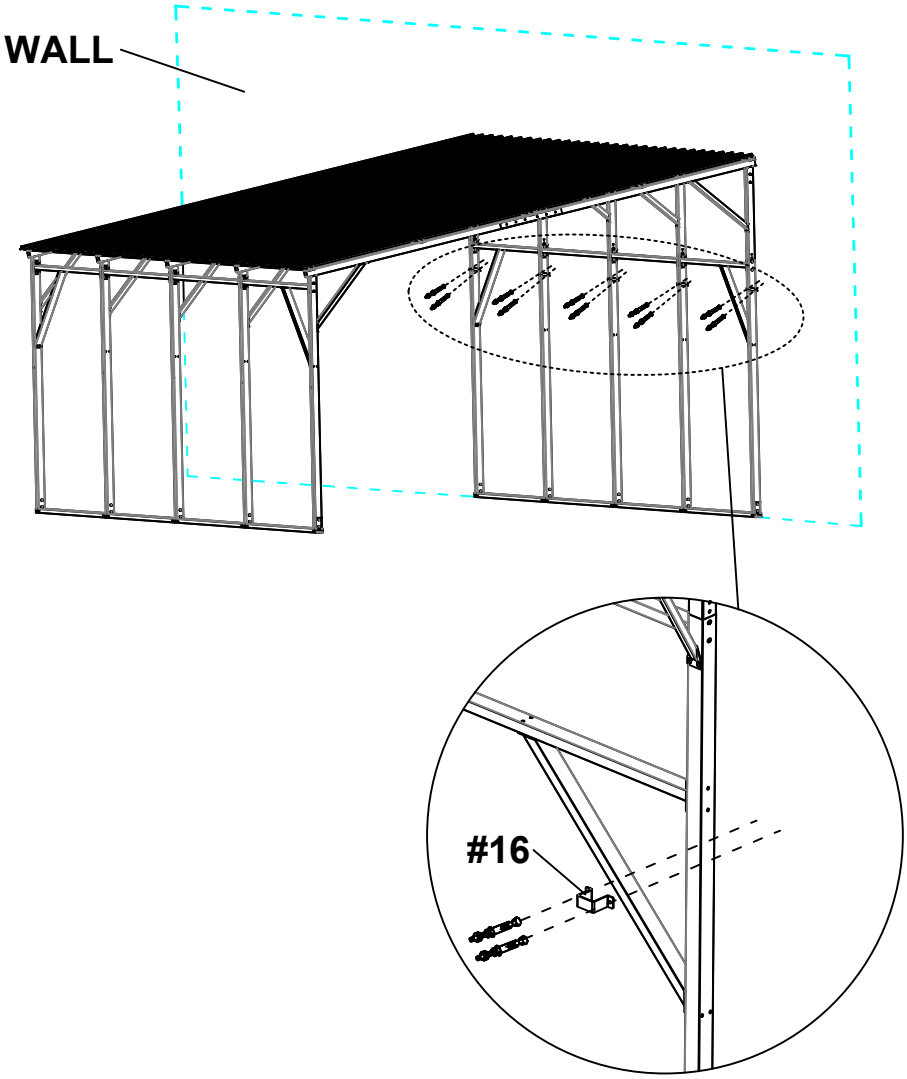

#G3a 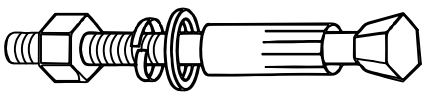

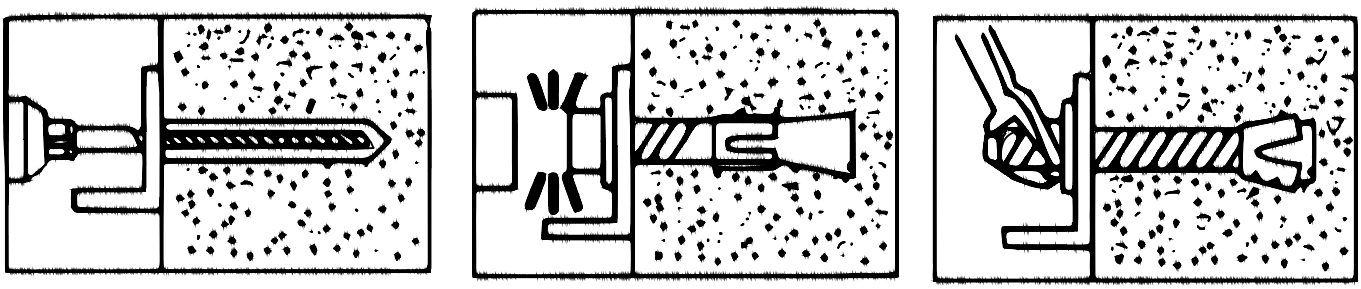

STEP13 **Can also put together it with other products**

#16		X10
#G5		X20

Notice:
The linking screws in this step are all:Socket head bolt & Nut(#G5)

Tips: Remove the screws from the product

