ASSEMBLY INSTRUCTIONS

Thank you for purchasing this quality.Be sure to check all packing materials carefully for small parts that may have some loose inside the carton during shipment.

STEP 1:

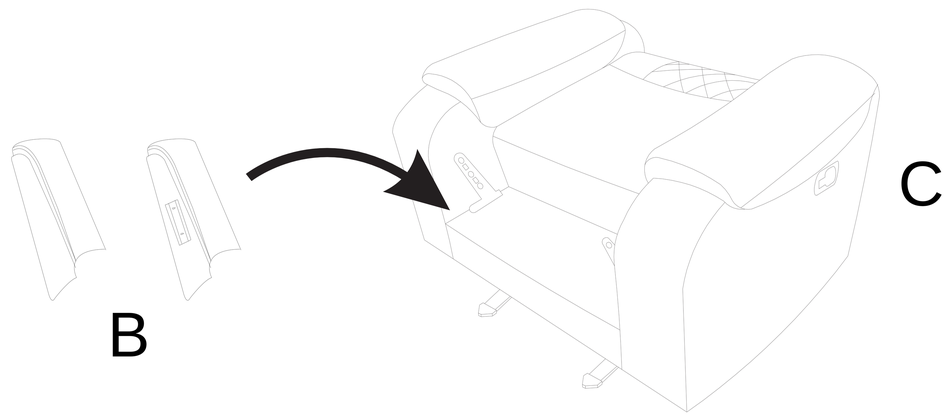

STEP 2:

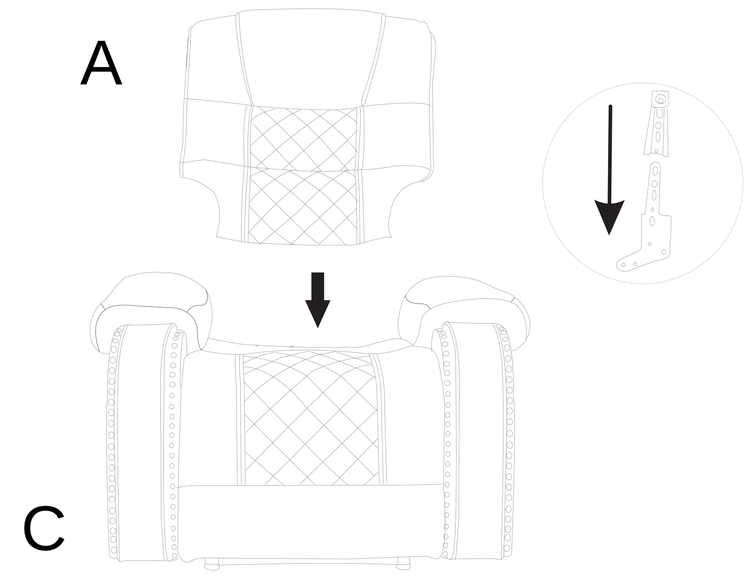

STEP 3:

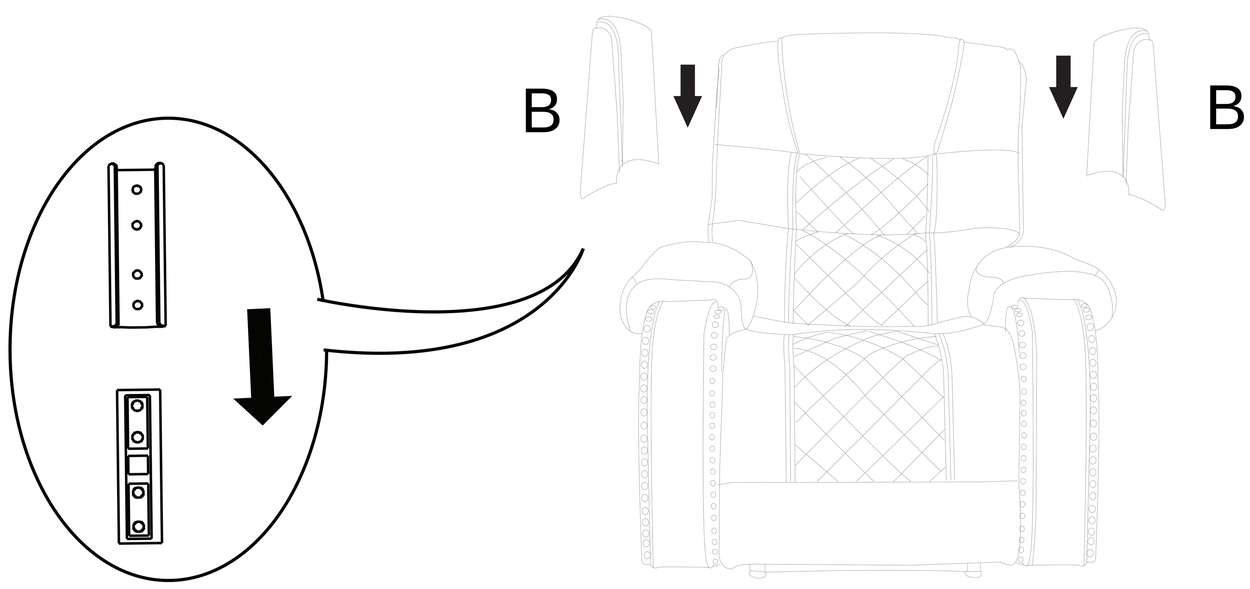

STEP 4:

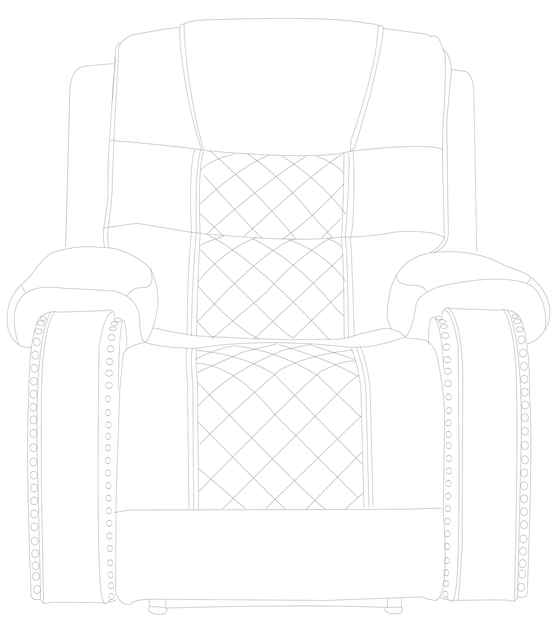

Parts List

No.	SKETCH	DESCRIPTION	QTY.
A	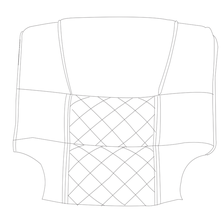	BACK CUSHION	1
B	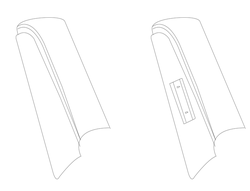	WING	2
C	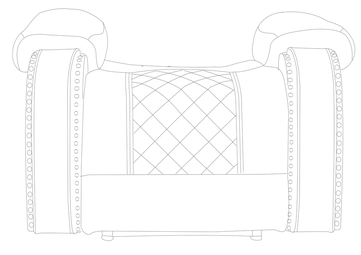	BODY	1