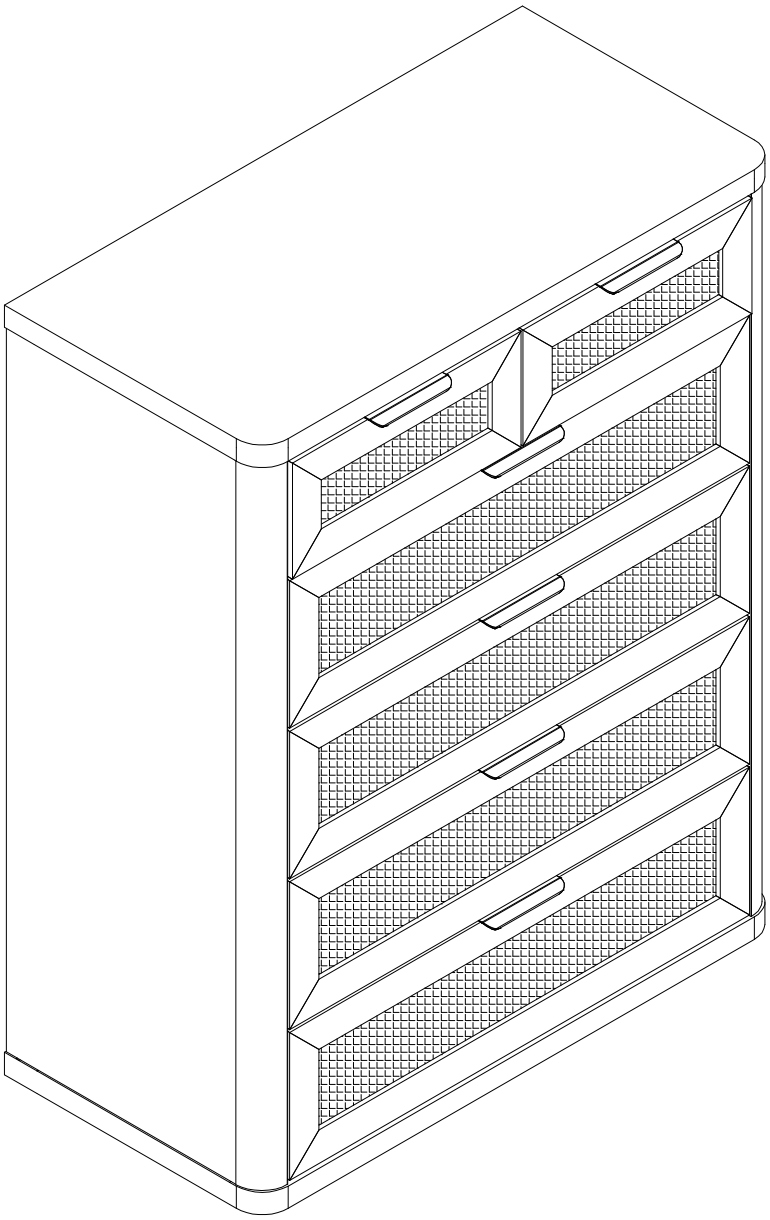

ATTENTION

If there is any missing, please kindly send us messages to let us know the part number of missing part regarding to the first page of instructions.

Please also provide your full address, recipient name and contact phone number so that we can send replacement to you as soon as possible.

Children have died from furniture tipover. To reduce the risk of furniture tipover. ALWAYS install tipover restraint provided.

BEFORE STARTING

Before Using Product

- Read each step carefully before starting.It is very important thateach step is performed in the correct order.If these steps are not followed in sequence,assembly difficulties will occur.
- Make sure all parts are included.
- Work in a spacious area and near where the unit will be used,preferably on a carpet,or use a piece of the cardboard packaging to protect your floor and product.
- For a smooth assembly process,we suggest you keep a lite tightness for all the screws during assembly.After the whole product is assembled, firmly tighten all the screws.

⚠ WARNING

- Do not allow children to climb on unit.
- Avoid sharp objects or corrosive chemicals to prevent damage to the product.
- During assembly,keep parts and packaging materials away from children and pets as there could be potential injury and choking hazards.
- Please make sure that all objects are removed before moving the assembled unit.
- The unit must be team lifted,not dragged or pushed.Failure to do so could cause instability,product collapse,and/or serious injury.
- Be careful when using power tools to assemble your furniture.Power tools may strip or damage the parts.

QUICKFIT

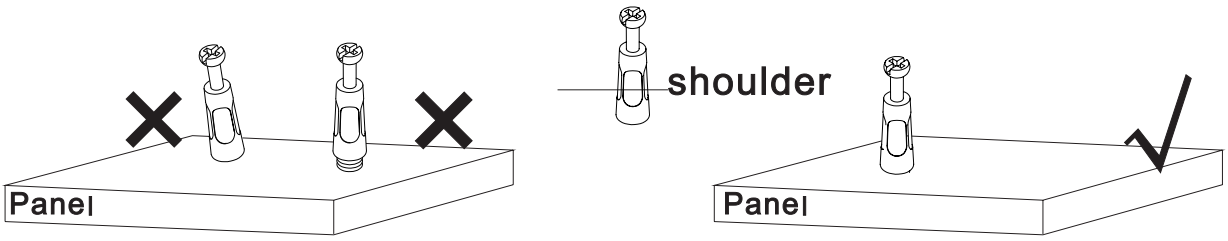

Tighten quickfit until shoulder is flush with panel. Do not overtighten or undertighten.

CAM LOCK

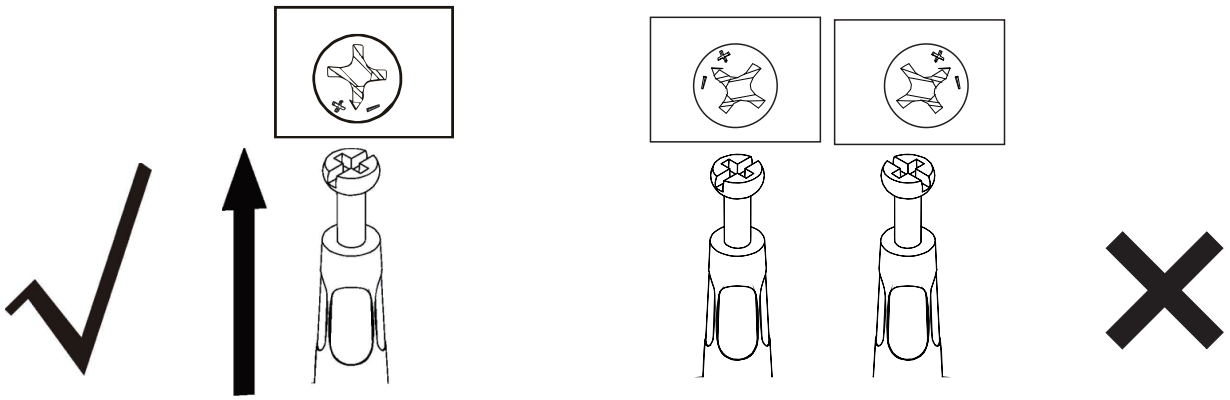

CORRECT WRONG

When fitting cam lock, ensure starting positions is correct before you insert cam lock to quickfit.

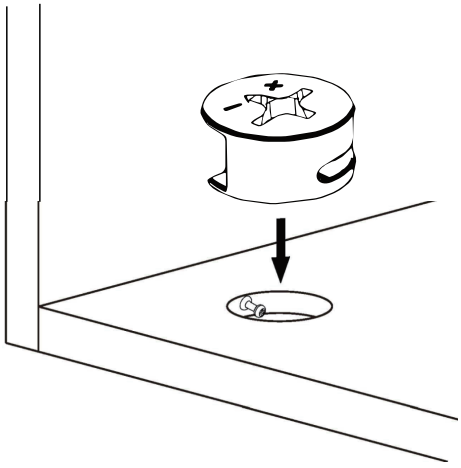

Quickfit head should be in the center of the cam lock. When the two panels are joined. Cam lock should be inserted before quickfit.

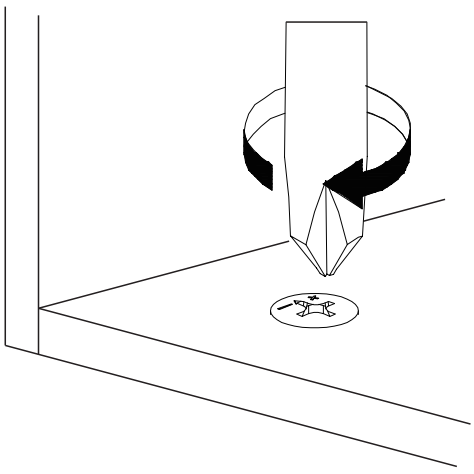

Turn cam lock clockwise to tighten.

PART LIST

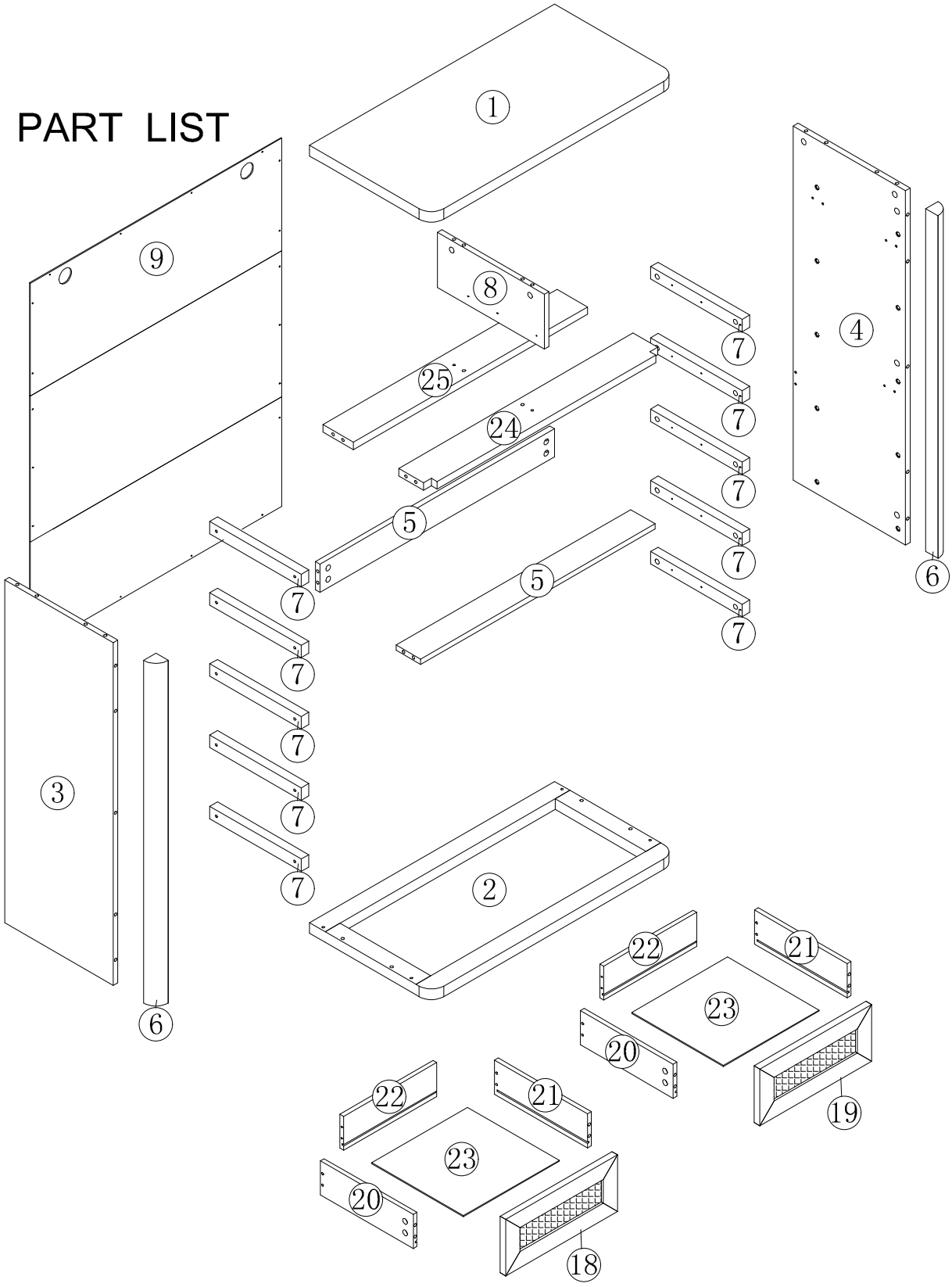

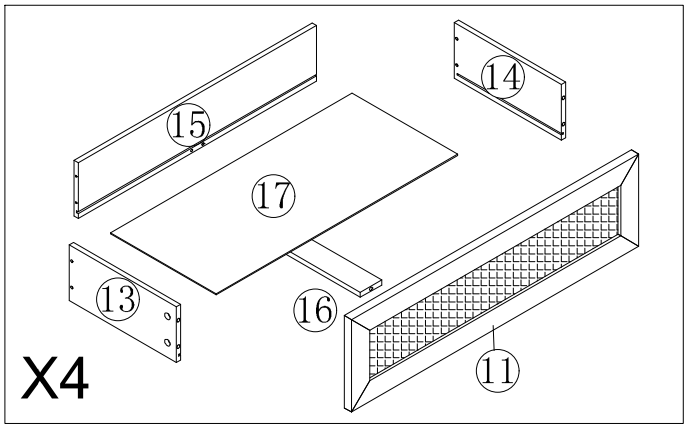

PART LIST

1 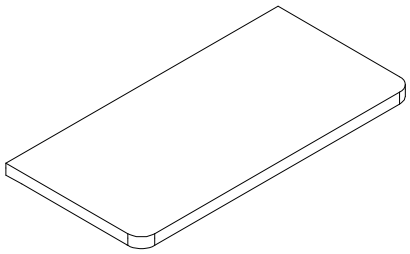 1PC	2 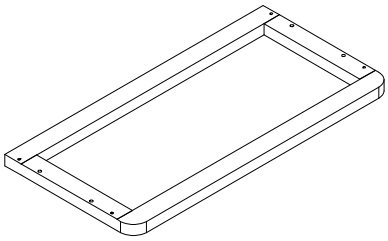 1PC	3 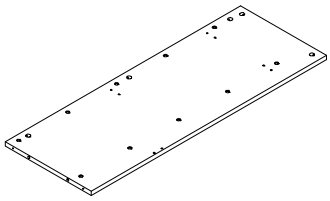 1PC
4 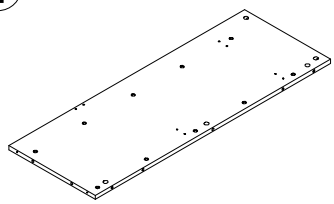 1PC	5 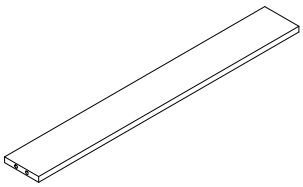 2PCS	6 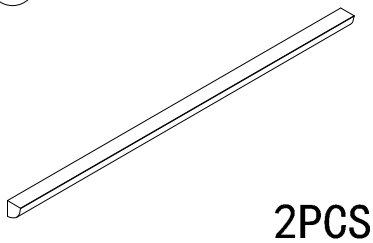 2PCS
7 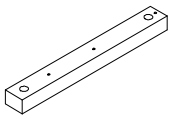 10PCS	8 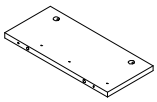 1PC	9 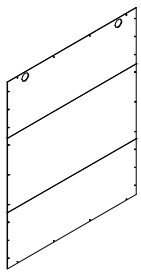 1PC
11 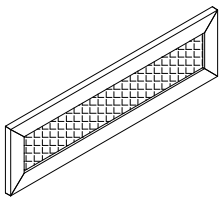 4PCS	13 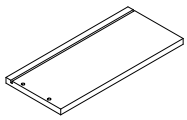 4PCS	14 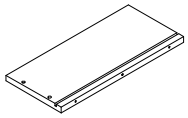 4PCS
15 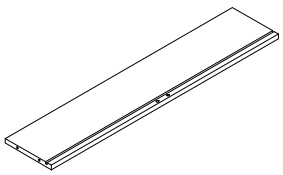 4PCS	16 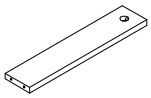 4PCS	17 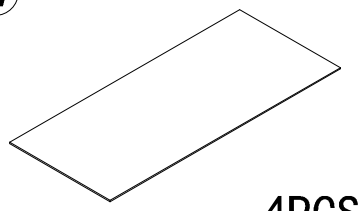 4PCS
18 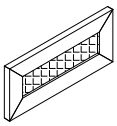 1PC	19 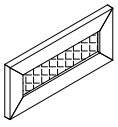 1PC	20 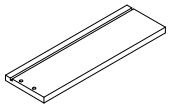 2PCS

PART LIST

21 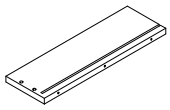 2PCS	22 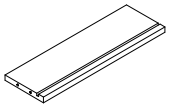 2PCS	23 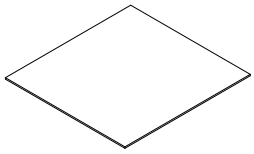 2PCS
24 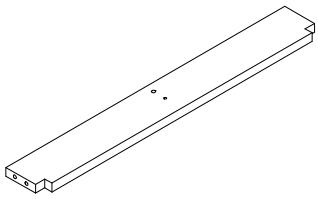 1PC	25 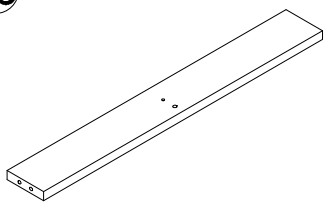 1PC	

HARDWARE LIST

A 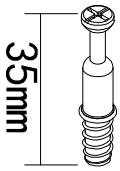 ϕ6X35 (28+2)PCS	B  ϕ15X9.5 (56+3)PCS	C 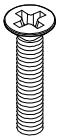 ϕ1/4X25 (20+2)PCS
D  ϕ8X30 (16+1)PCS	E 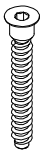 ϕ5X40 (38+3)PCS	F 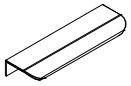 6PCS
G 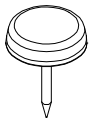 (4+1)PCS	H  ϕ4X12 (22+2)PCS	J 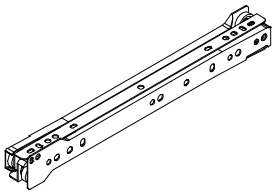 6PCS
K  ϕ3.5X12 (84+3)PCS	M 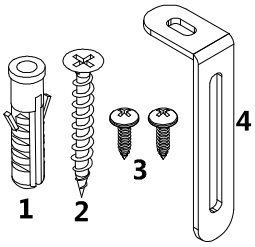 2SET	N 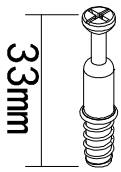 ϕ6X33 (28+2)PCS
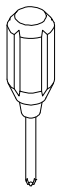 1PC	 3PCS	

J X 6SET

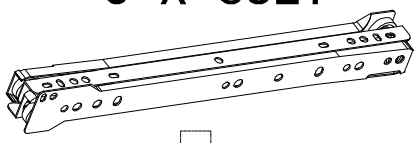

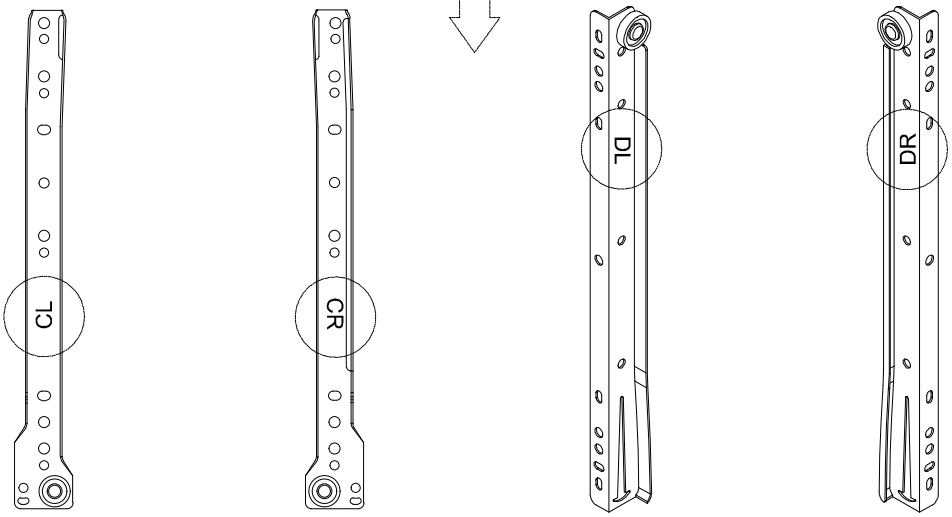

CL CR DL DR

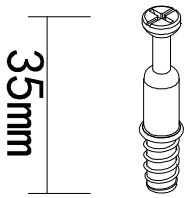

A

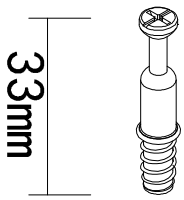

N

M =

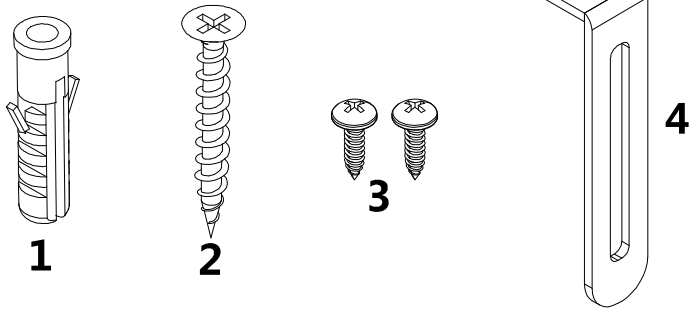

STEP 1

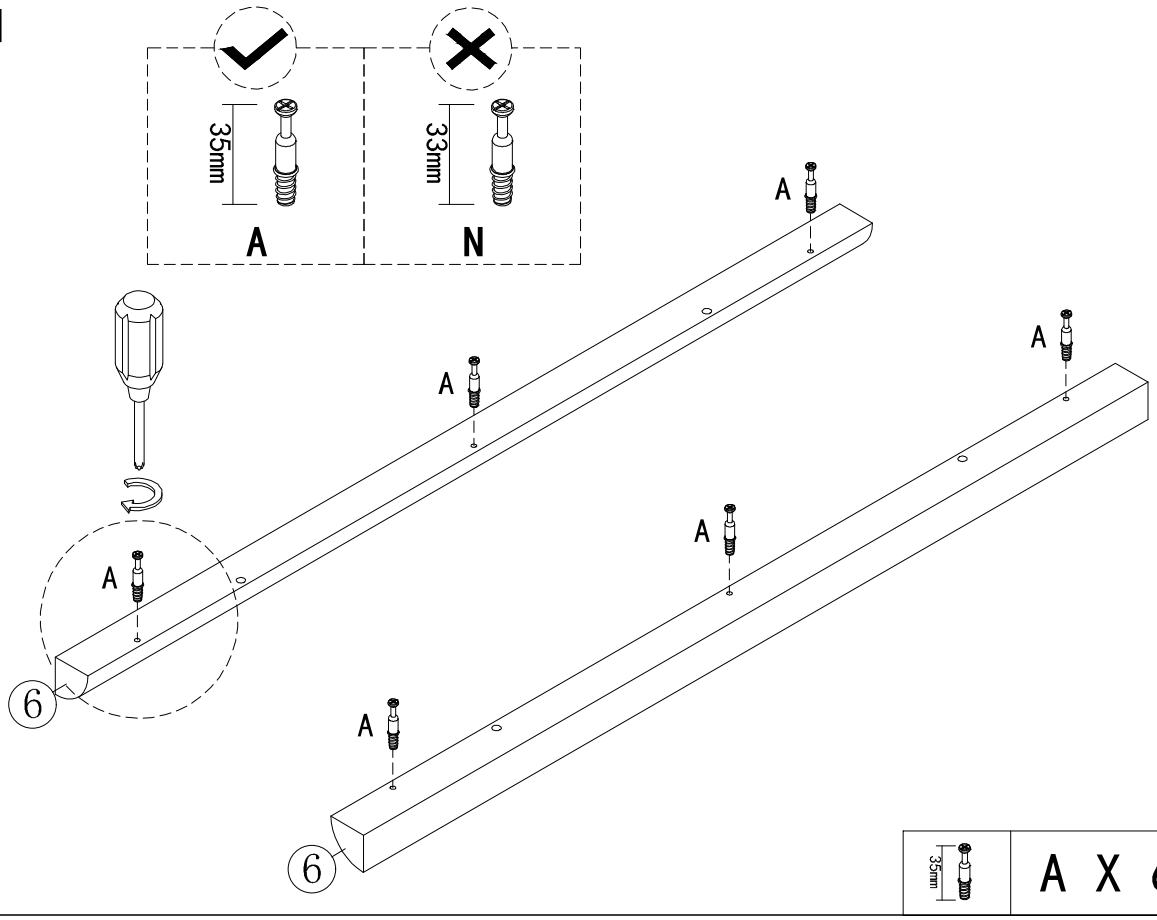

	A X 6PCS

STEP 2

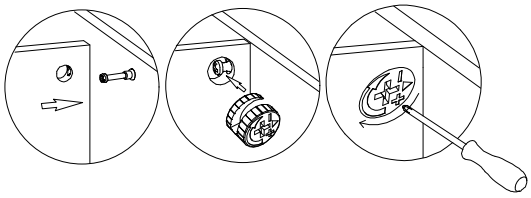

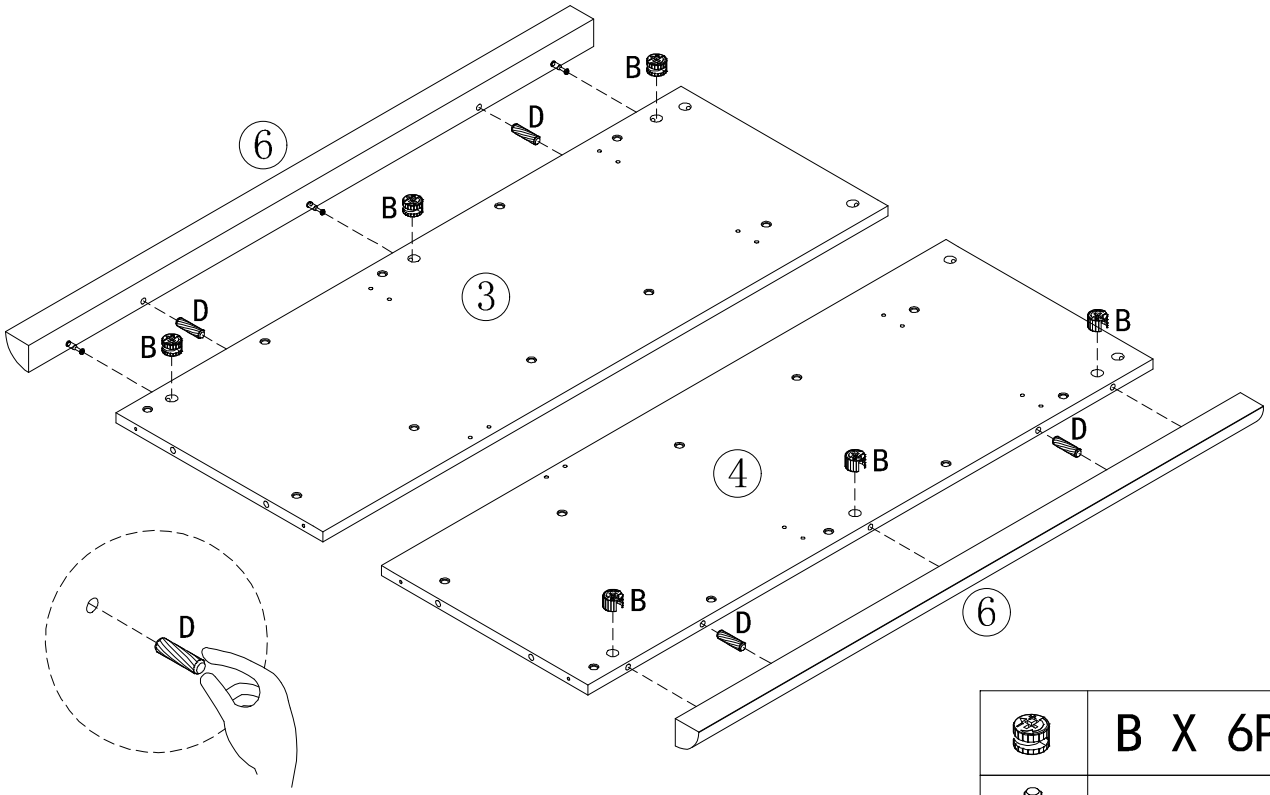

	B X 6PCS
	D X 4PCS

STEP 3

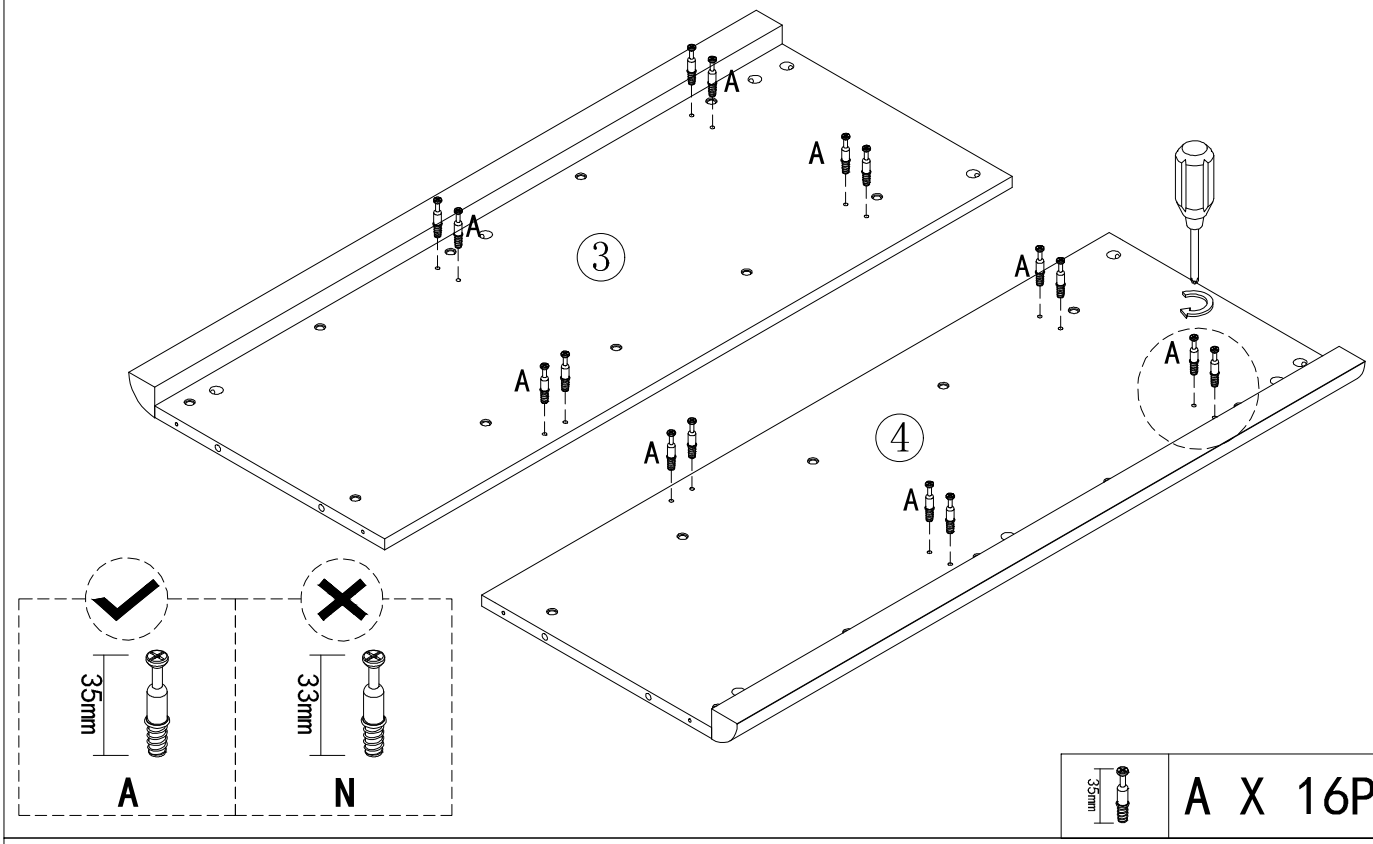

A X 16PCS

STEP 4

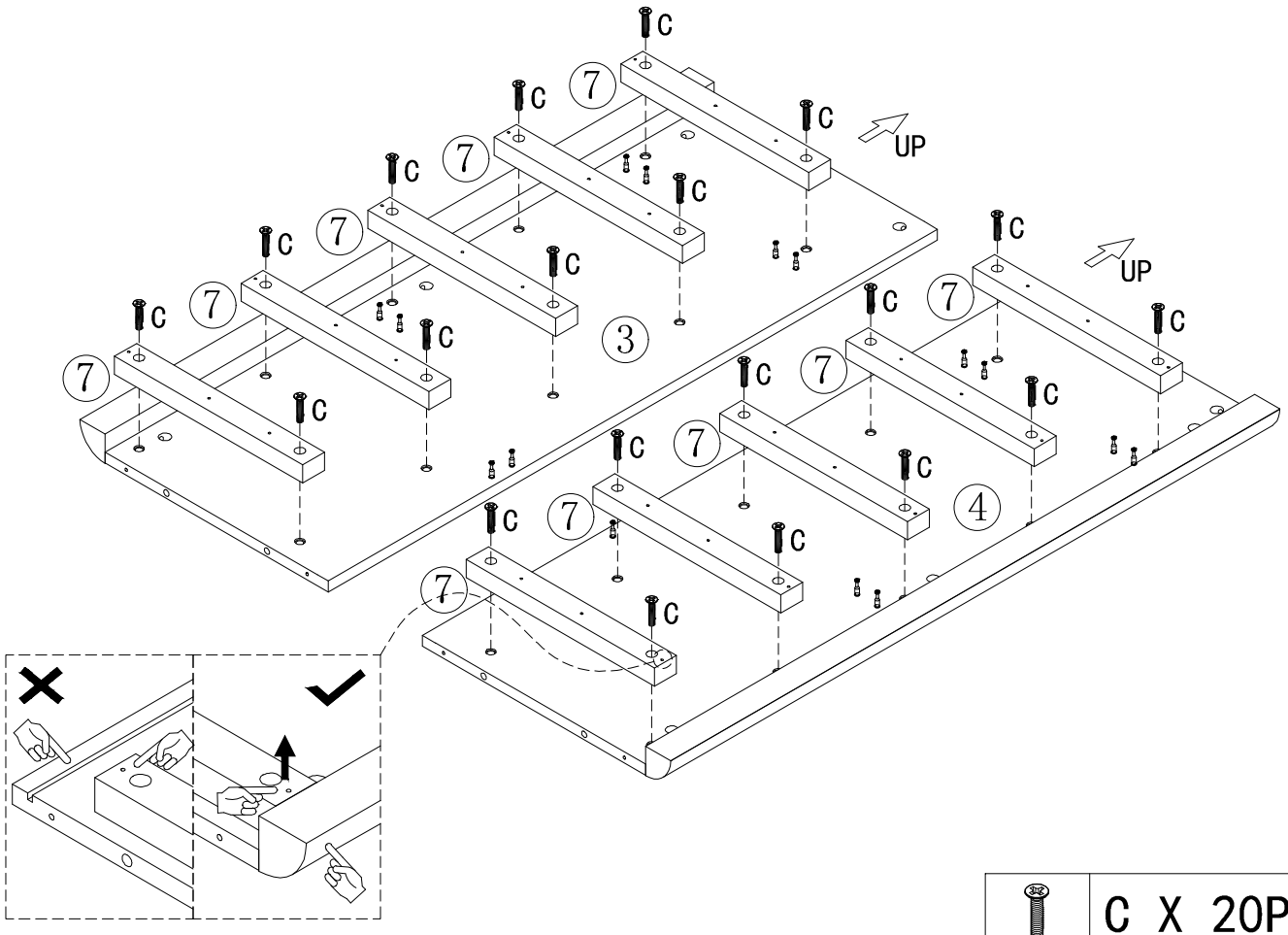

C X 20PCS

STEP 5

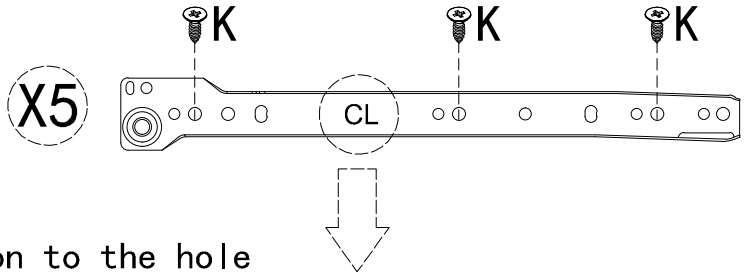

Pay attention to the hole position.

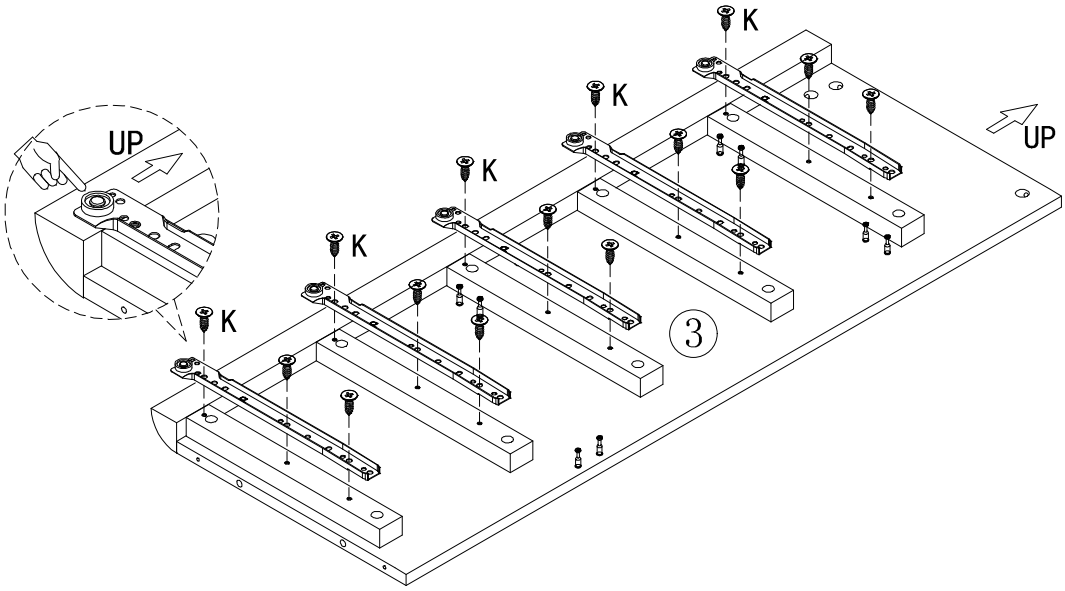

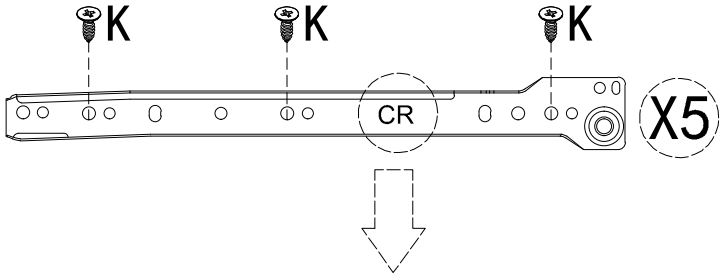

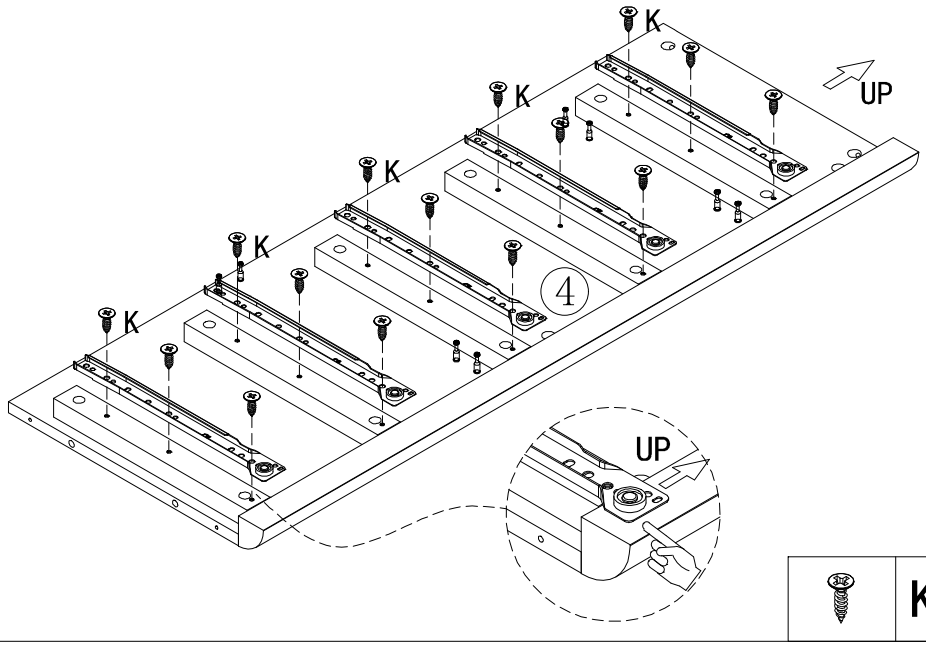

	K X 30PCS

STEP 6

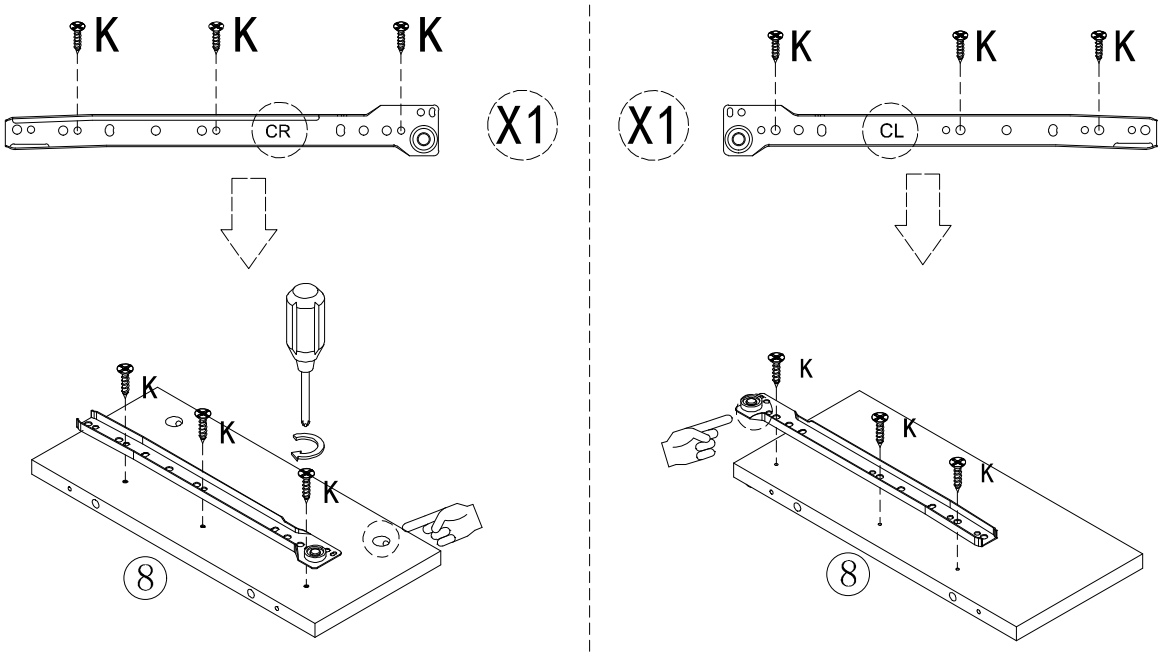

Pay attention to the hole position.



	K X 6PCS

STEP 7

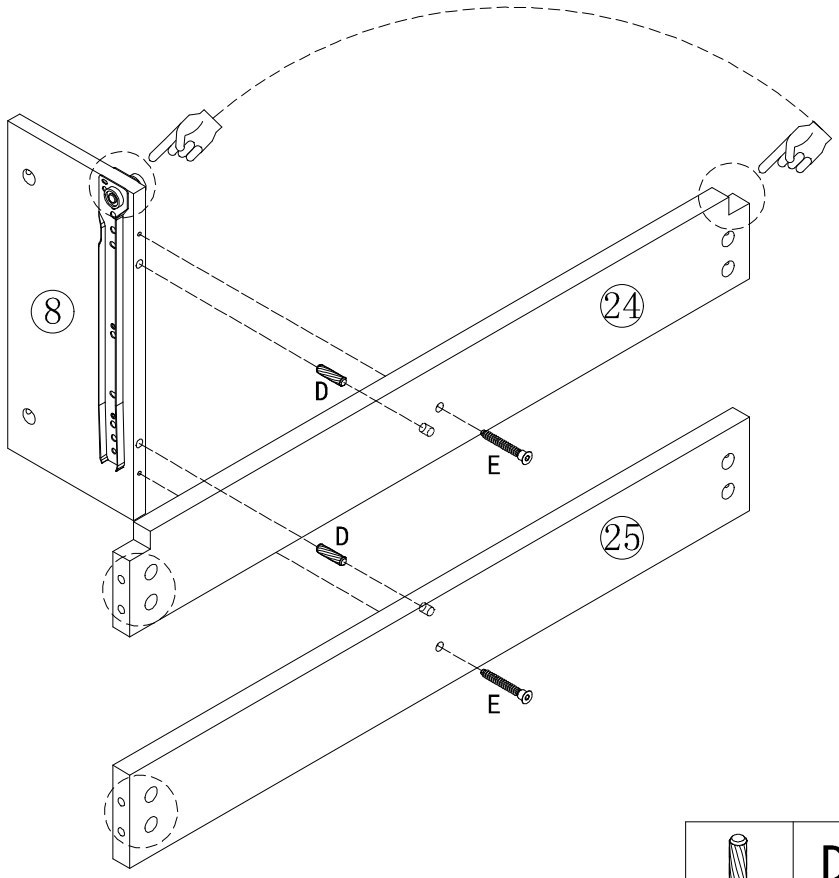

	D X 2PCS
	E X 2PCS

STEP 8

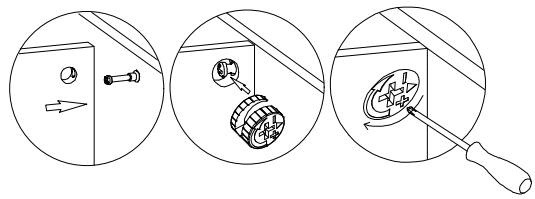

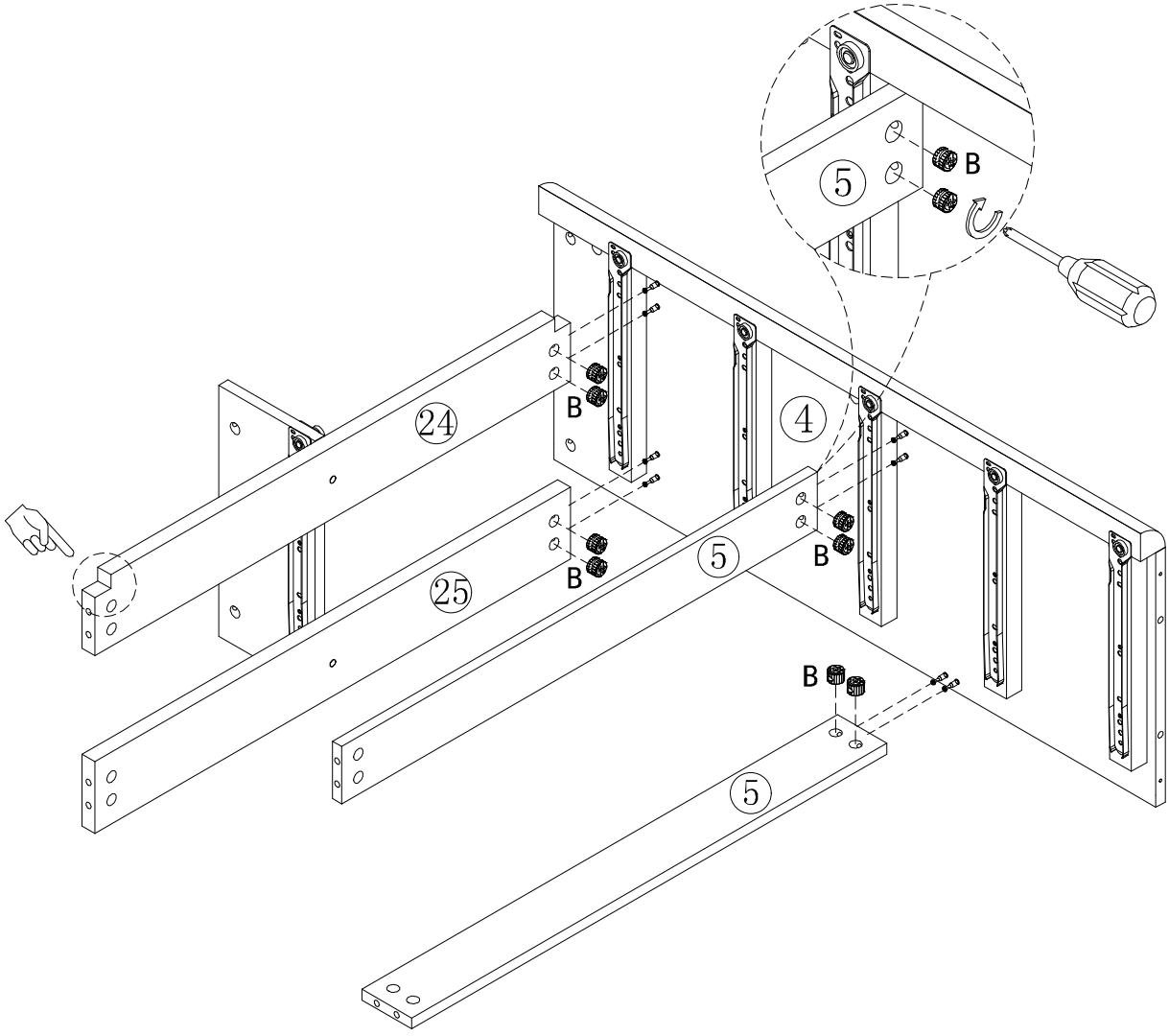

	B X 8PCS

STEP 9

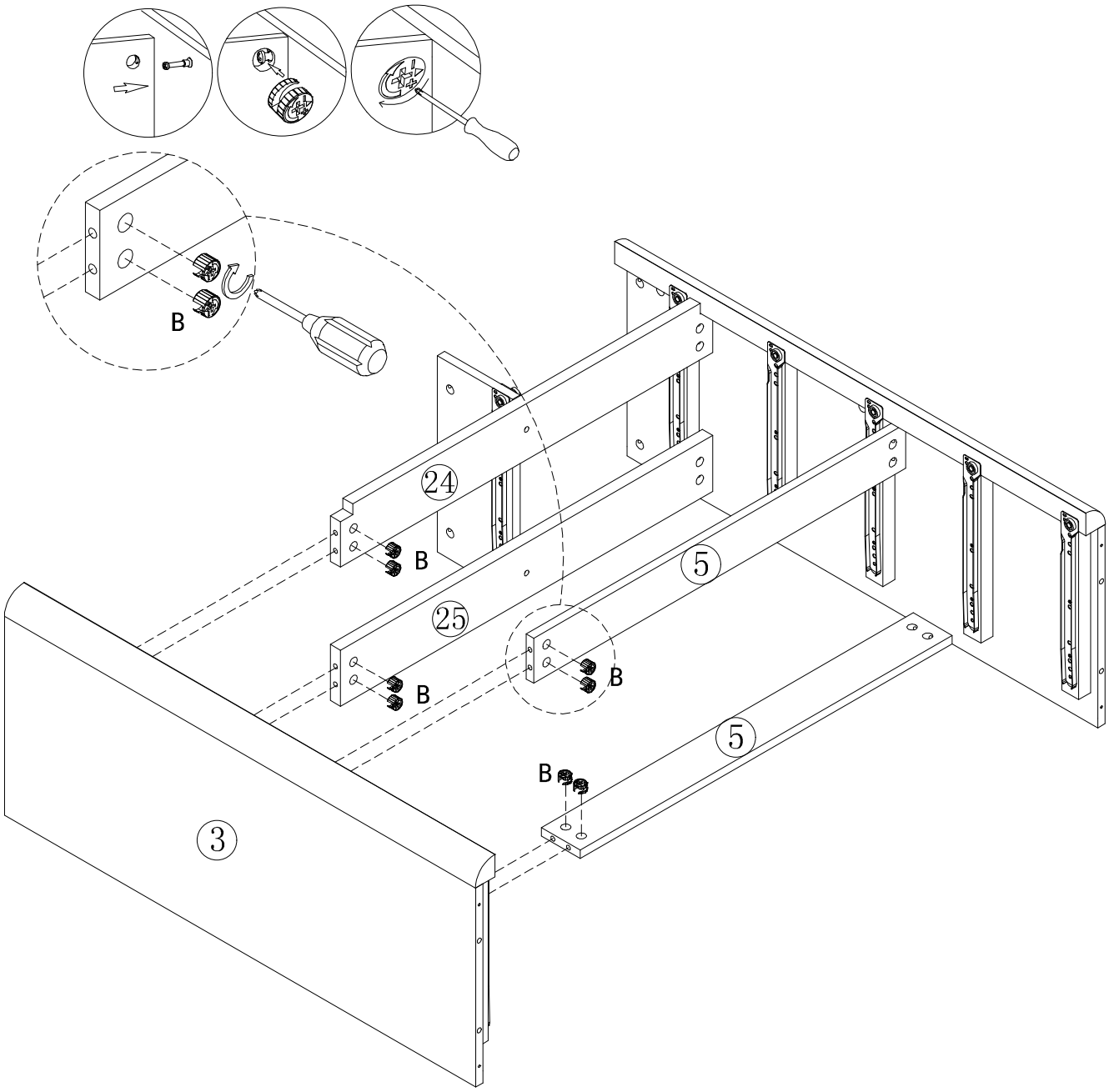

	B X 8PCS

STEP 10

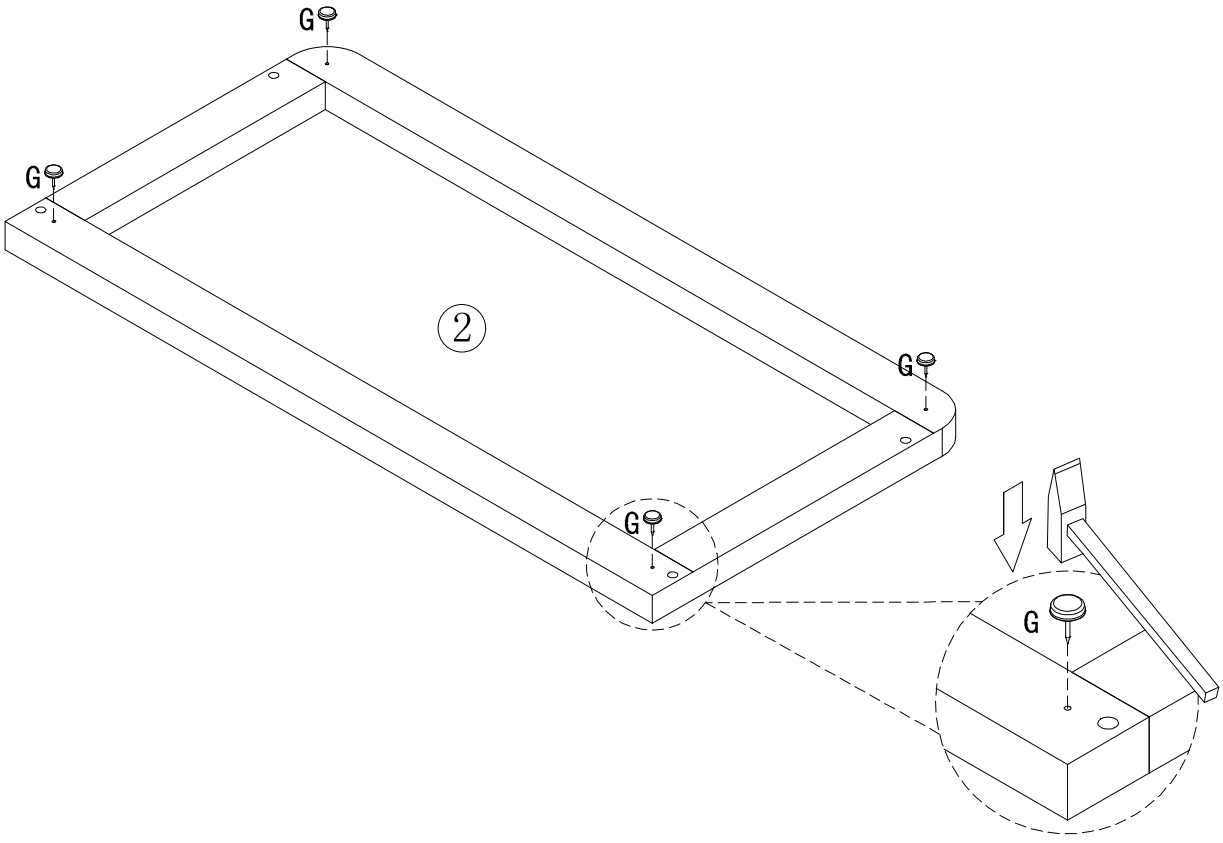

	G X 4PCS

STEP 11

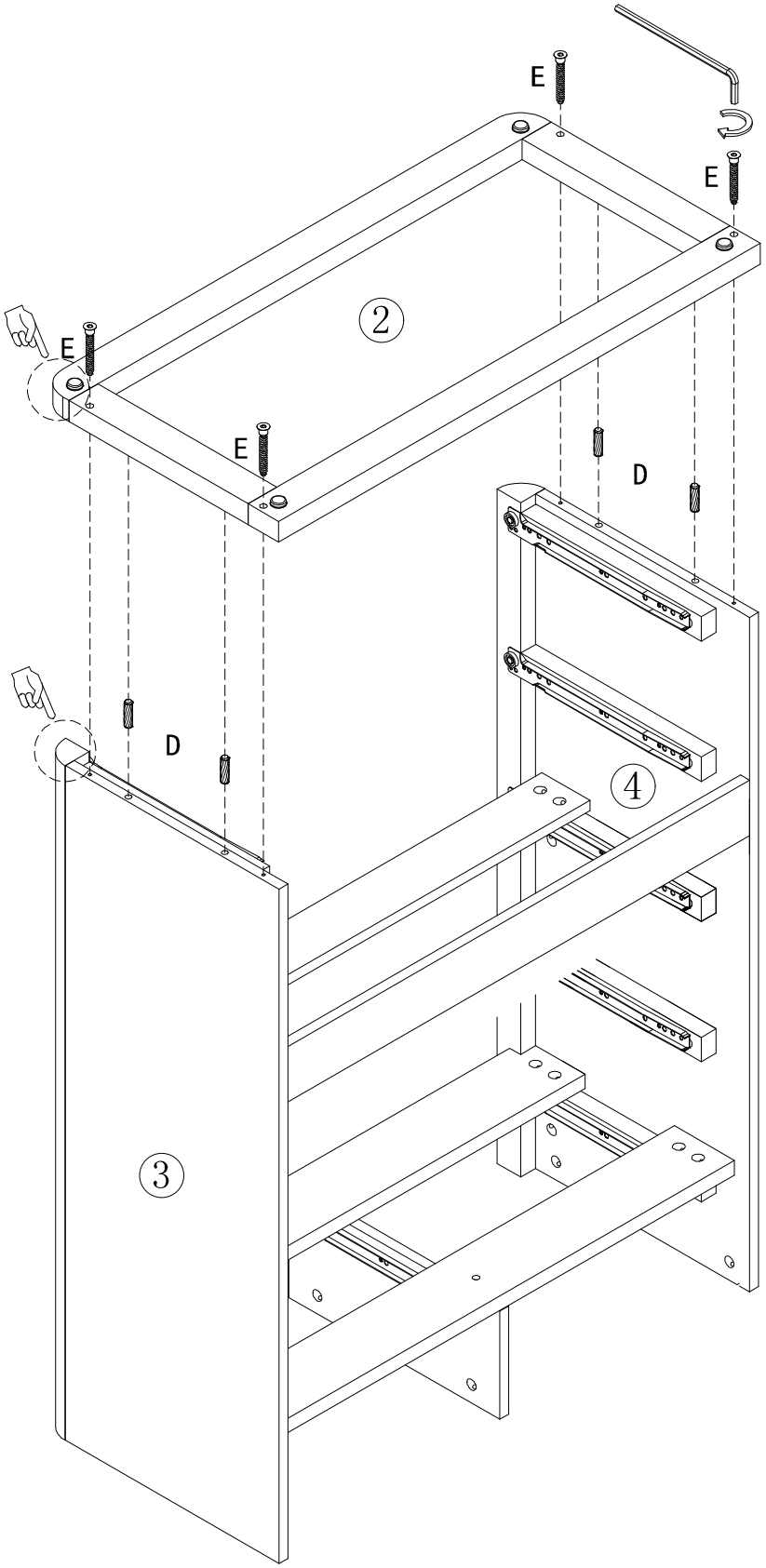

	D X 4PCS
	E X 4PCS

STEP 12

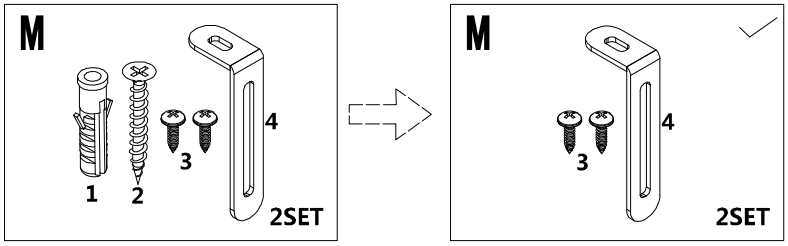

Note: Put the anti-tip device M4 on the top, near theback side, and fix it with a screw M3.

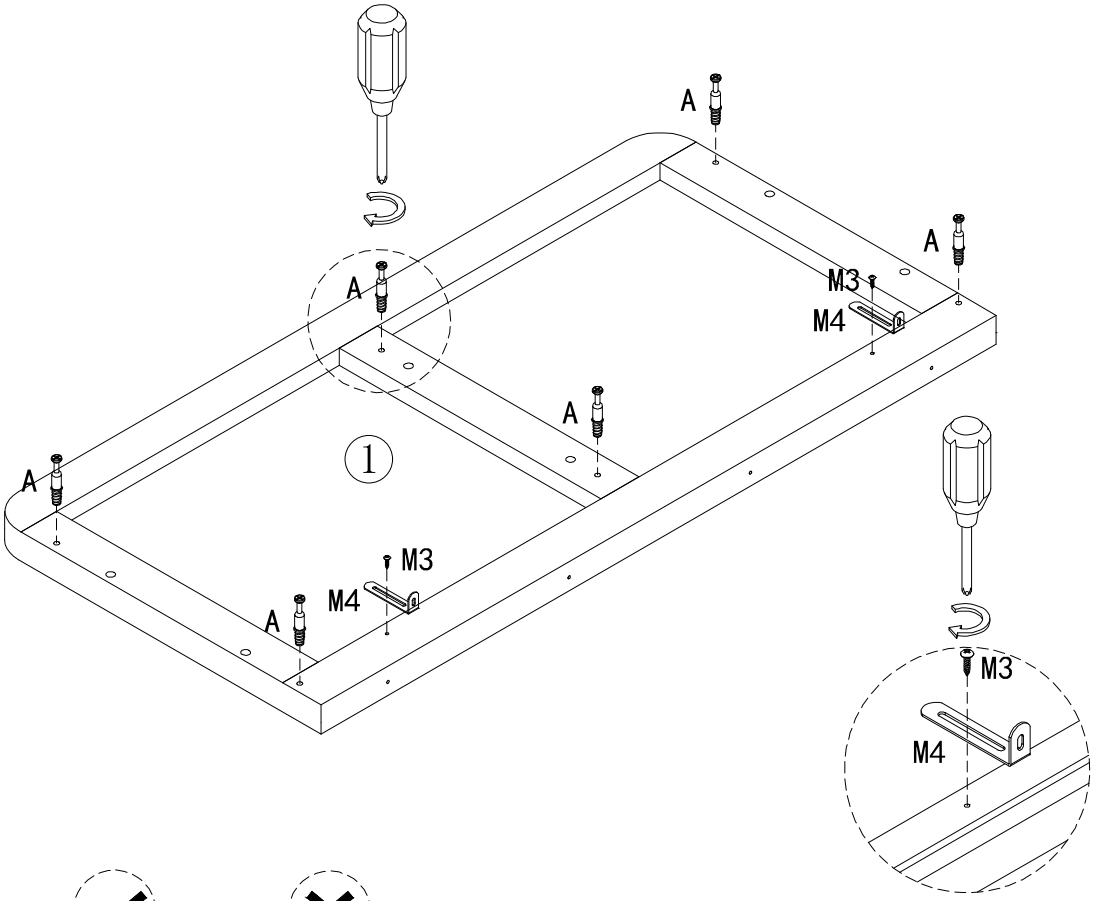

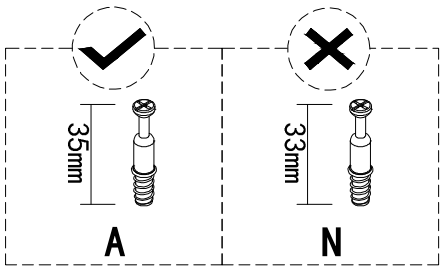

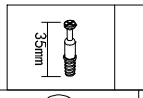

A X 6PCS

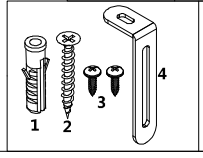

M X 2SET

STEP 13

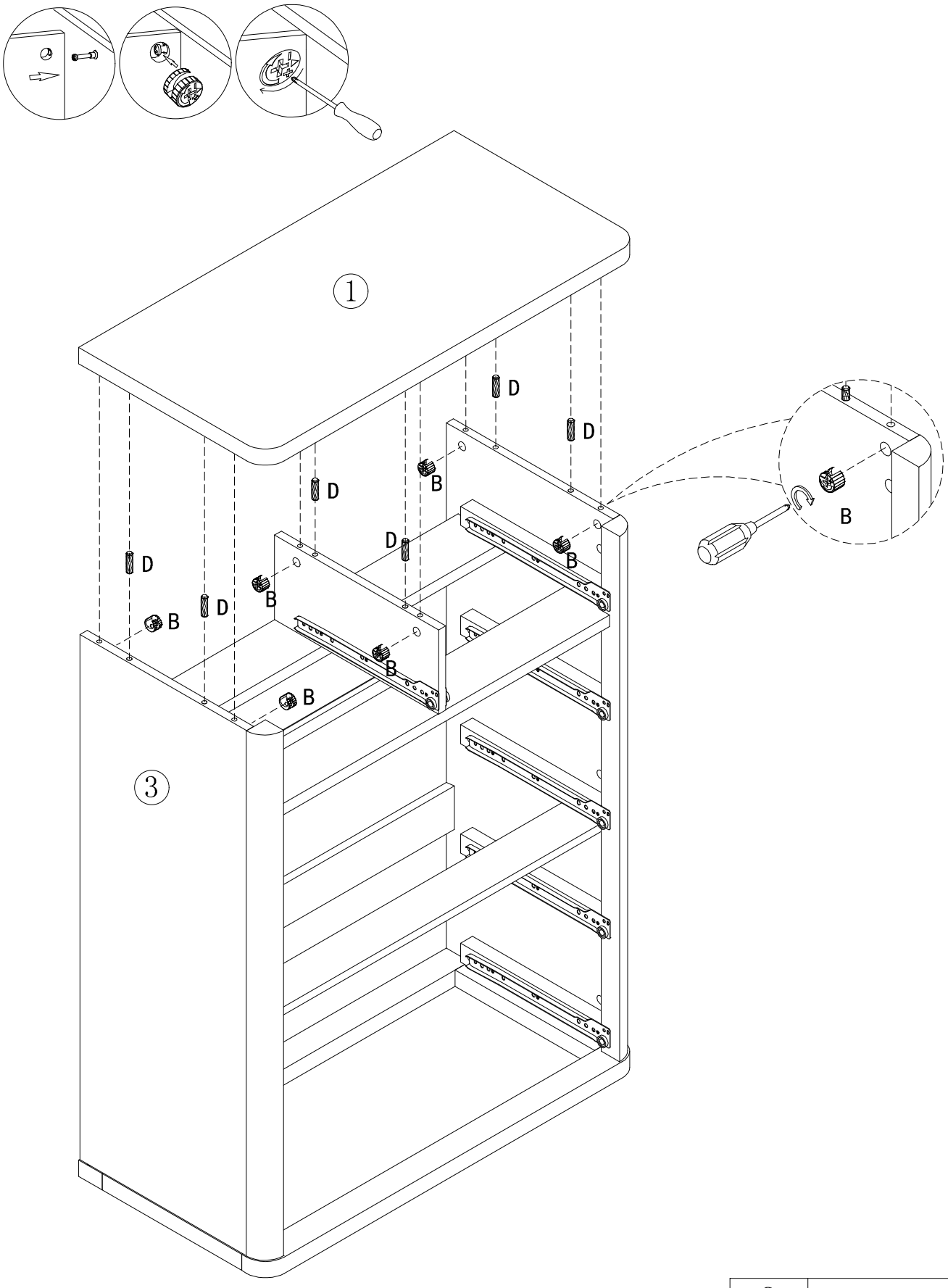

	D X 6PCS
	B X 6PCS

STEP 14

When installing the back panel, align and butt all panels tightly without gaps. Tighten the screws for fixation only after confirming there are no obvious gaps in between.

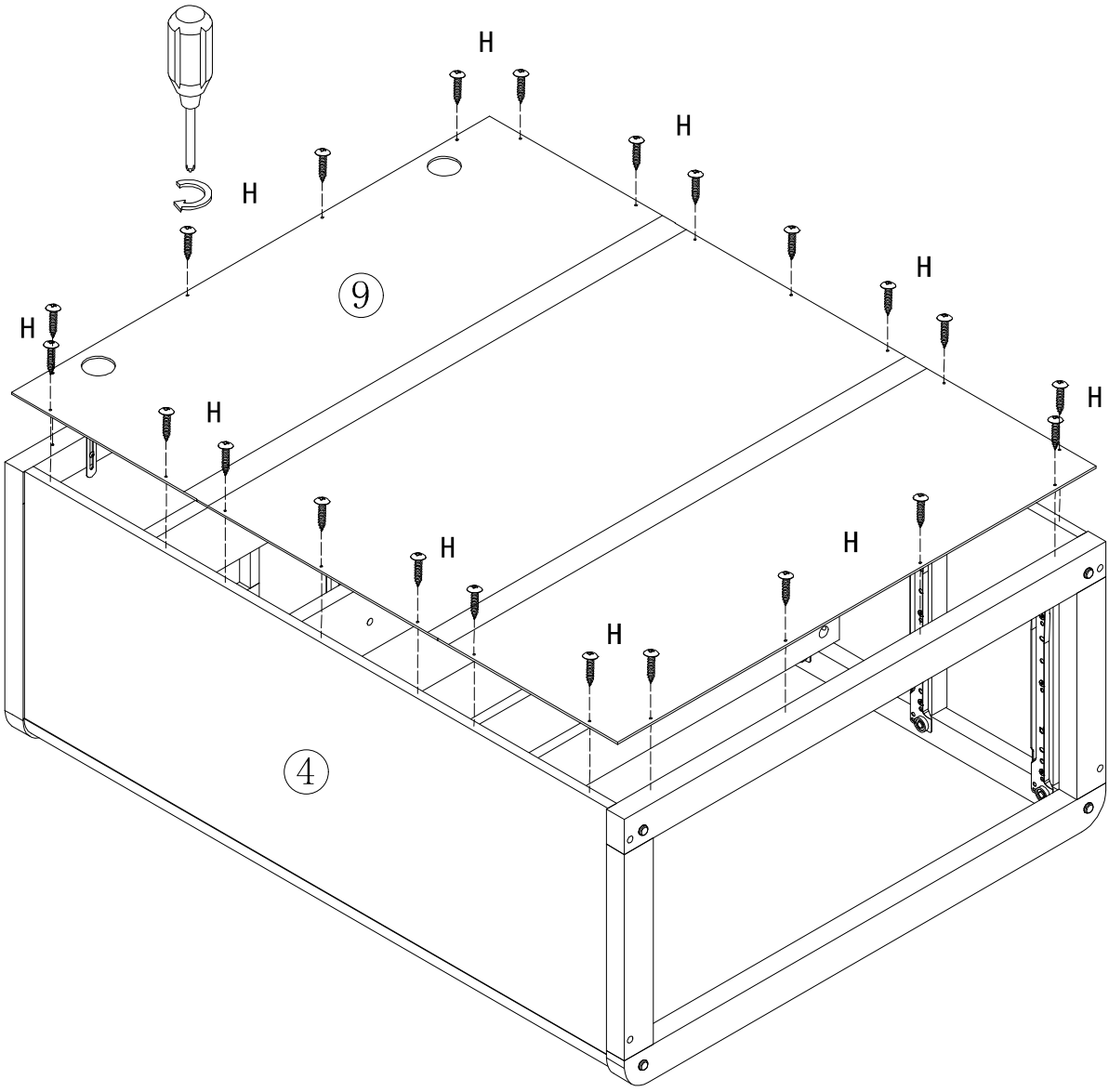

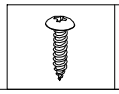

H X 22PCS

STEP 15

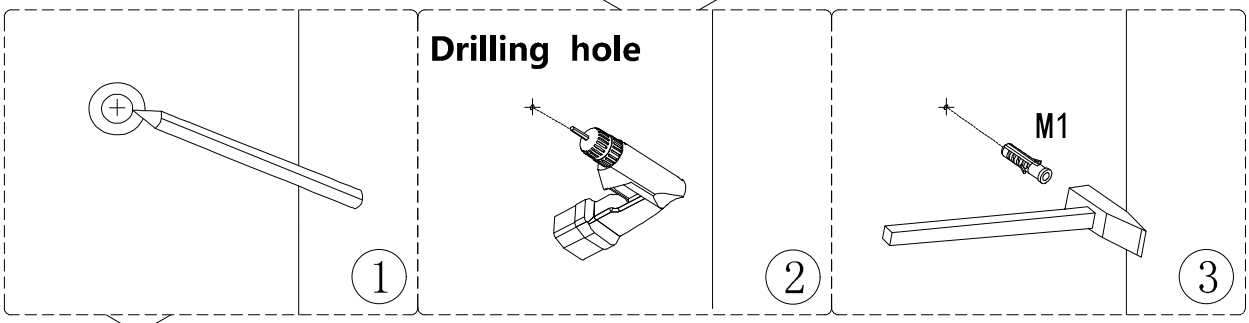

Drill a hole in the wall, then hammer the M1 into the wall with a hammer

Note: Follow step
Link M4 and M1 with a M2 using a screwdriver,and assembly it tightly.

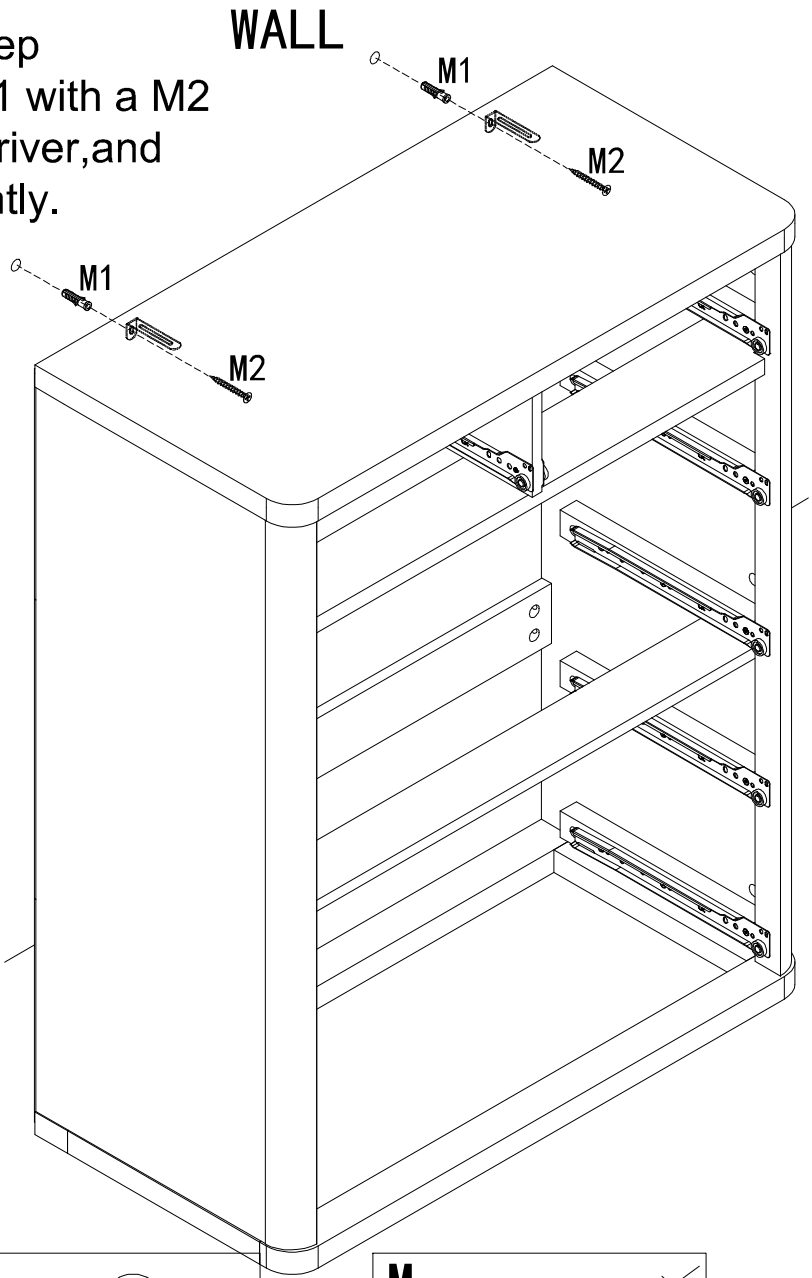

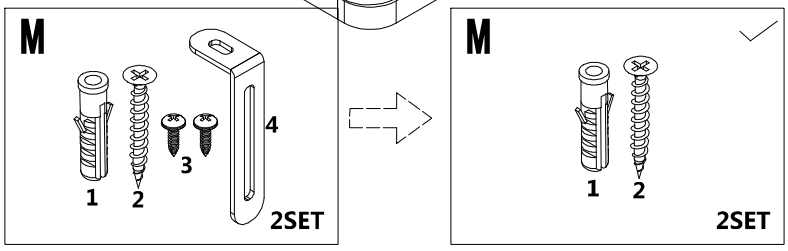

STEP 16

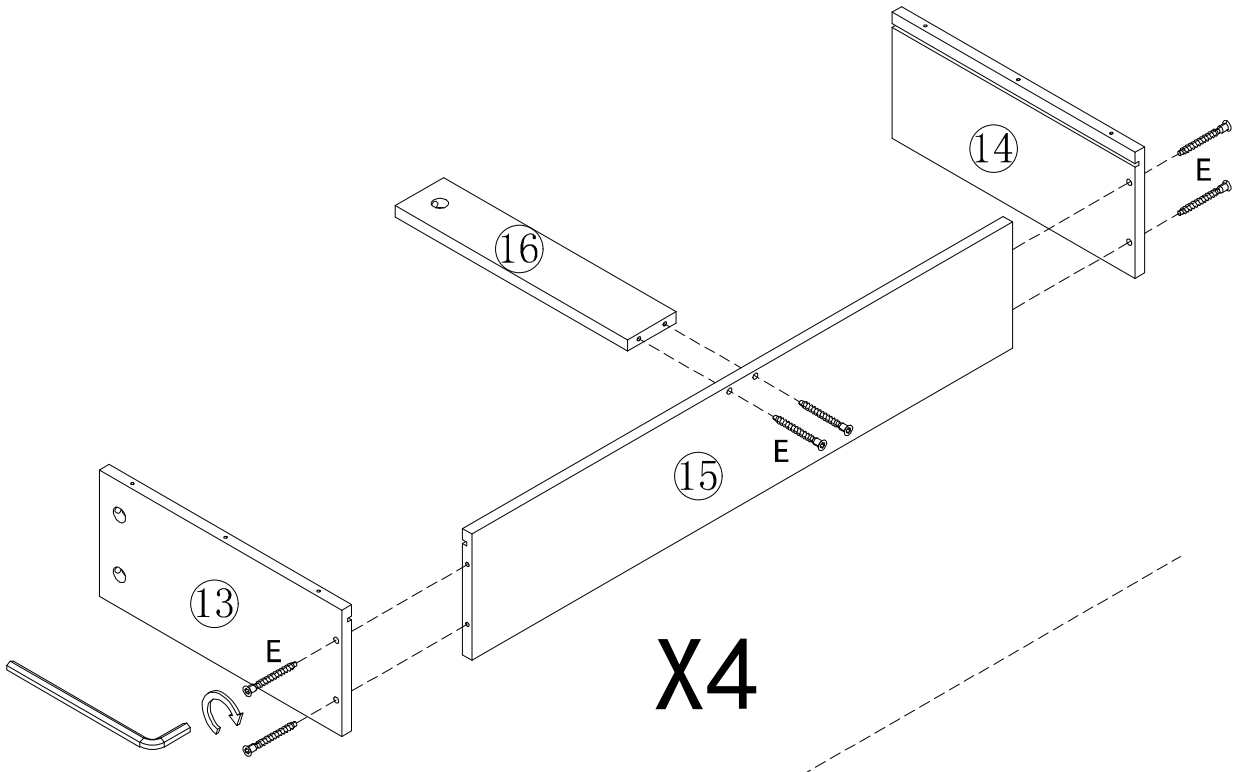

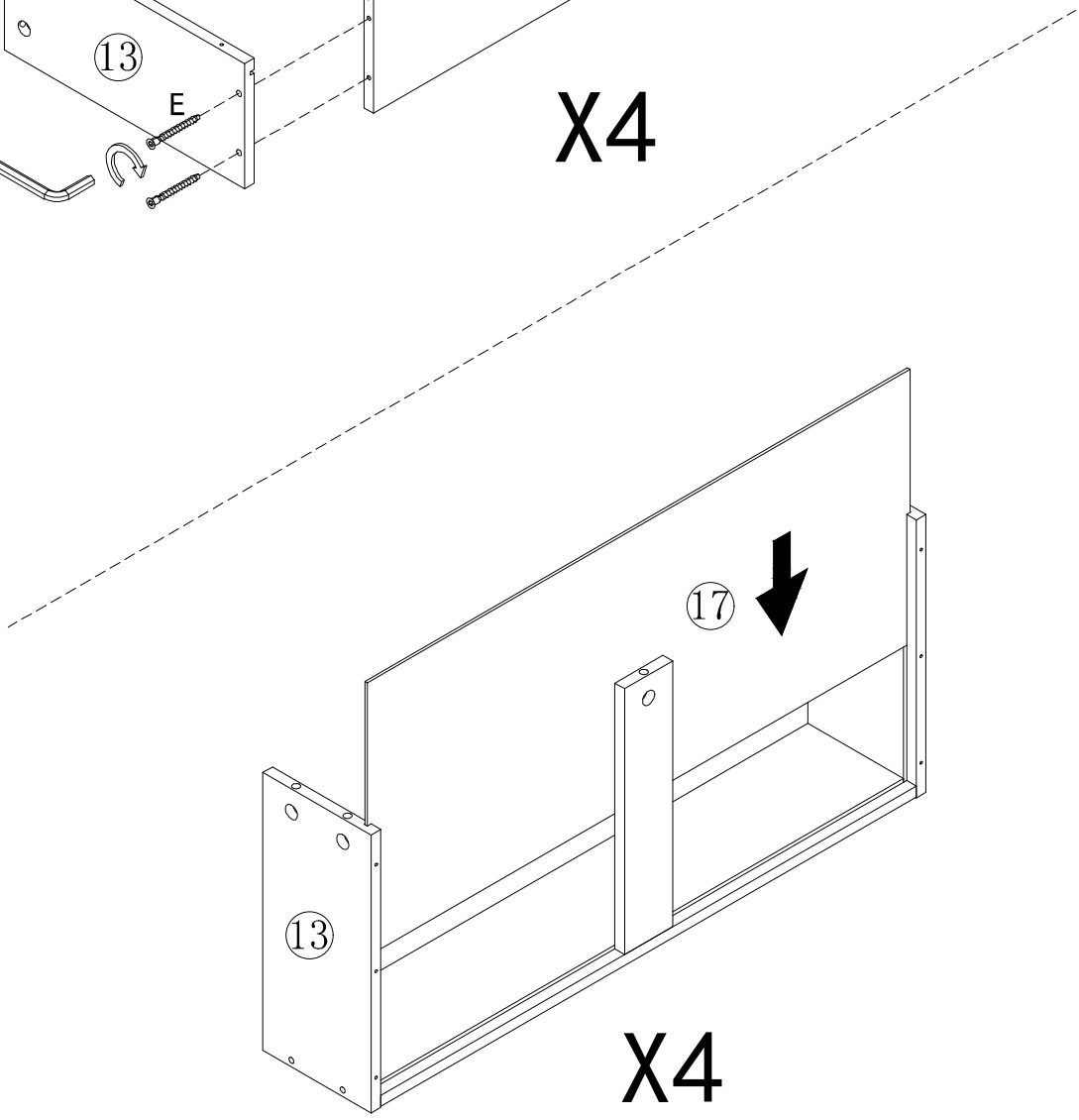

	E X 24PCS

STEP 17

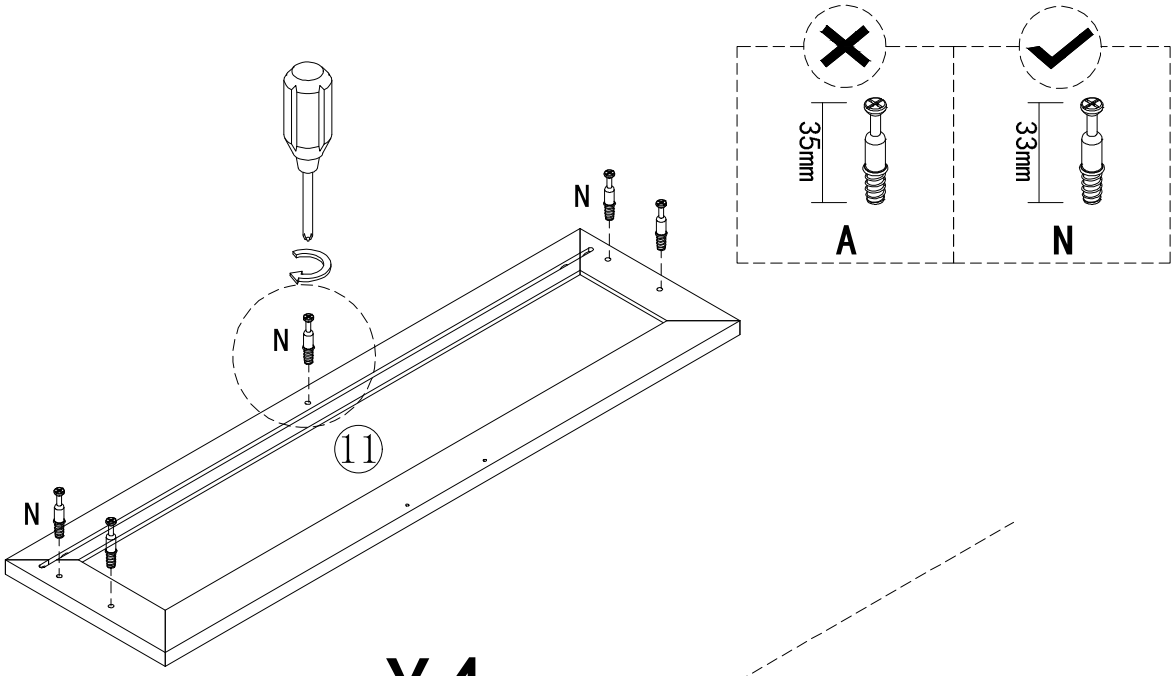

X4

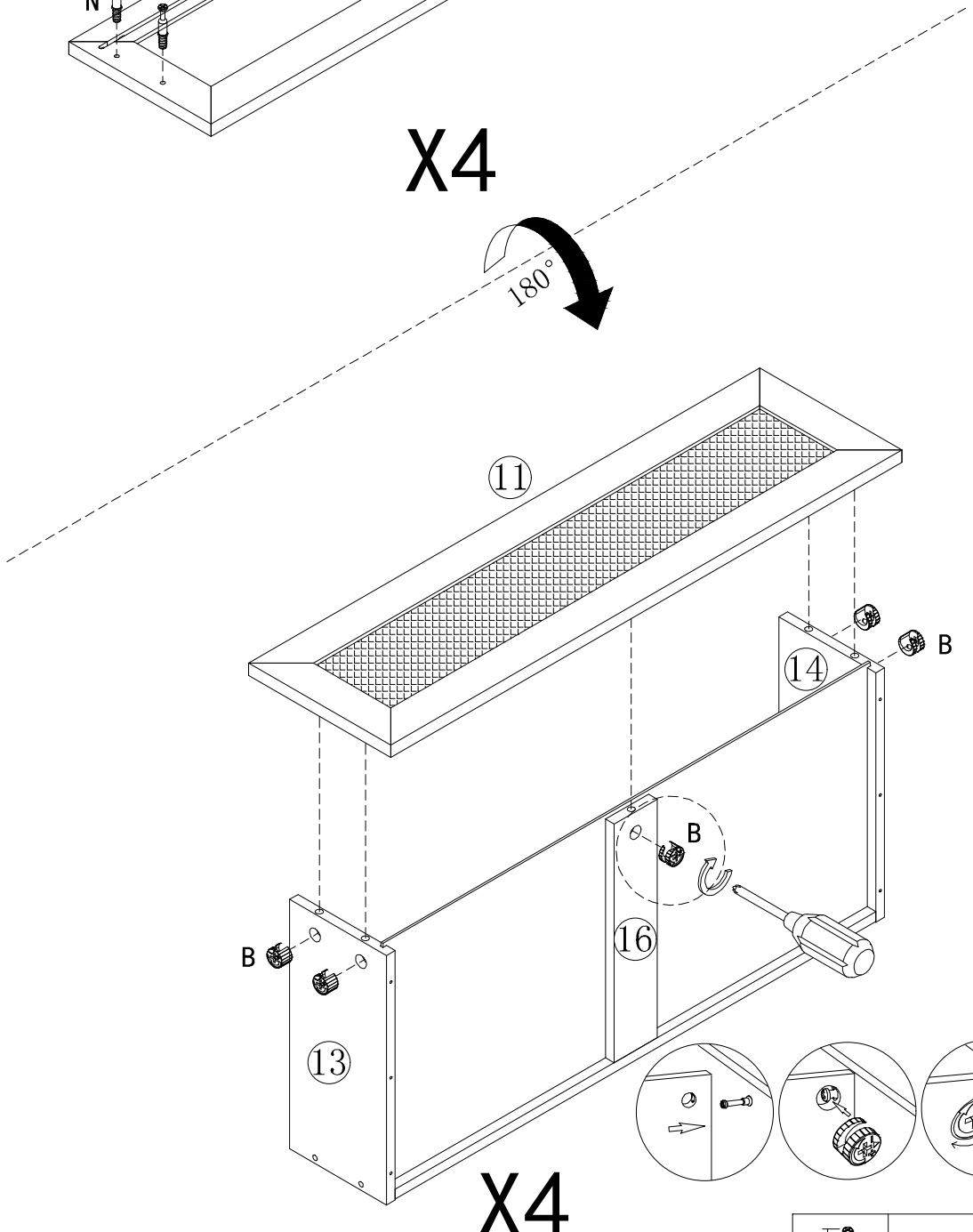

X4

N X 20PCS	
B X 20PCS	

STEP 18

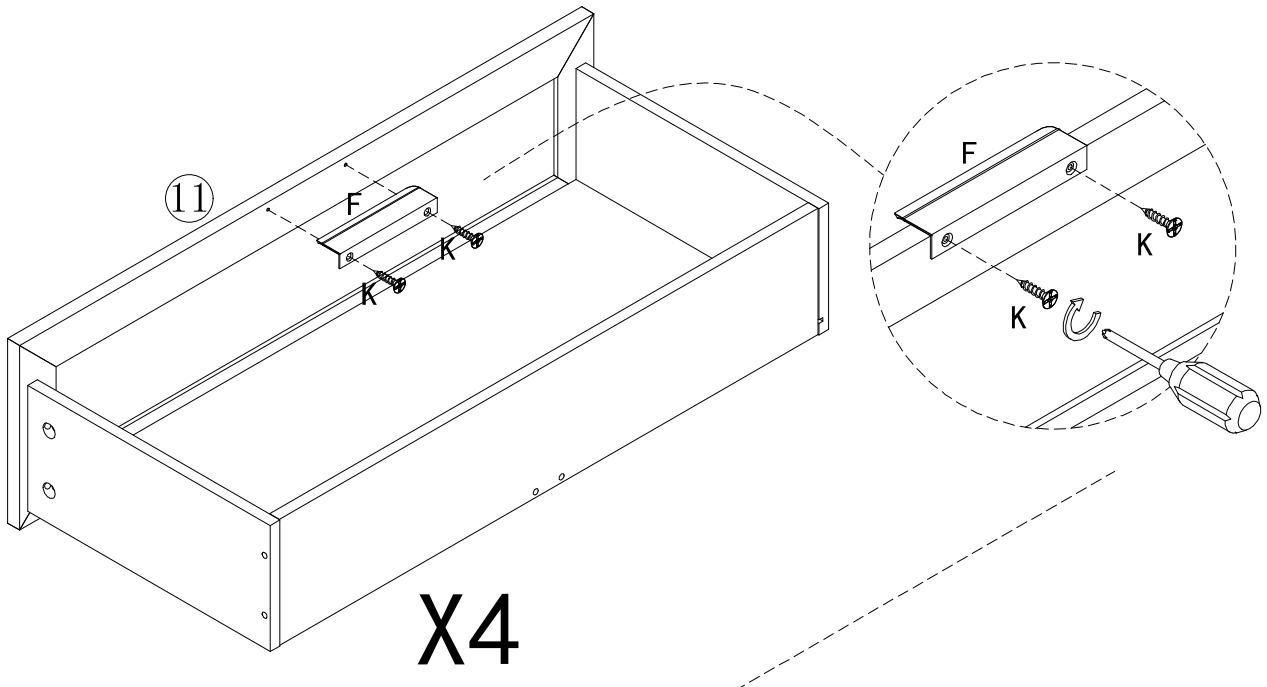

X4

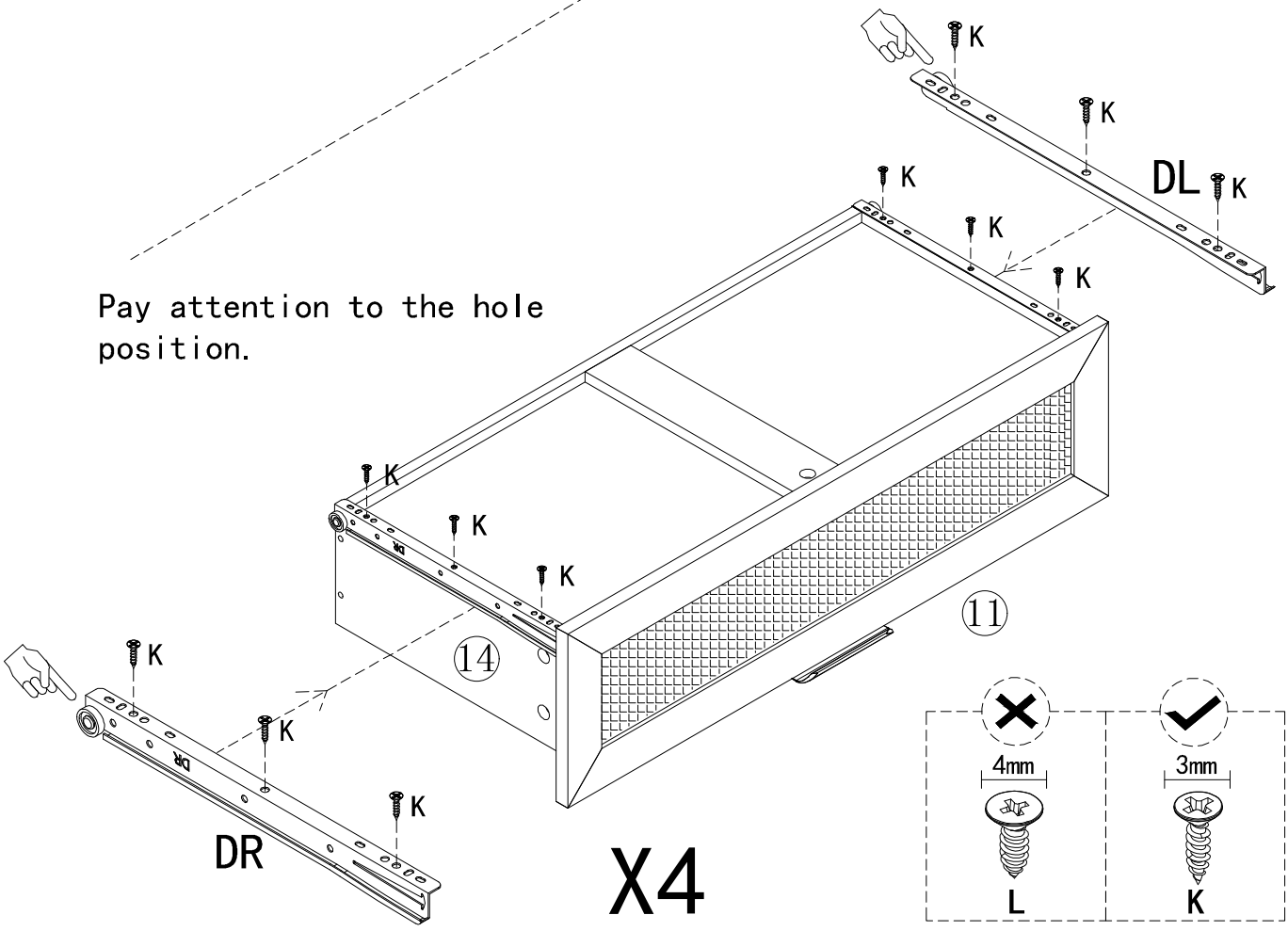

Pay attention to the hole position.

X4

	F X 4PCS
	K X 32PCS

STEP 19

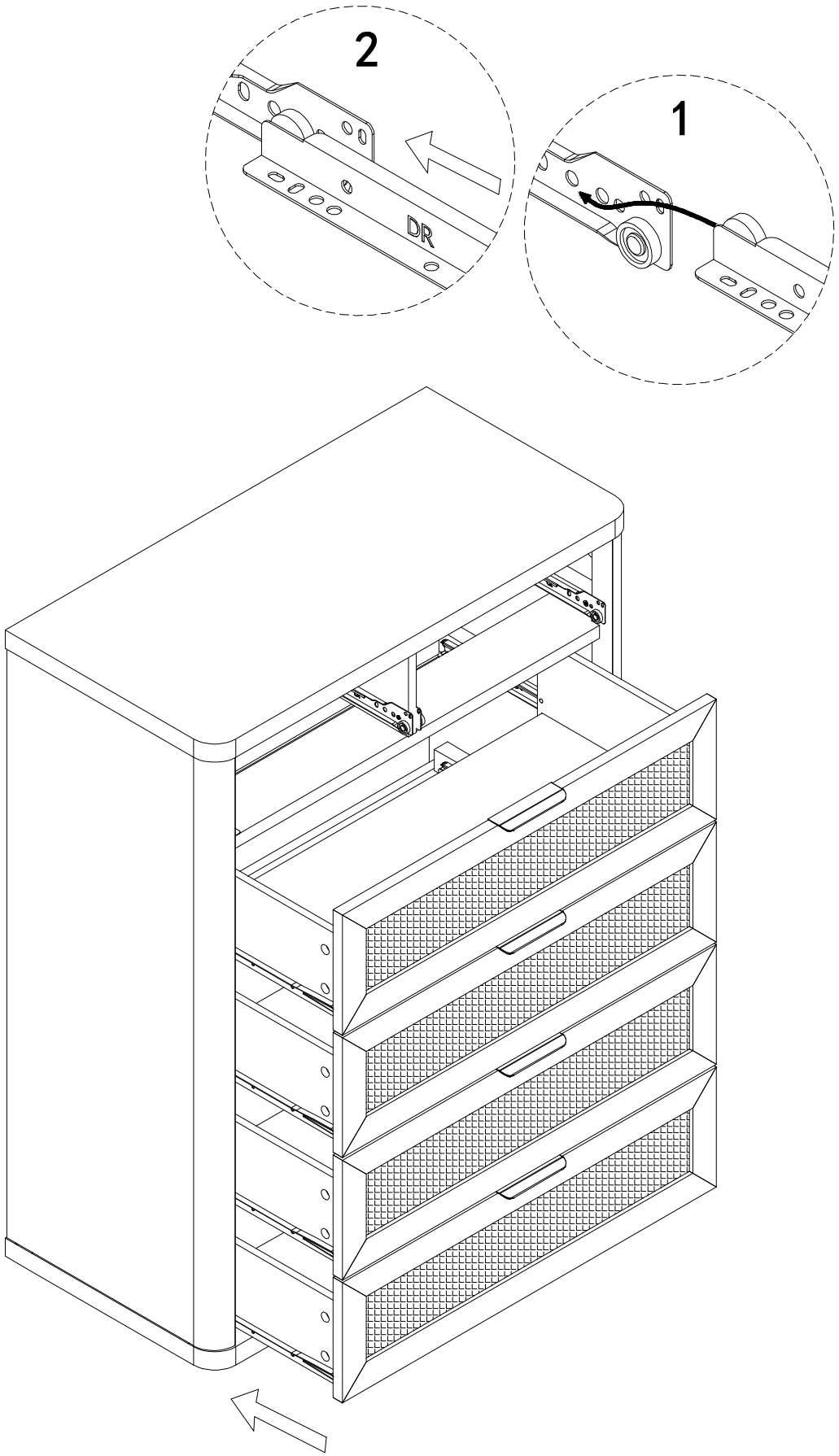

STEP 20

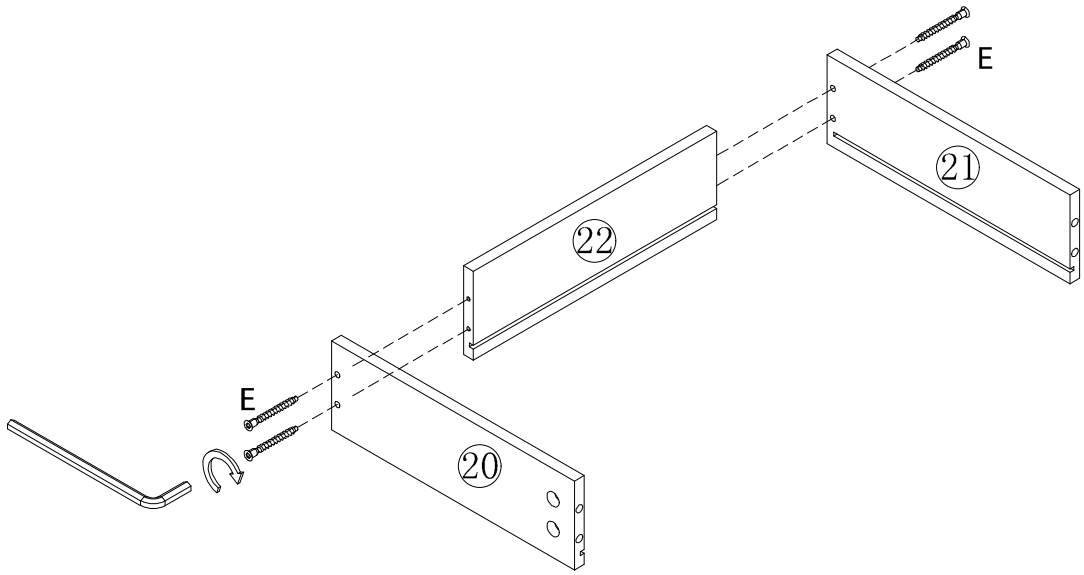

X2

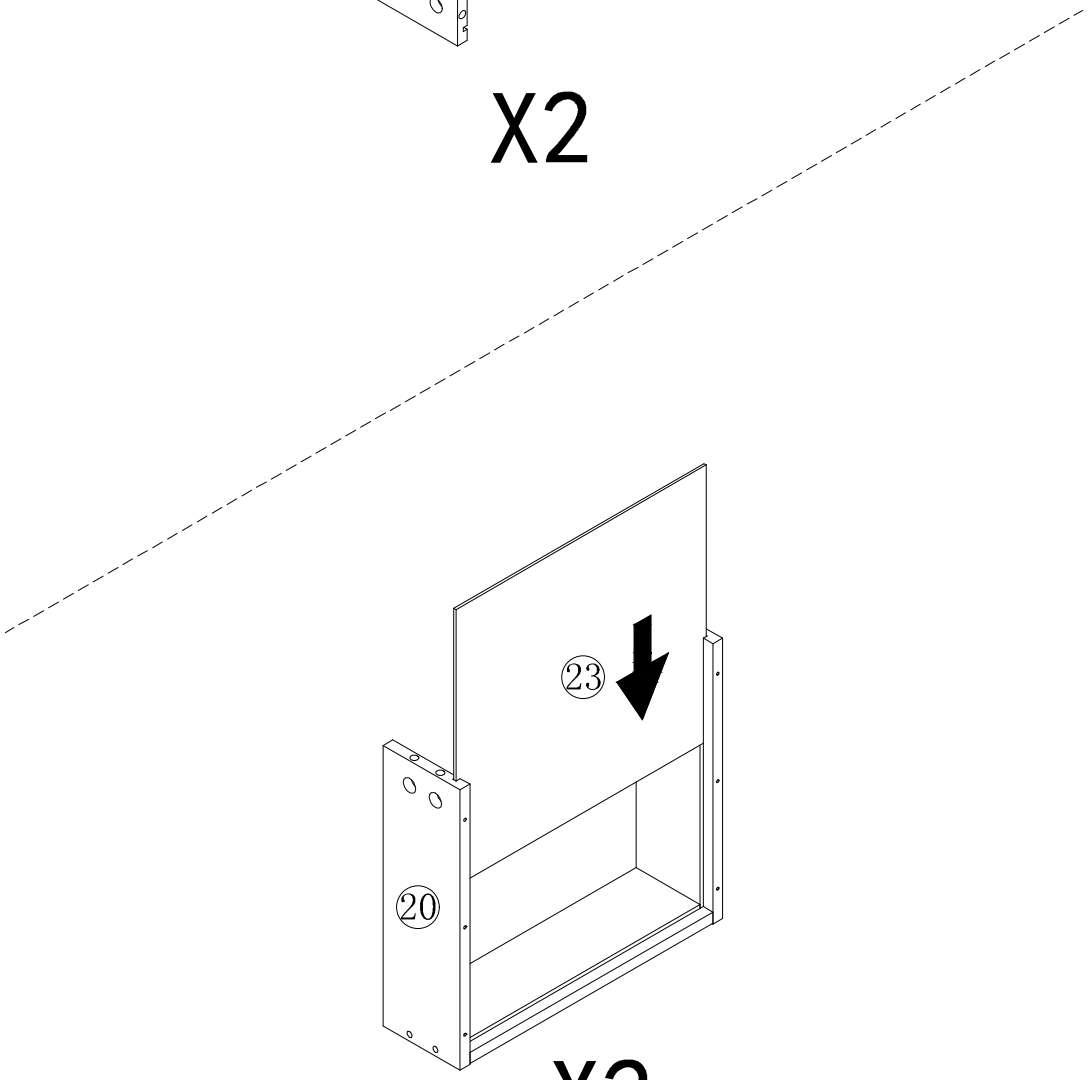

X2

	E X 8PCS

STEP 21

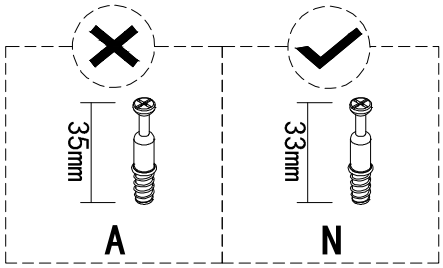

	N X 8PCS
	B X 8PCS

STEP 22

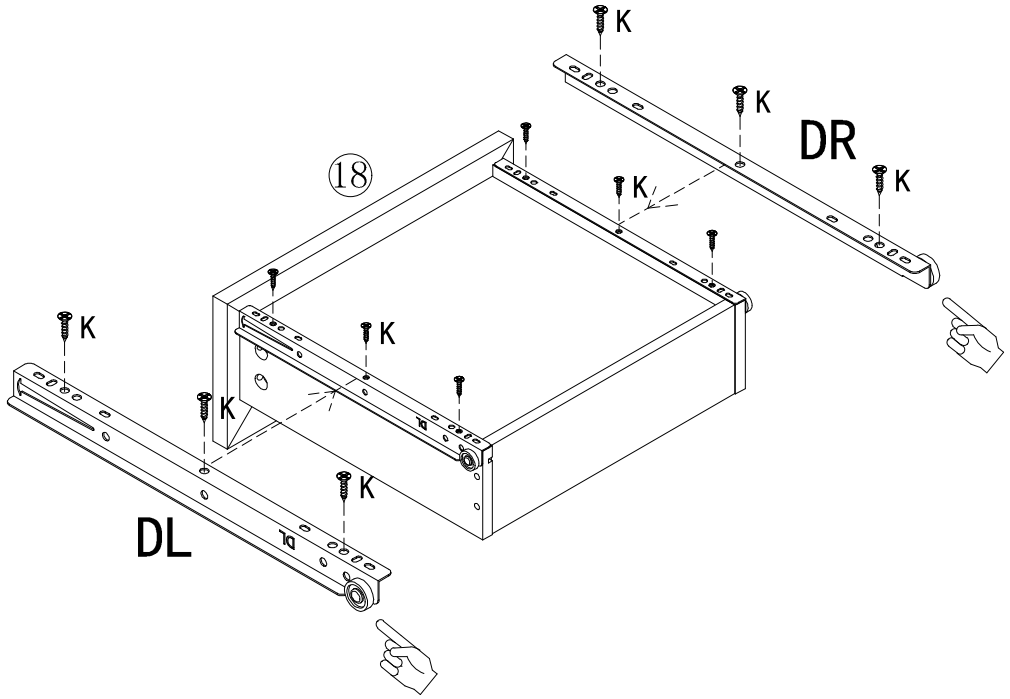

Pay attention to the
hole position.

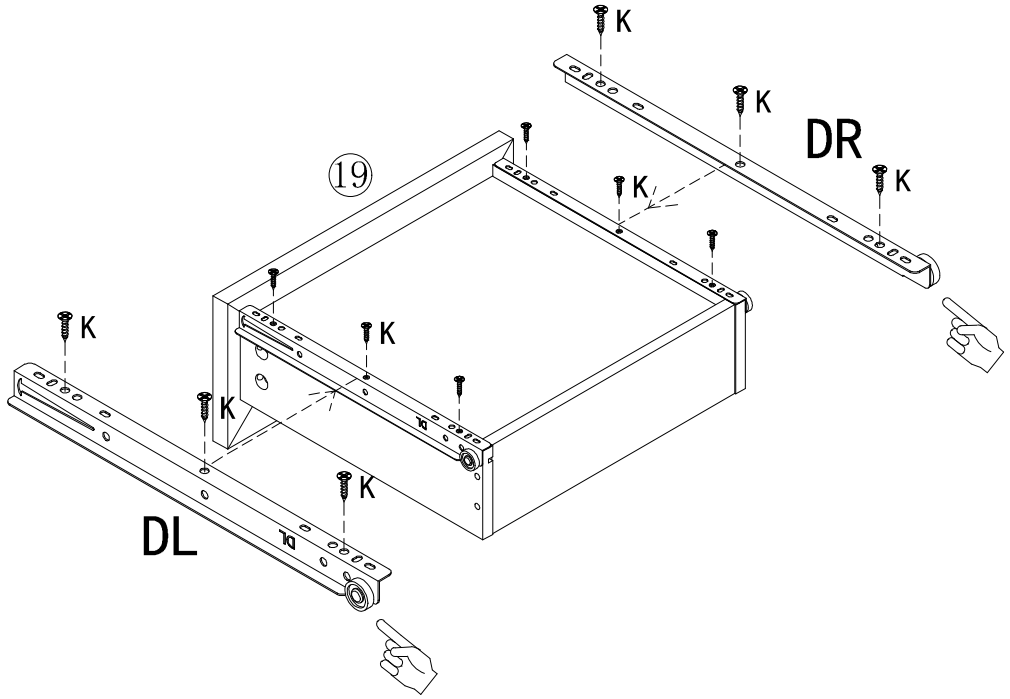

	K X 12PCS

STEP 23

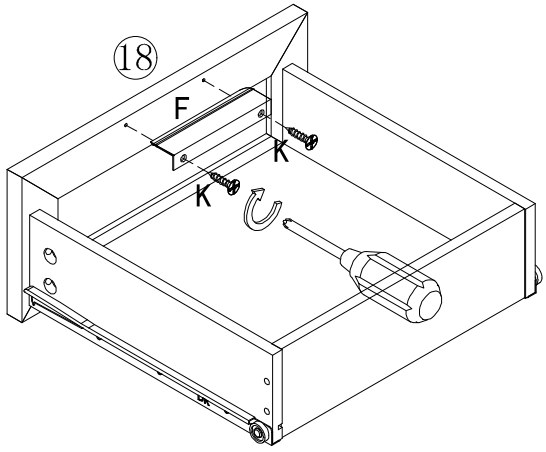

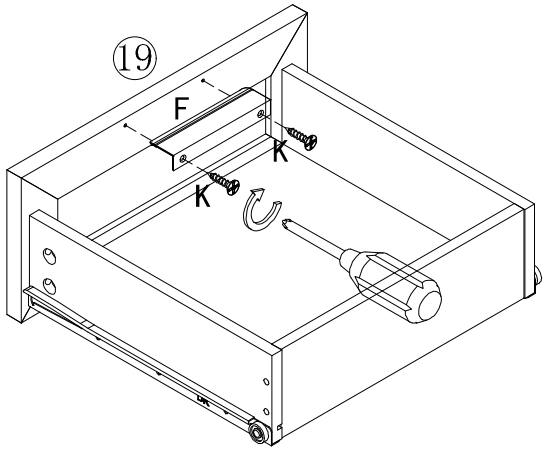

	F X 2PCS
	K X 4PCS

STEP 24

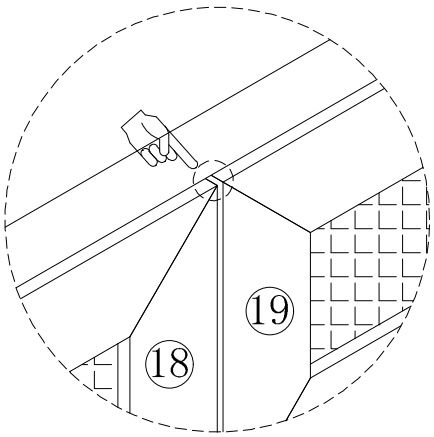

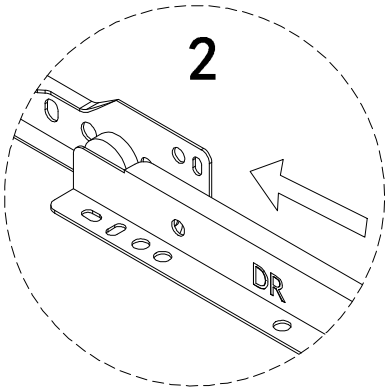

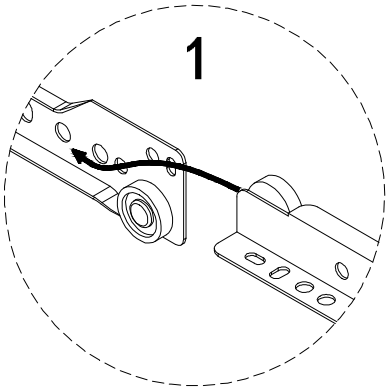

Note: Please insert the drawer into the corresponding position according to the number

