INSTRUCTION MANUAL

Dining Chair

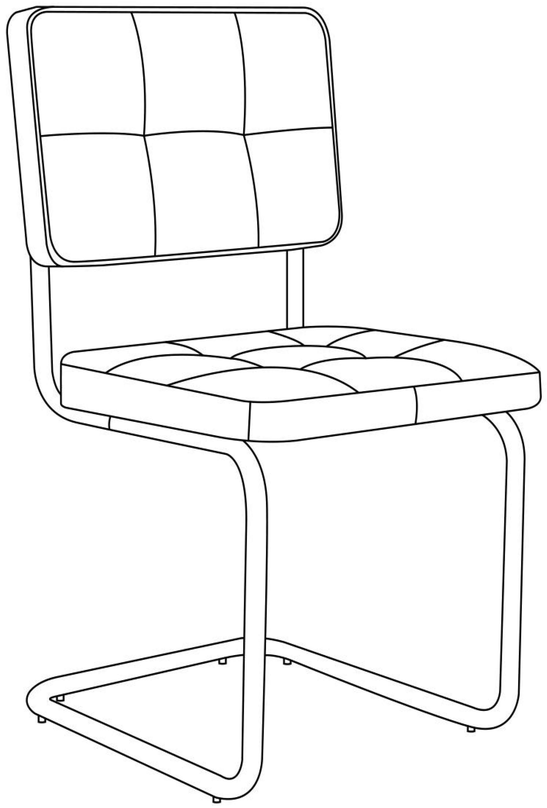

Please read the Manual carefully before operation. If the parts were missed or damaged, please contact us on or by after-sale e-mail. We will reply and solve the problem for you in 24 hours.

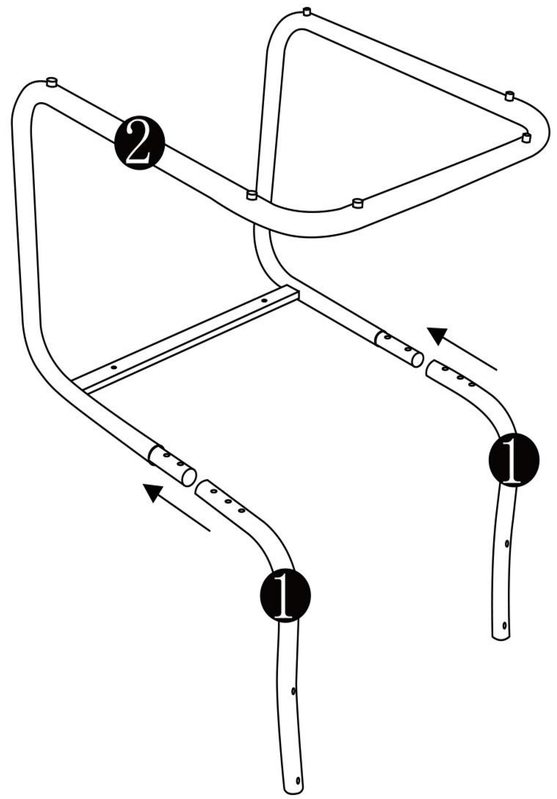

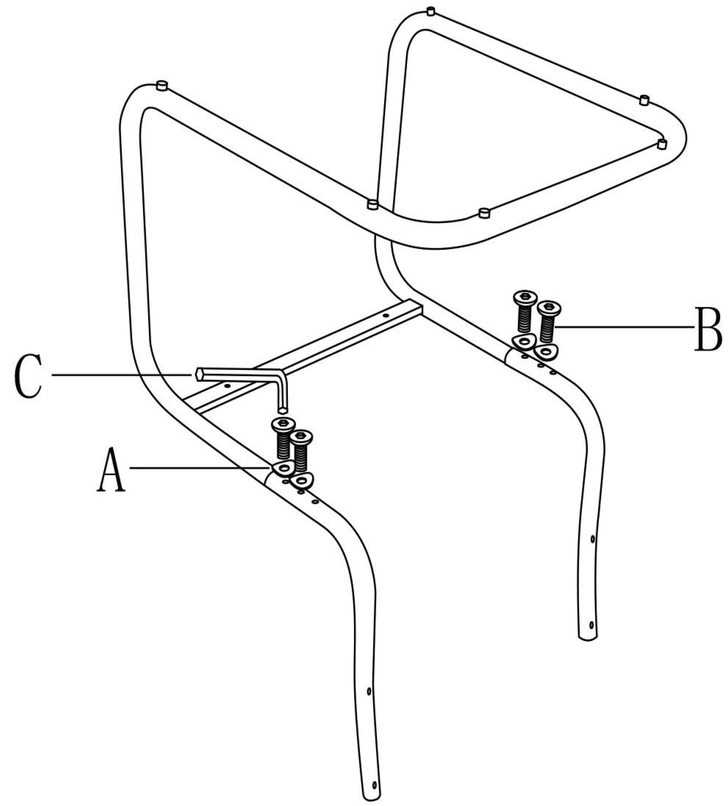

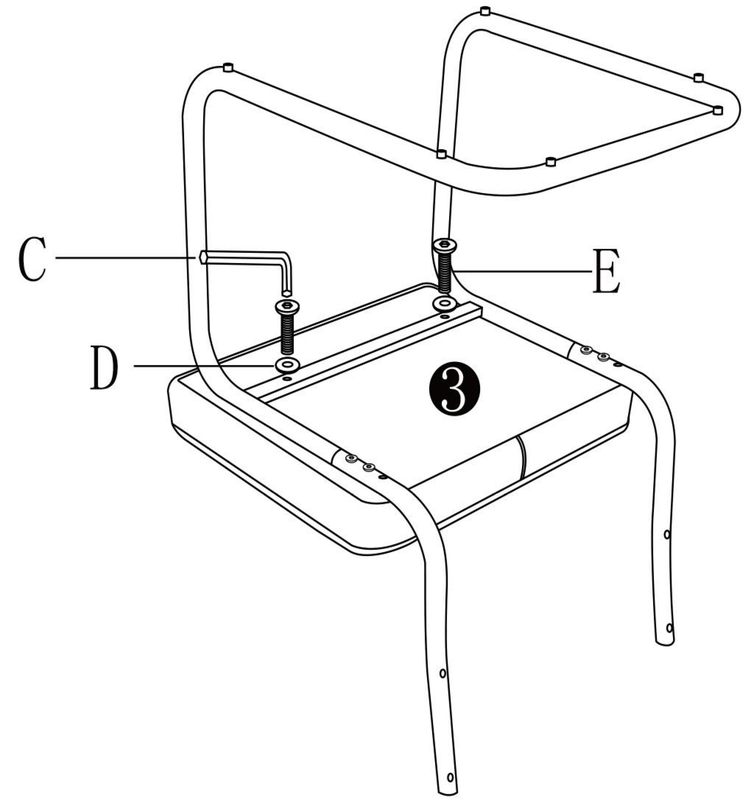

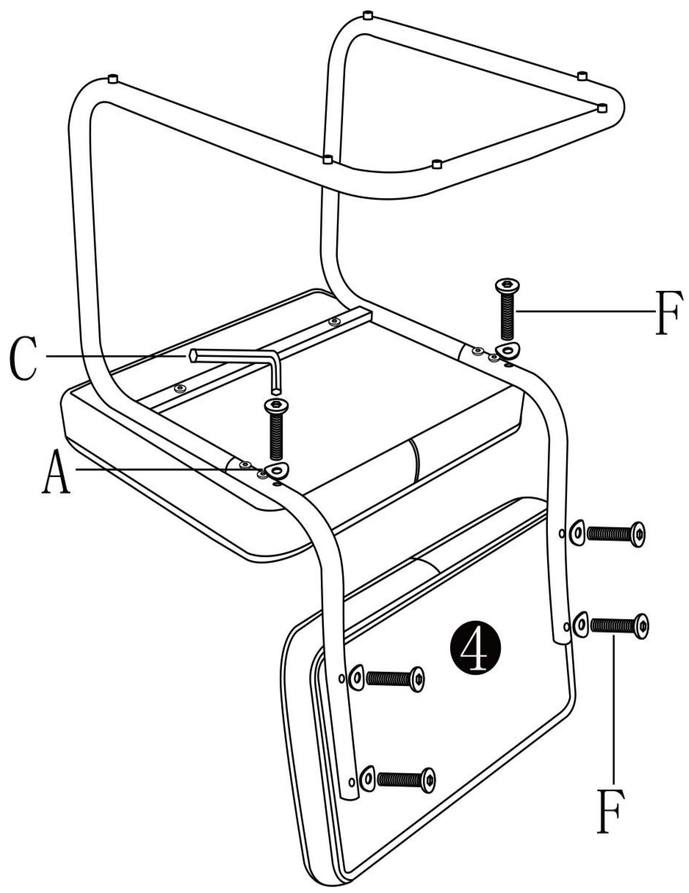

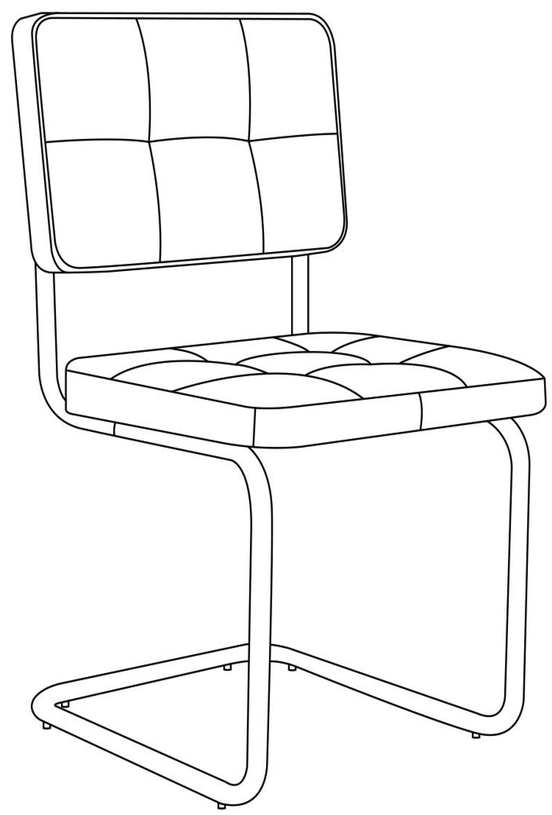

1	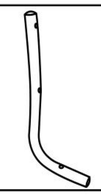	x2	2	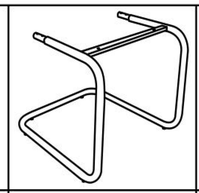	x1
3		x1	4	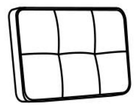	x1
A	M 6xΦ16x1.0m m	x10	B	M6x16mm	x4
C	#5	x1	D	M 6xΦ16x1.0m m	x2
E	M6x25mm	x2	F	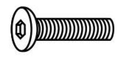 M6x40mm	x6

CONTACT US !

Please don't return the product directly!

Contact our friendly customer service team first for help.

①

②

Platform after-sale message

Contact with our after-sale service, pls send the order No. andrelated pictures to us.

We will reply you within 24 hours, and solve the problem ASAP.