USER MANUAL

SOCCER GOAL

SIZE:

- ■ **6FT X 4FT**
- ■ **8FT X 5FT**
- ■ **10FT X 6.5FT**
- ■ **12FT X 6.5FT**

⚠ WARNING

CHOKING HAZARD-Small parts. Not for Children under 3 years old.

- Please read the instructions carefully.
- Please keep the instructions and the packaging for future needs.
- This product must be assembled by adults.
- This product is only for domestic use.
- This product is not for commercial/public use.
- The use of the product requires certain capabilities and skills.
- Not suitable for children under 3 years old due to small parts. Choking hazards!
- Warning: Do not climb on the goal frame or net or hang from the goal posts.
- There is a serious risk of injury!
- Adult supervision is needed all the time during children use the product.
- No liability is assumed for damages resulting from incorrect application of the instruction manual.

6FT X 4FT

1 Contents

Contents	6FT X 4FT	8FT X 5FT	10FT X 6.5FT	12FT X 6.5FT
Goal posts	16	18	18	20
Goal net	1	1	1	1
Foam tubes pre-assembled	3	5	5	6
Foam tubes-long	6	6	6	6
Foam tubes-short (opening on back)	2	2	2	2
Ground pegs	5	6	7	10

2 Goal frame assembly

Goal frame construction as following:

★ 6FT X 4FT

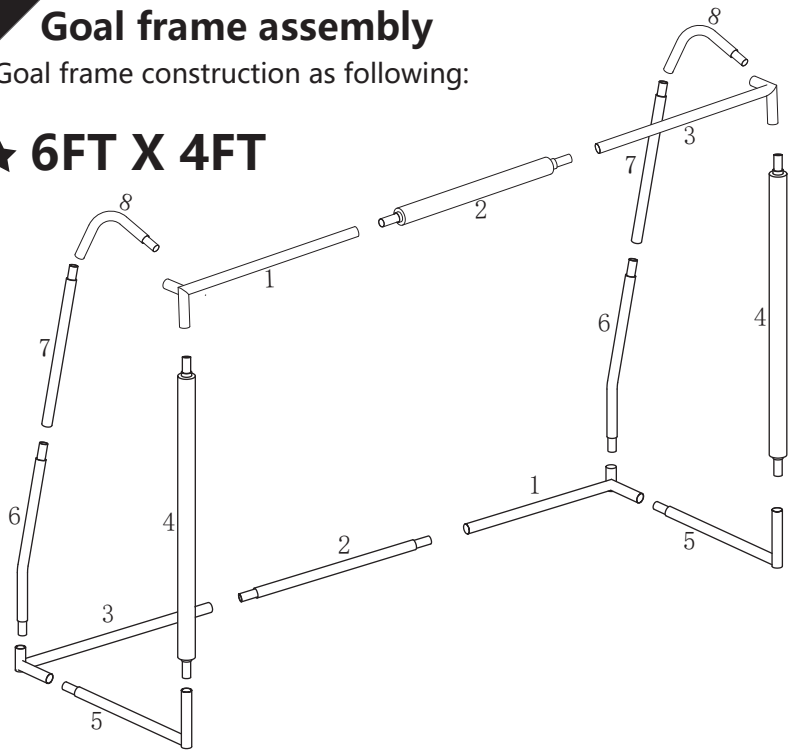

ASSEMBLY INSTRUCTIONS

Step 1

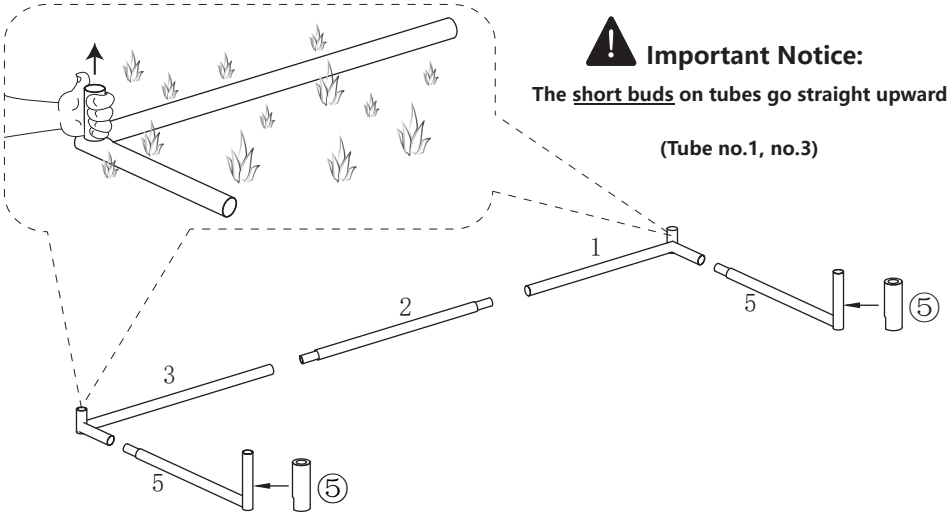

Important Notice:

The <u>short buds</u> on tubes go straight upwards.

(Tube no.1, no.3)

Step 2

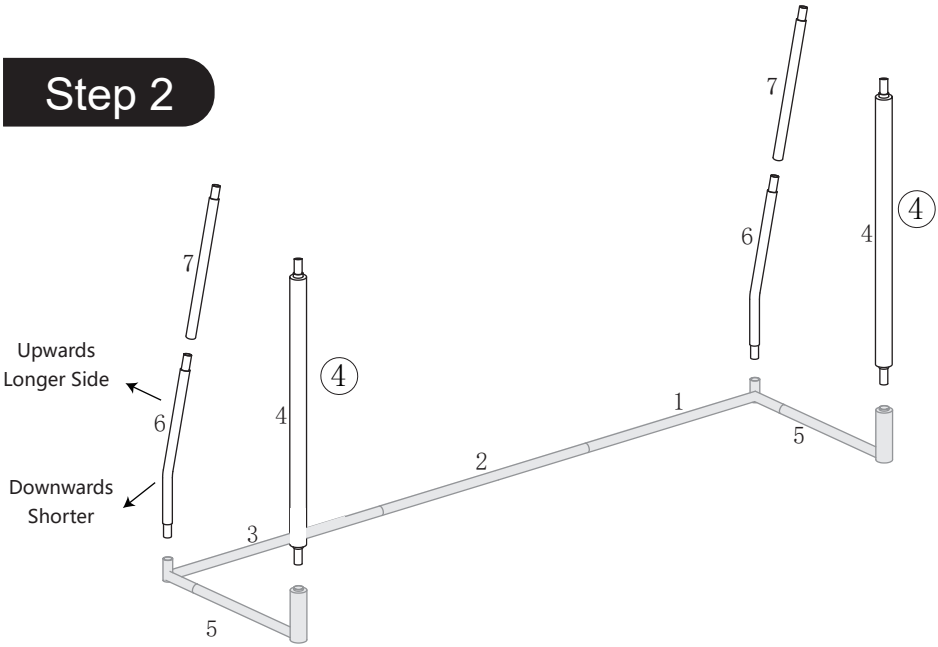

6FT X 4FT

Step 3

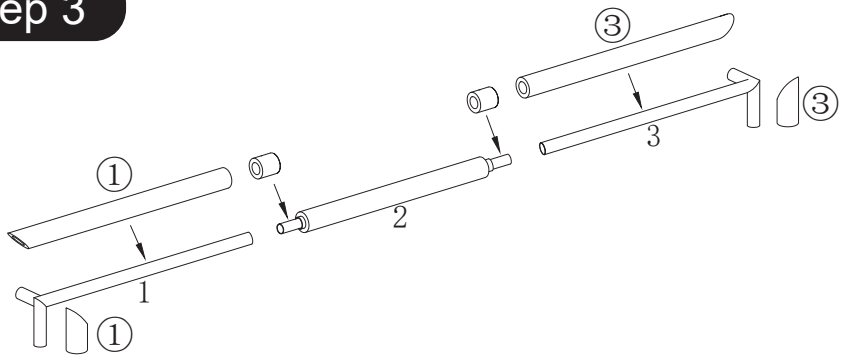

Step 4

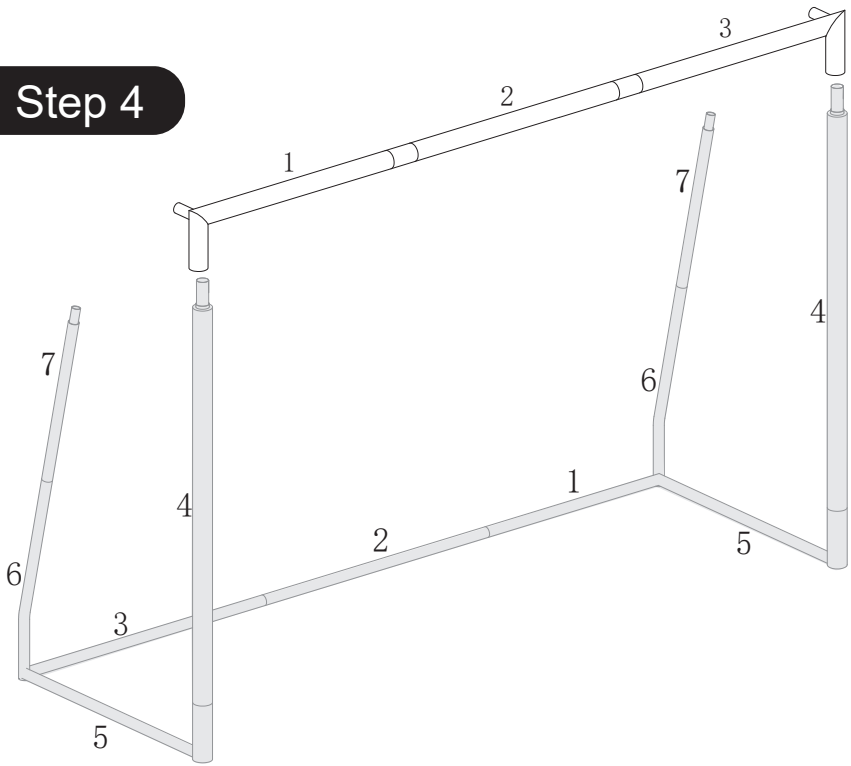

ASSEMBLY INSTRUCTIONS

Step 5

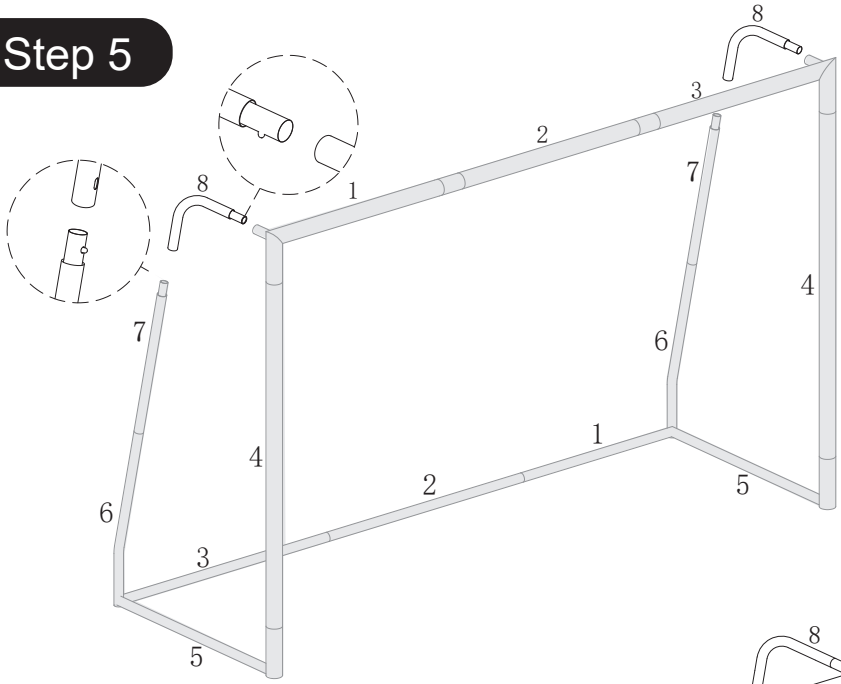

Step 6

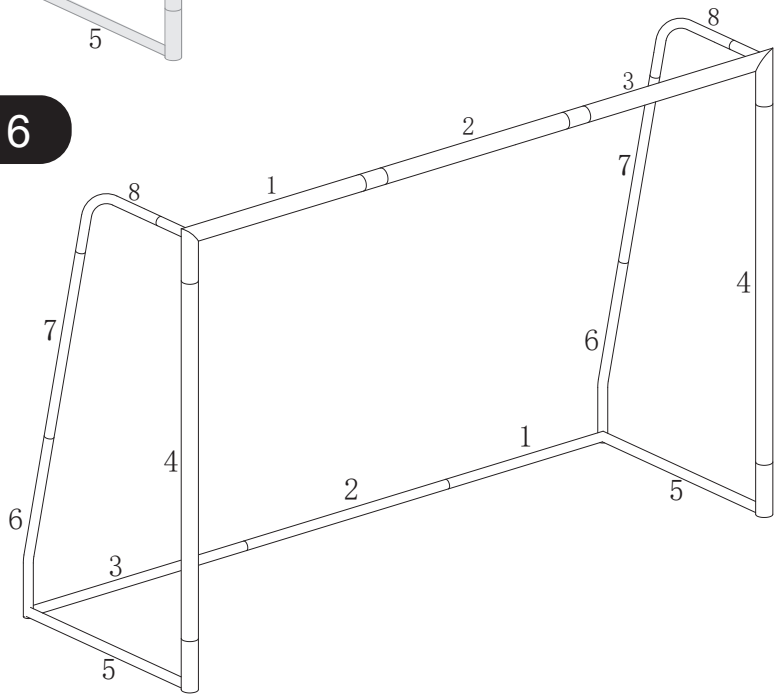

8FT X 5FT/10FT X 6.5FT

★ 8FT X 5FT
10FT X 6.5FT

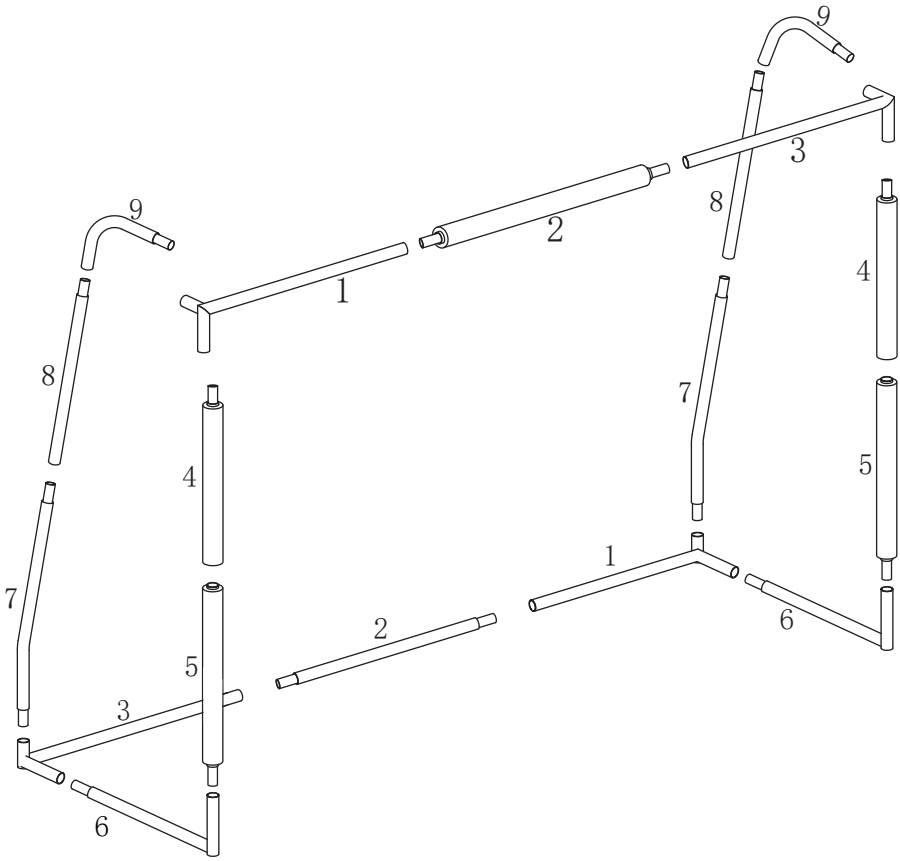

ASSEMBLY INSTRUCTIONS

Step 1

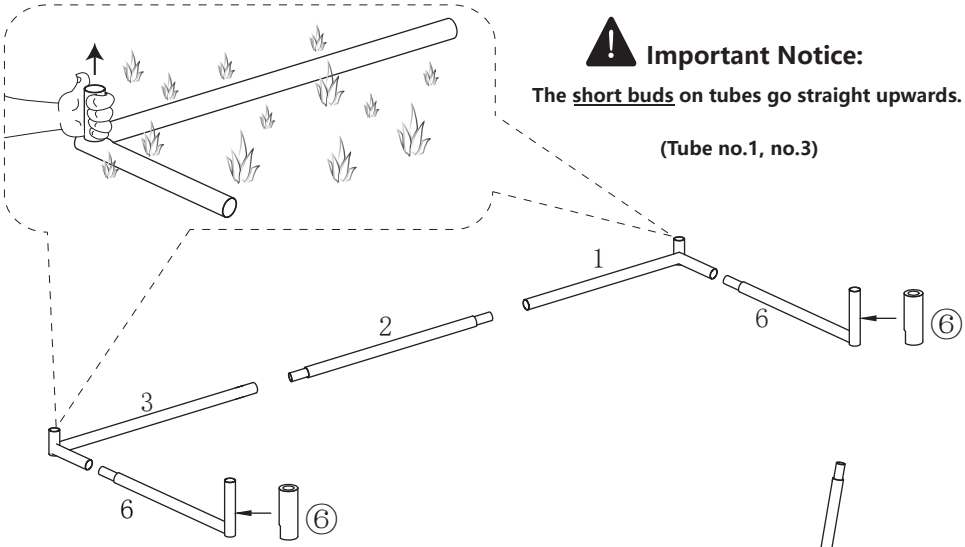

Important Notice:

The short buds on tubes go straight upwards.

(Tube no.1, no.3)

Step 2

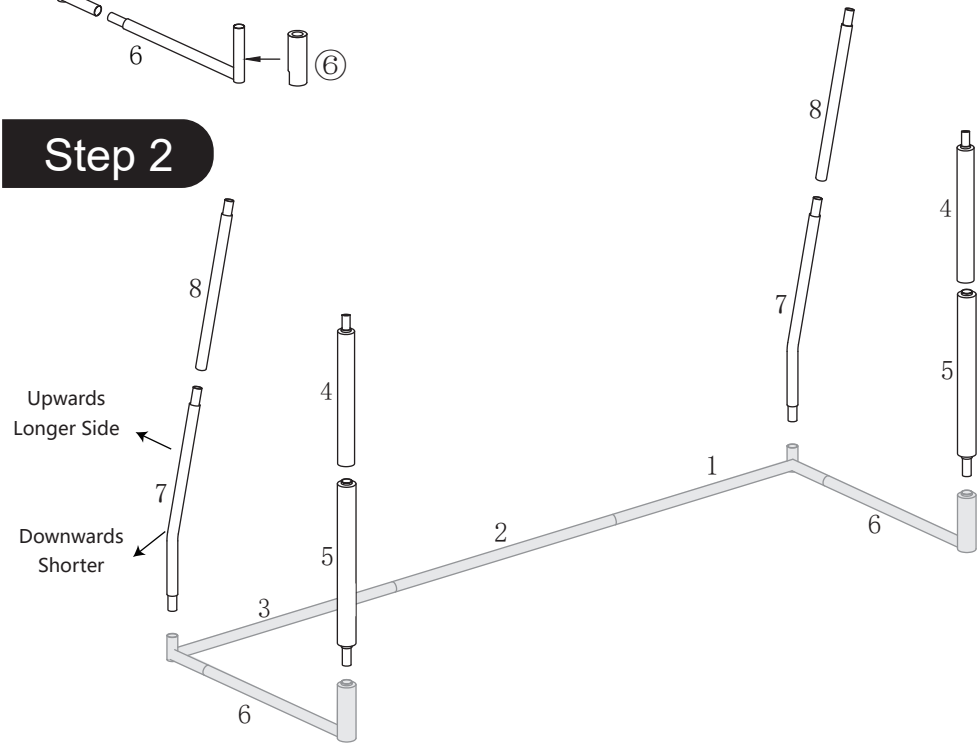

8FT X 5FT/10FT X 6.5FT

Step 3

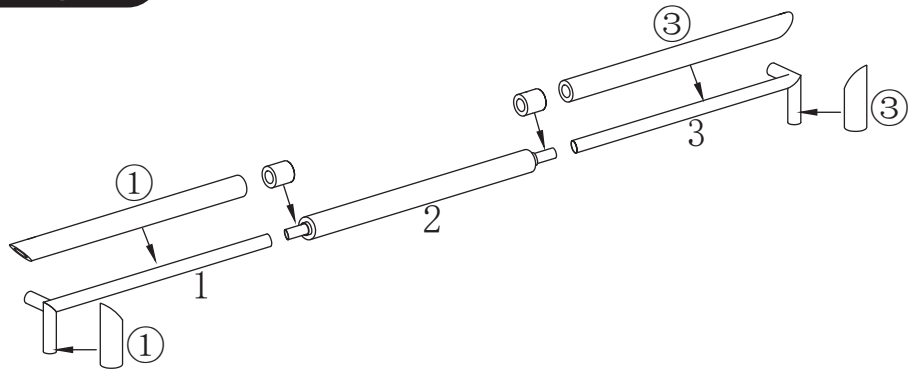

Step 4

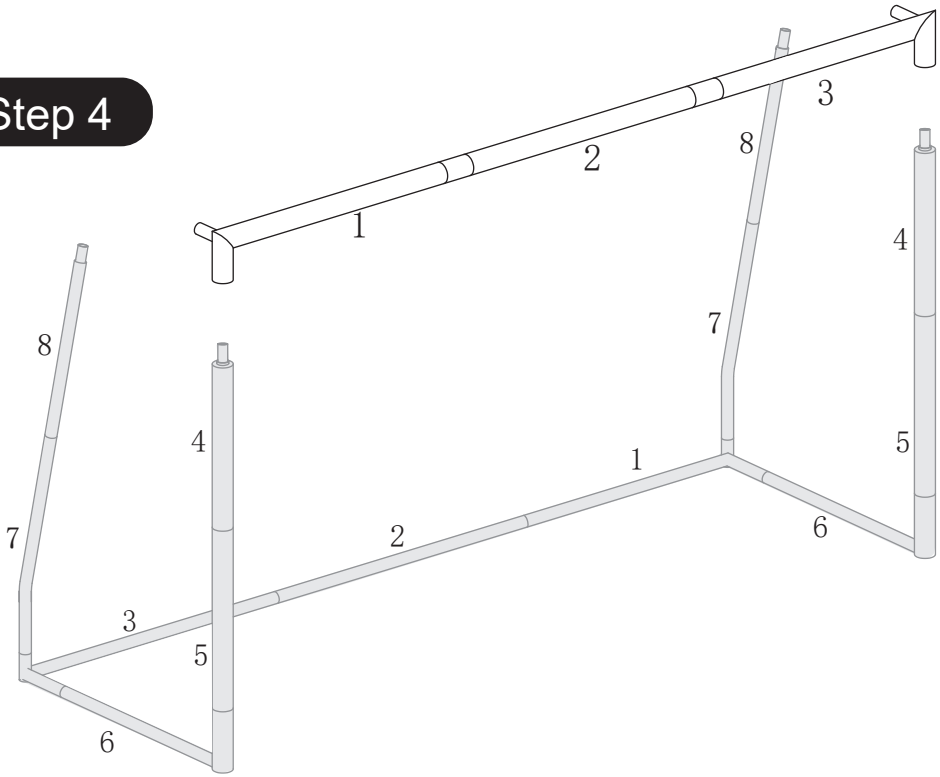

ASSEMBLY INSTRUCTIONS

Step 5

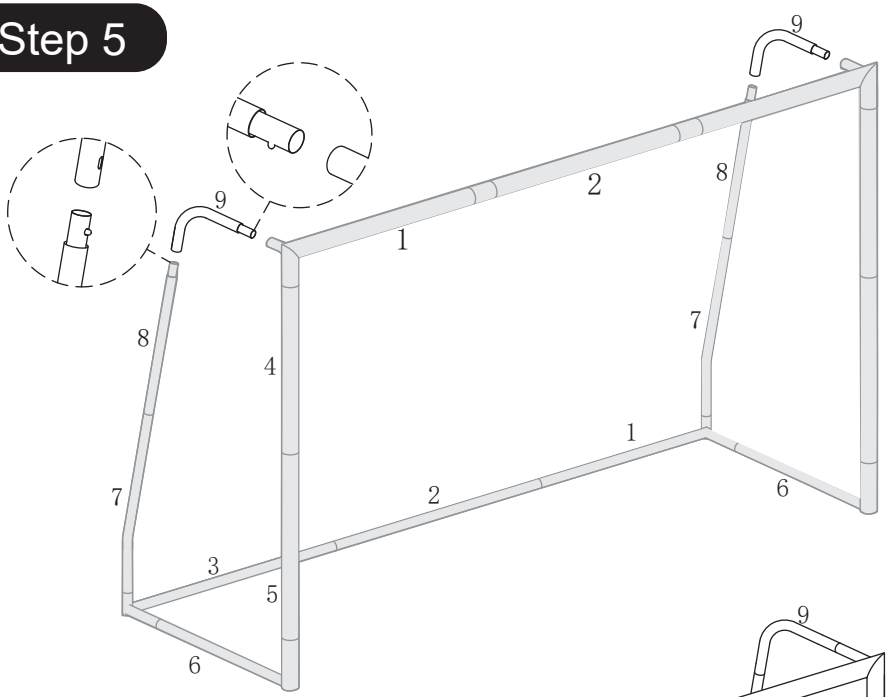

Step 6

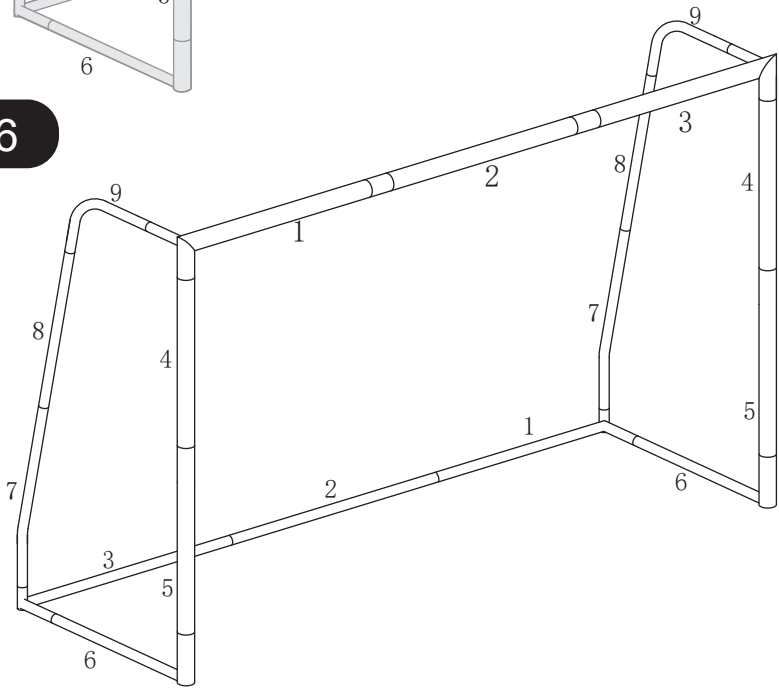

12FT X 6.5FT

★ 12FT X 6.5FT

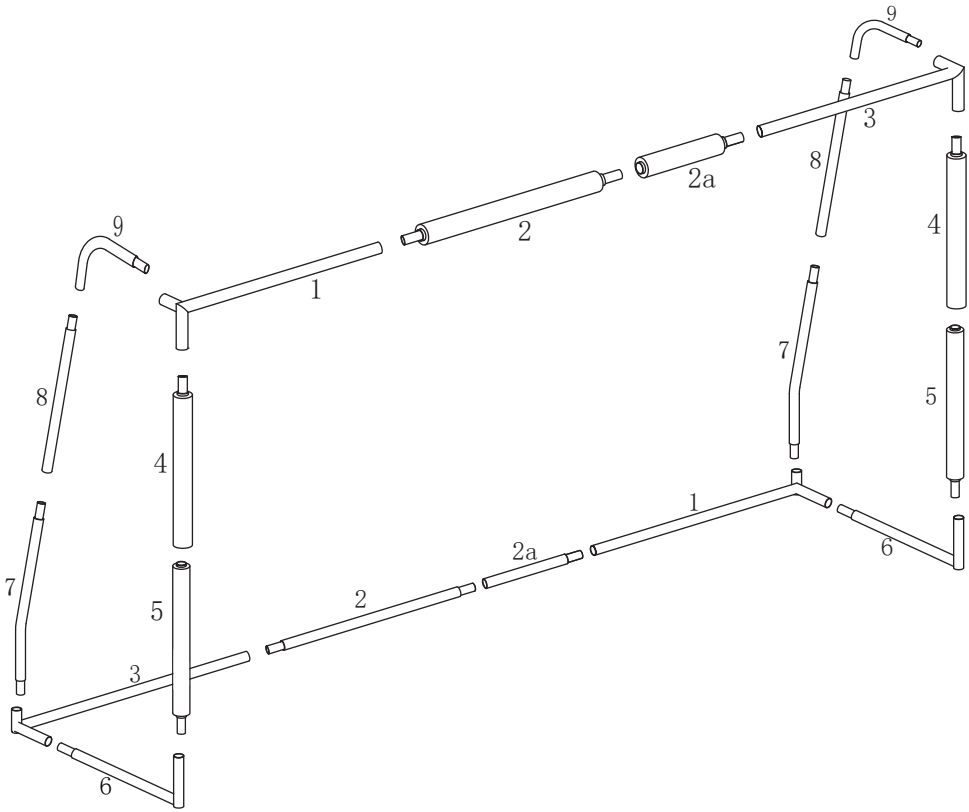

ASSEMBLY INSTRUCTIONS

Step 1

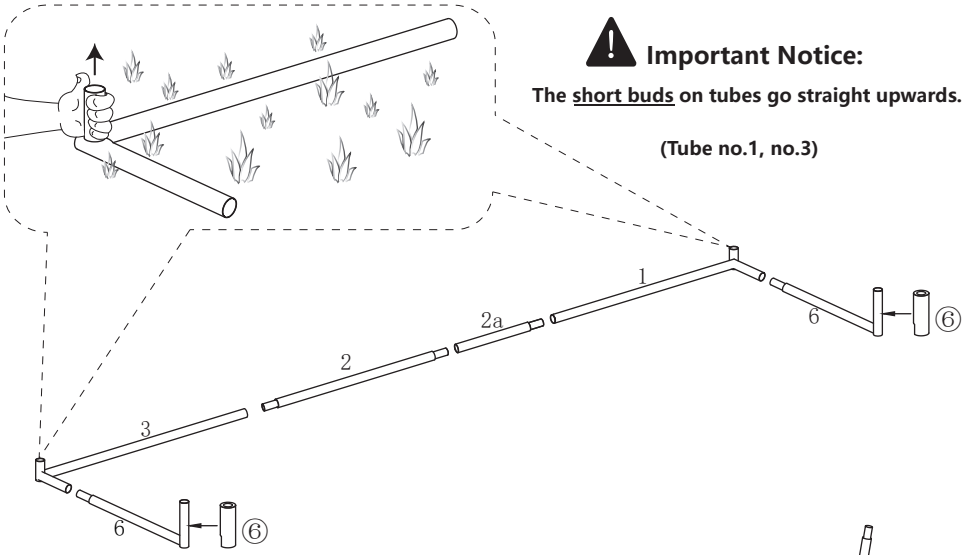

Important Notice:

The short buds on tubes go straight upwards.

(Tube no.1, no.3)

Step 2

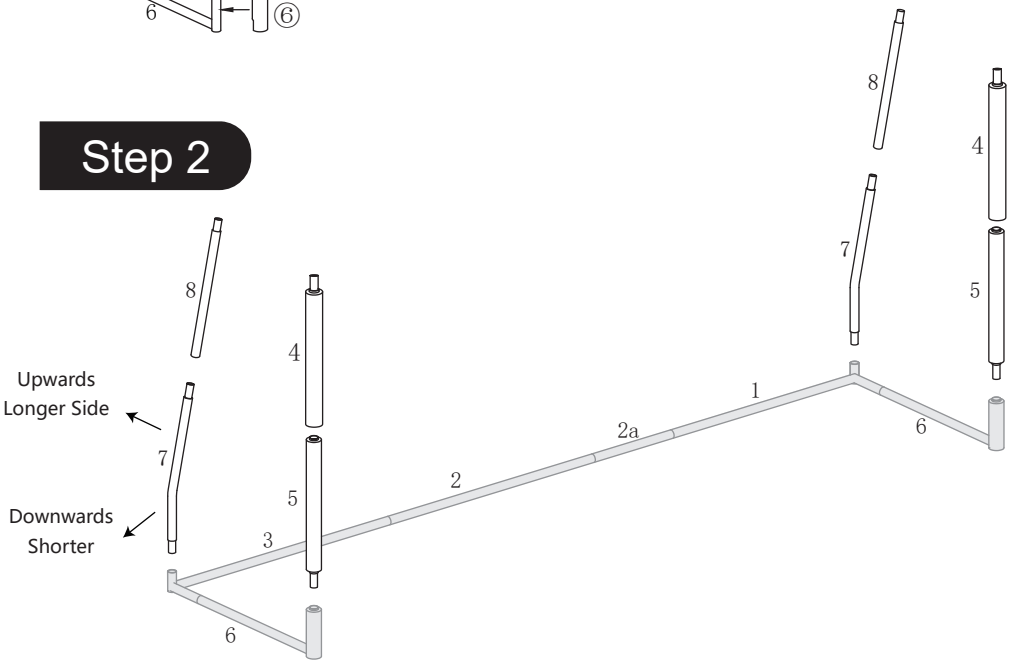

12FT X 6.5FT

Step 3

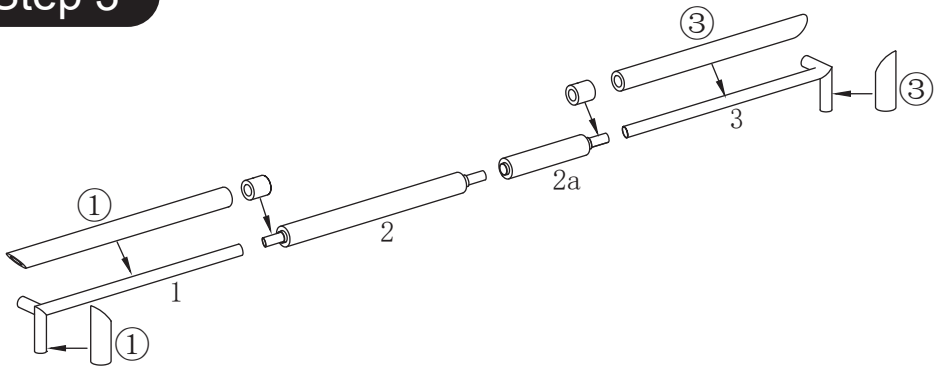

Step 4

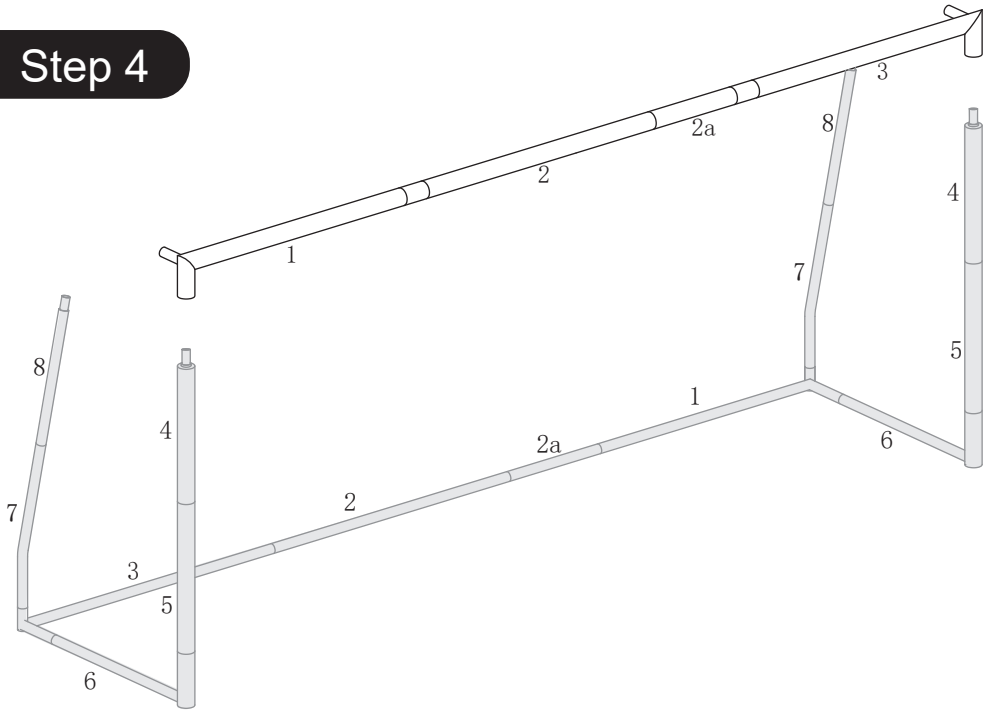

ASSEMBLY INSTRUCTIONS

Step 5

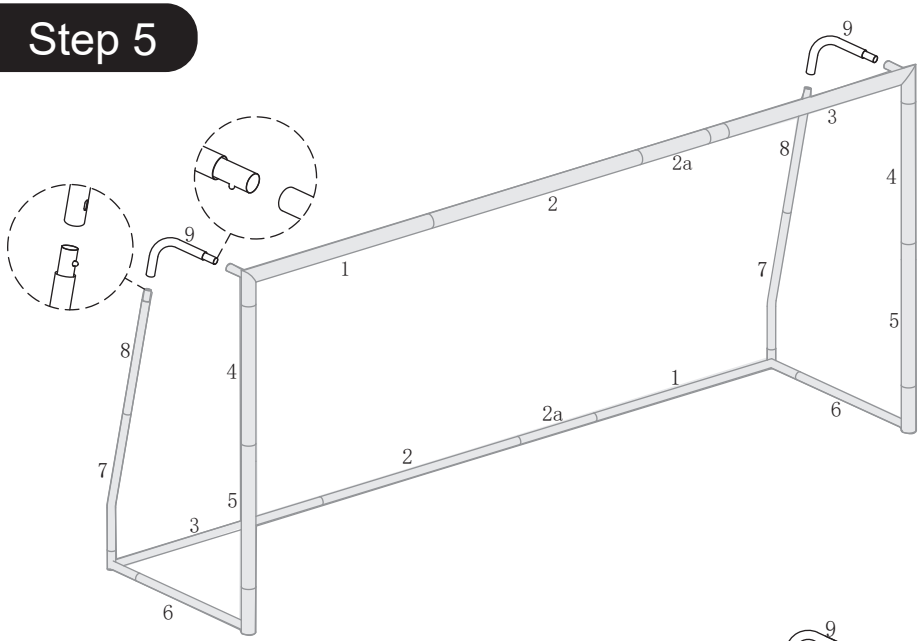

Step 6

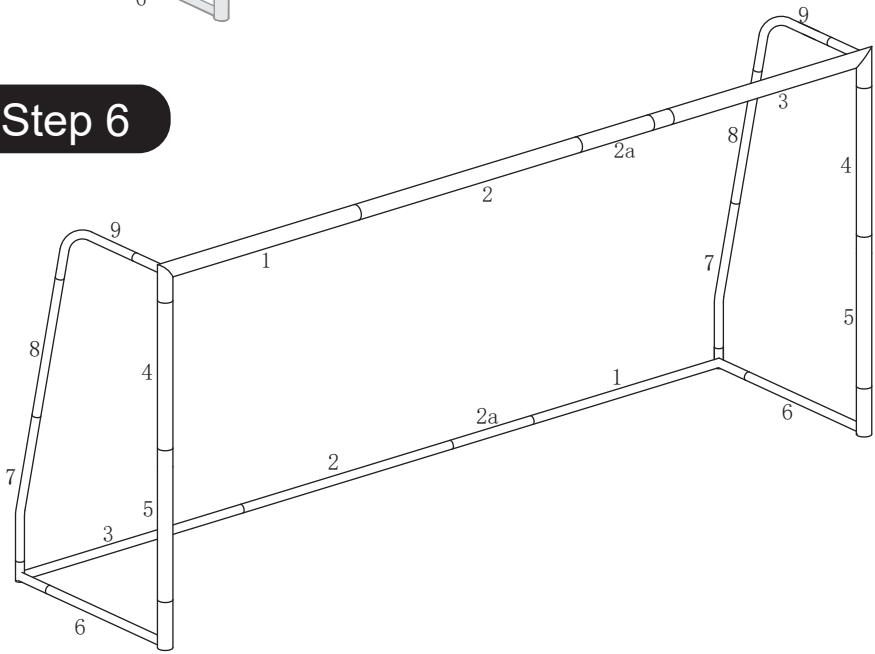

ASSEMBLY INSTRUCTIONS

3 Goal net assembly

Spread goal net on floor and locate the HOT JUMP letters at correct direction. Attach goal net onto goal frame by sleeves as following. On poles no.1, 2, 3 and 4, lock up the sleeves by zip, on poles no.5 and 6, connect the sleeves by Velcro straps. Adjust the sleeves for a tidy and firm connection.

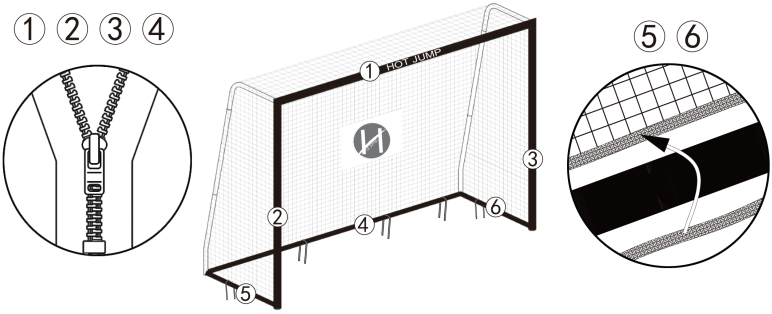

4 Fix the goal on the ground

Fix the assembled goal to the ground with pegs. Ensure that the ground is suitable for ground pegs. Ensure that the pegs are fully driven into the ground and secured in place. Avoid protruding fasteners - risk of tripping. On excessively hard surfaces, appropriate measures must be taken to prevent overturning and avoid the risk of injury (such as using a flat plate or sandbag). Never play with an unsafe goal, or leave it unsecured.

Safety Notice

1.Goals can only be set on flat ground.
2.Please maintain a minimum distance of at least 10 feet from any surrounding obstacles.
3.Ensure that the goal won't overturn at any time.
4.Avoid unnecessary exposure of the product to adverse weather conditions.
5.Store it in a cool and dry storage area.
6.Check the product for any rust and immediately remove it. Pushing metal components together may cause scratches and rust on the protective layer.
7.Only use dry or damp cloth to clean the product; Do not use special cleaning agents!
8.Do not make any structural changes.

Manufacturer

Jiangsu Baoxiang Sports Equipment Co., Ltd
No.2 Renmin Road, Yinji Town, Jinhu County, Huaian City, 211644 Jiangsu P.R. China