80091 Product Installation Instructions

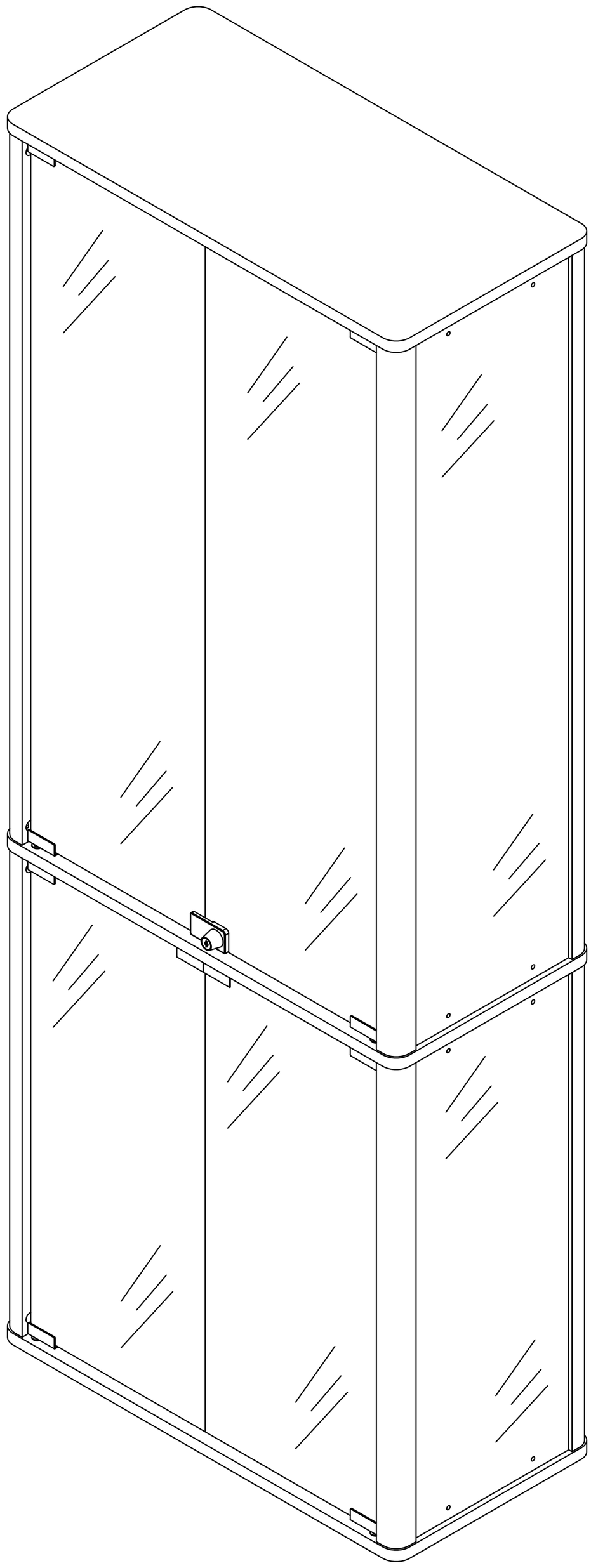

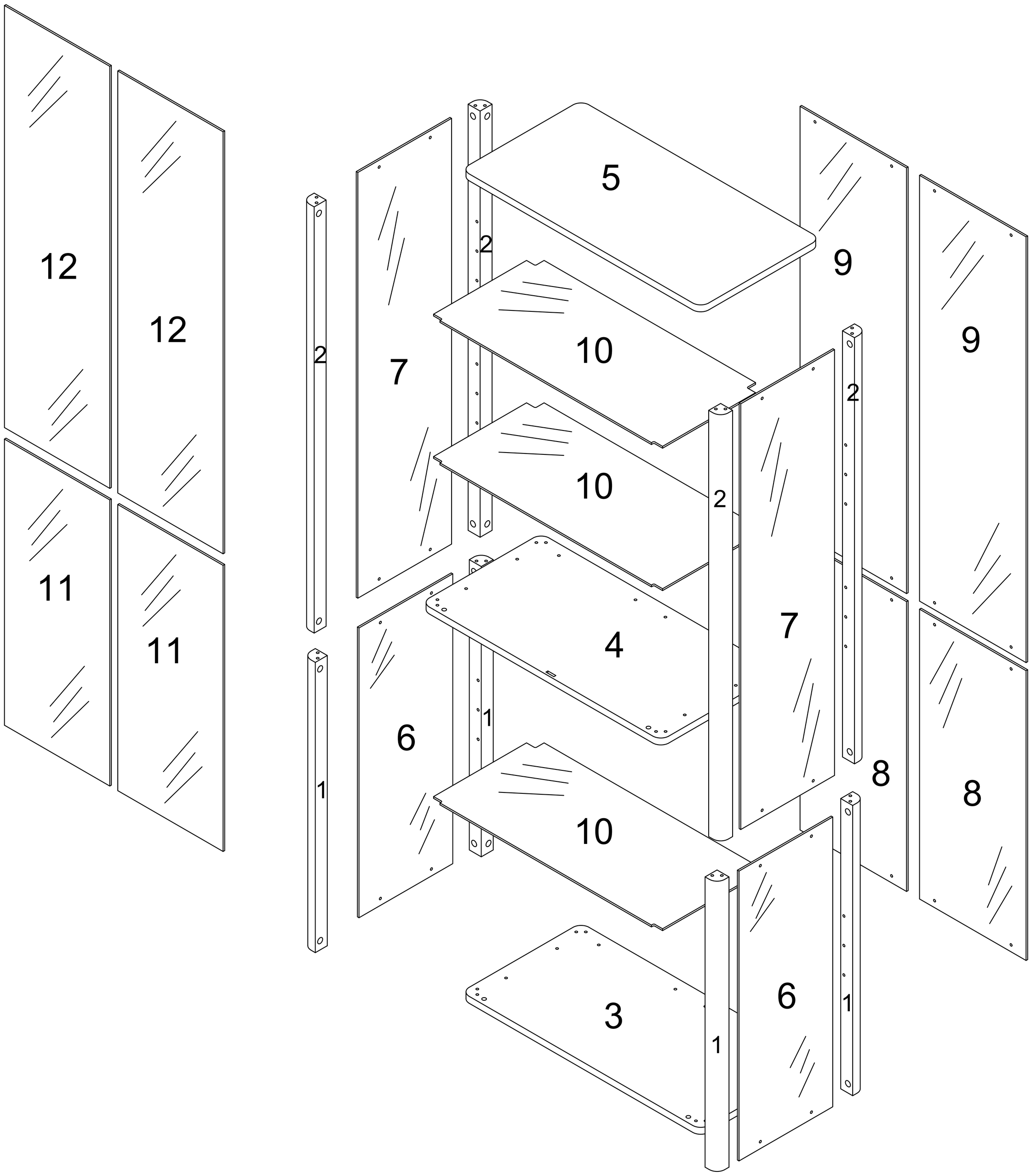
12
12
11
11
2
2
1
1
7
6
2
1
5
10
10
10
4
3
9
9
2
2
7
8
8
6
1
1

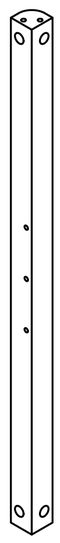

1x4

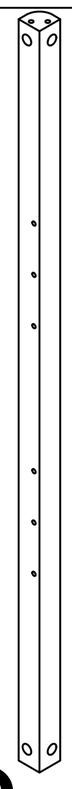

2x4

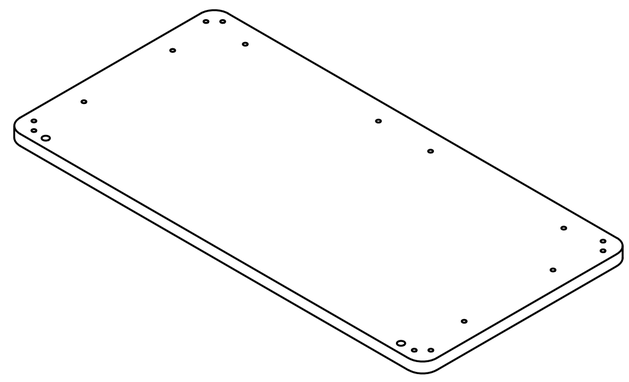

3x1

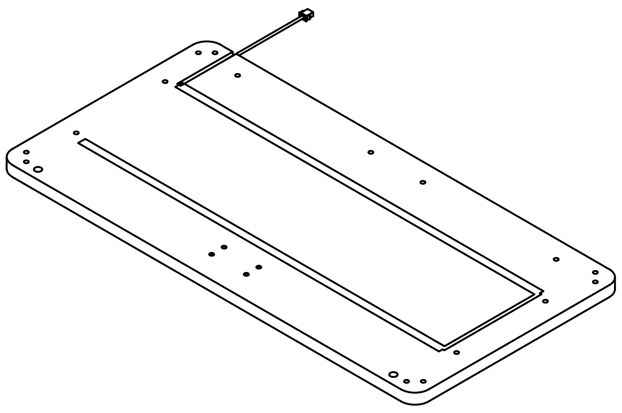

4x1

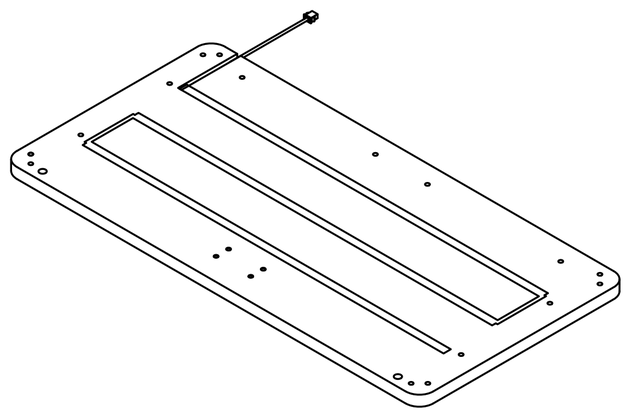

5x1

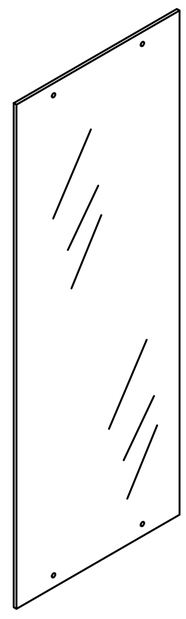

6x2

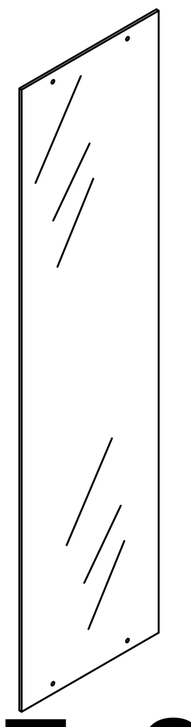

7x2

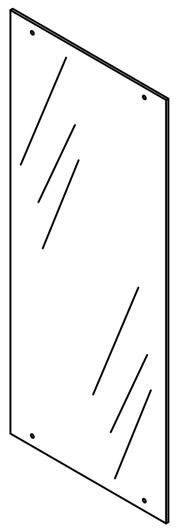

8x2

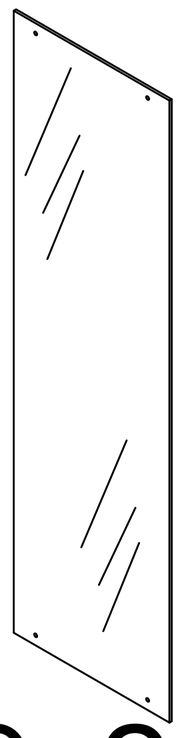

9x2

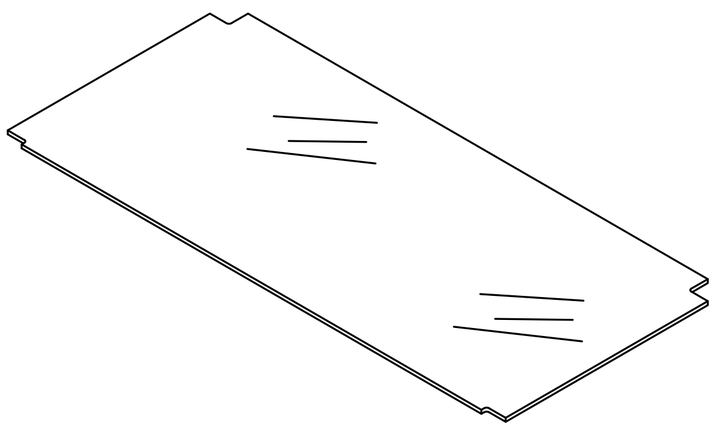

10x3

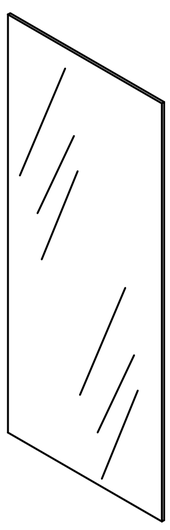

11x2

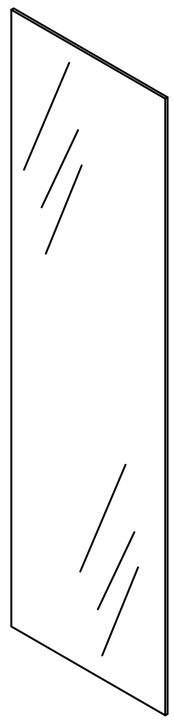

12x2

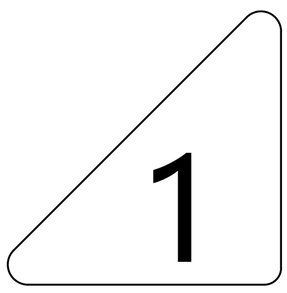

A		Non-slip pads (50x10mm)	4pcs +2pcs
B	x1 x1 x2	Corner Bracket,,Screw (4x8mm)	32pcs +4pcs
C		Two In One Nut (10x12mm)	32pcs +4pcs
D		Laminate support nail	12pcs +4pcs
E		Rebound device & Screw (3x16mm)	8pcs +2pcs / 2pcs
		Iron sheet	4pcs
		Hinge	8pcs / 4pcs / 4pcs
F		LED Strip Controlle	1pcs
G		AC/DC Adapter (12V⎓3.0A)	1pcs
H	x2 (3.5x14mm) x2 x2	Anti Fall Hardware x4	x2 (4x45mm)
I		Two In One Screw (6x28mm)	32pcs +4pcs
J		Clamp	3pcs +1pcs
K		Dual-port cable	1pcs
L		Double door glass lock Key	1pcs / 2pcs / 1pcs +1pcs

1pcs

Double-head screwdriver, use as required

2

Use parts A and B

Step1

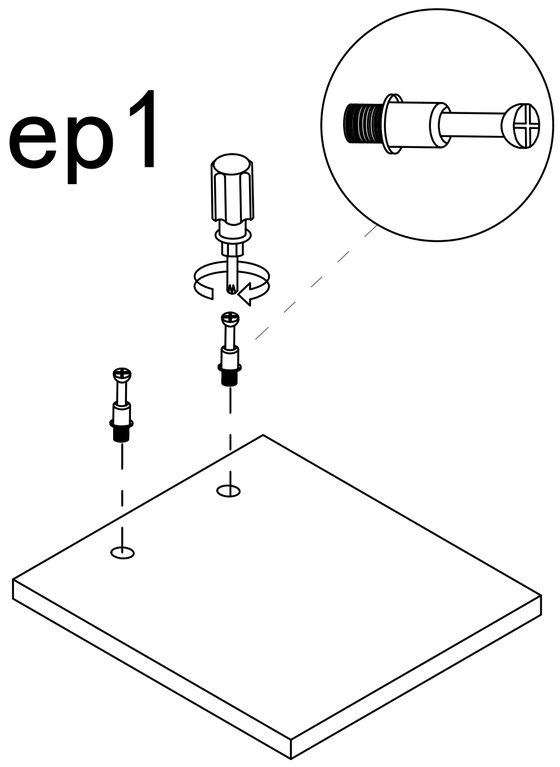

Step2

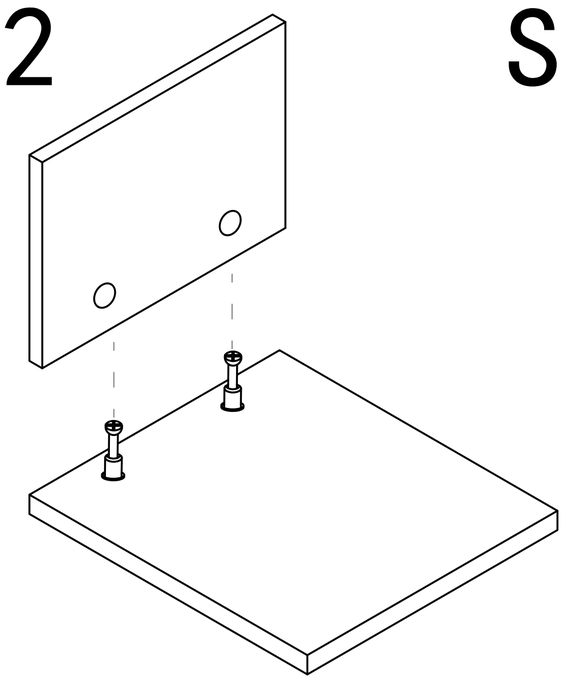

Step3

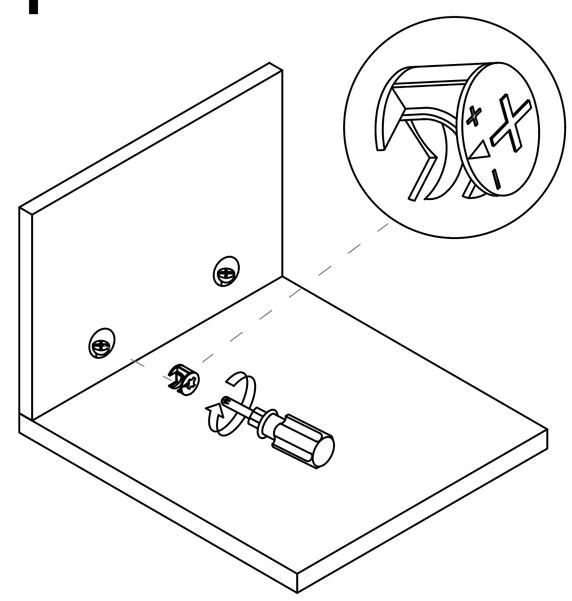

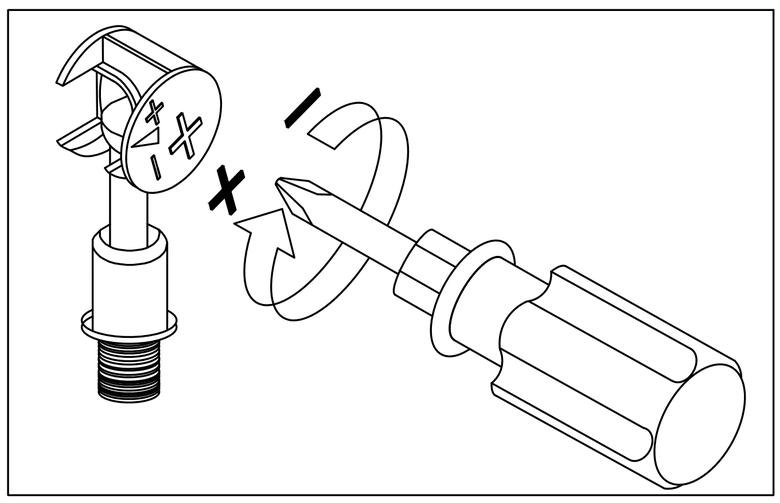

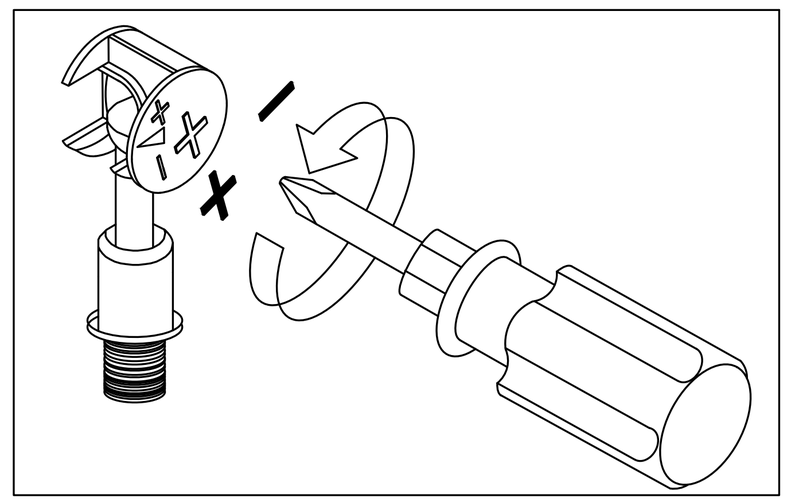

Use a screwdriver to lock in the direction of the "+" sign

Disassemble along the direction of "-" sign

Step 1

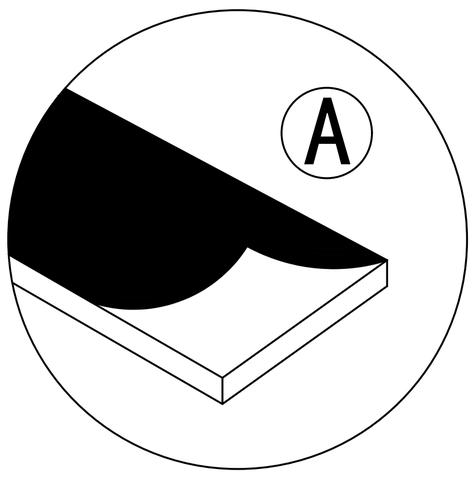

Remove the protective film before installation

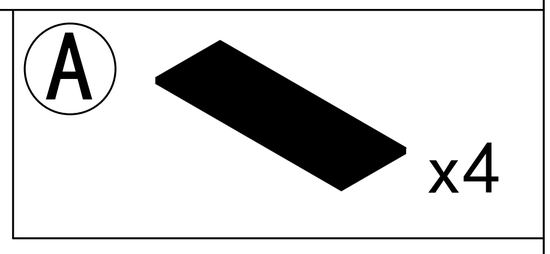

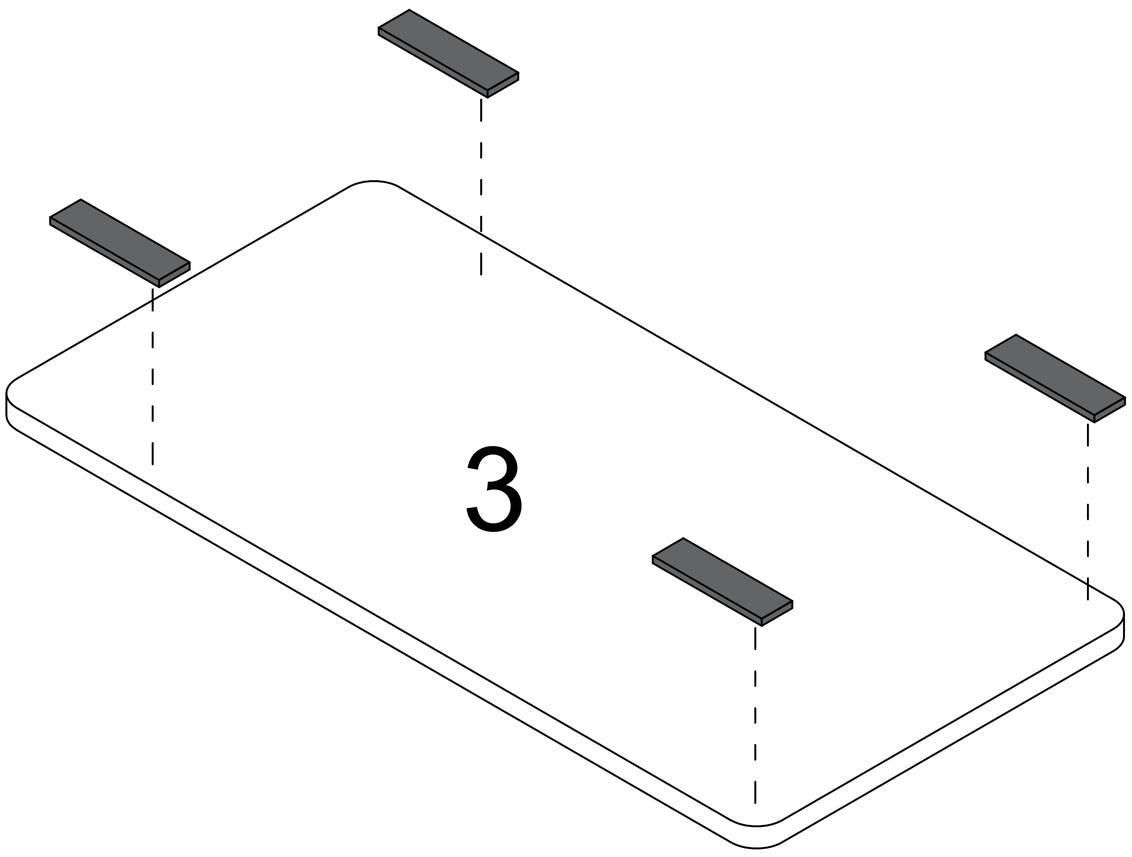

Step 2

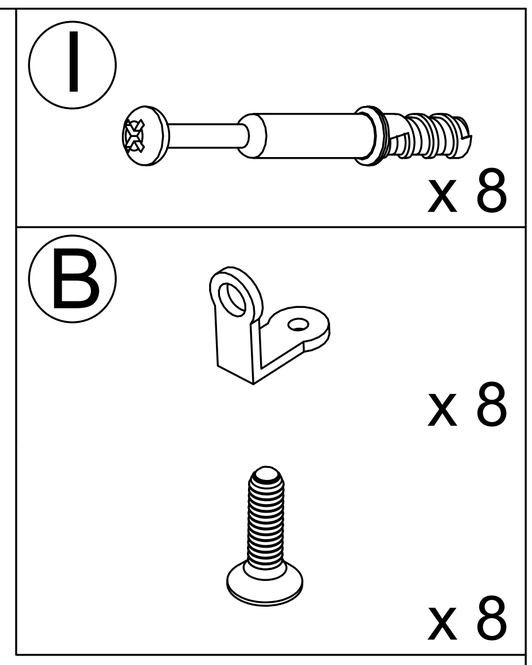

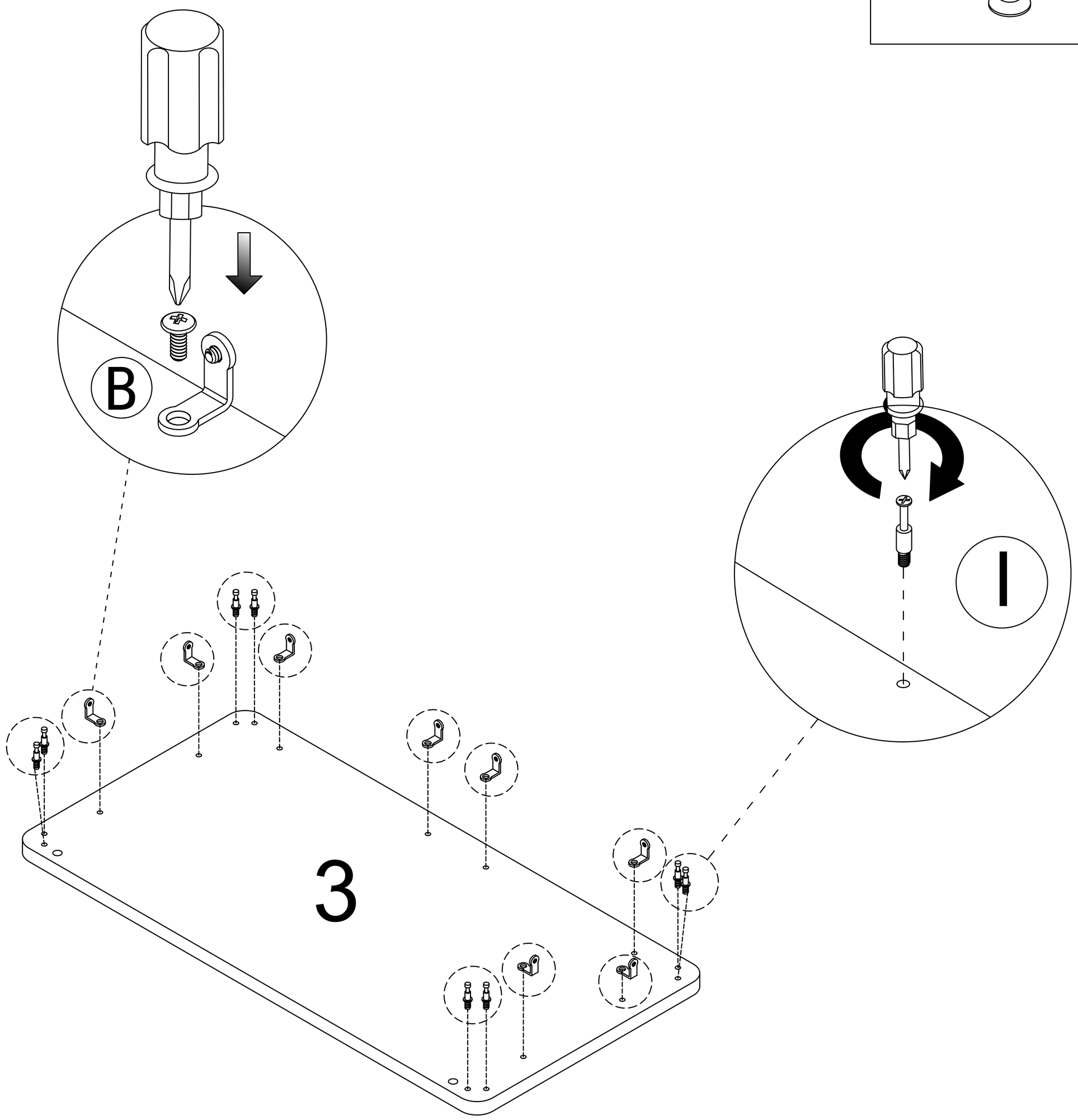

Install this hole

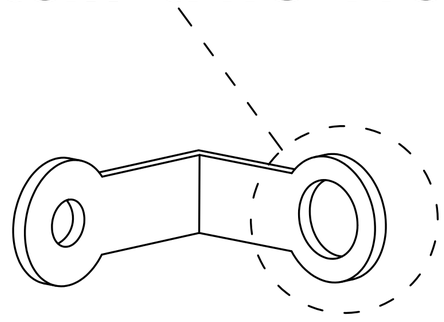

Step 3

C x 8

Please note: Installation must be performed using the hole-to-hole alignment method.

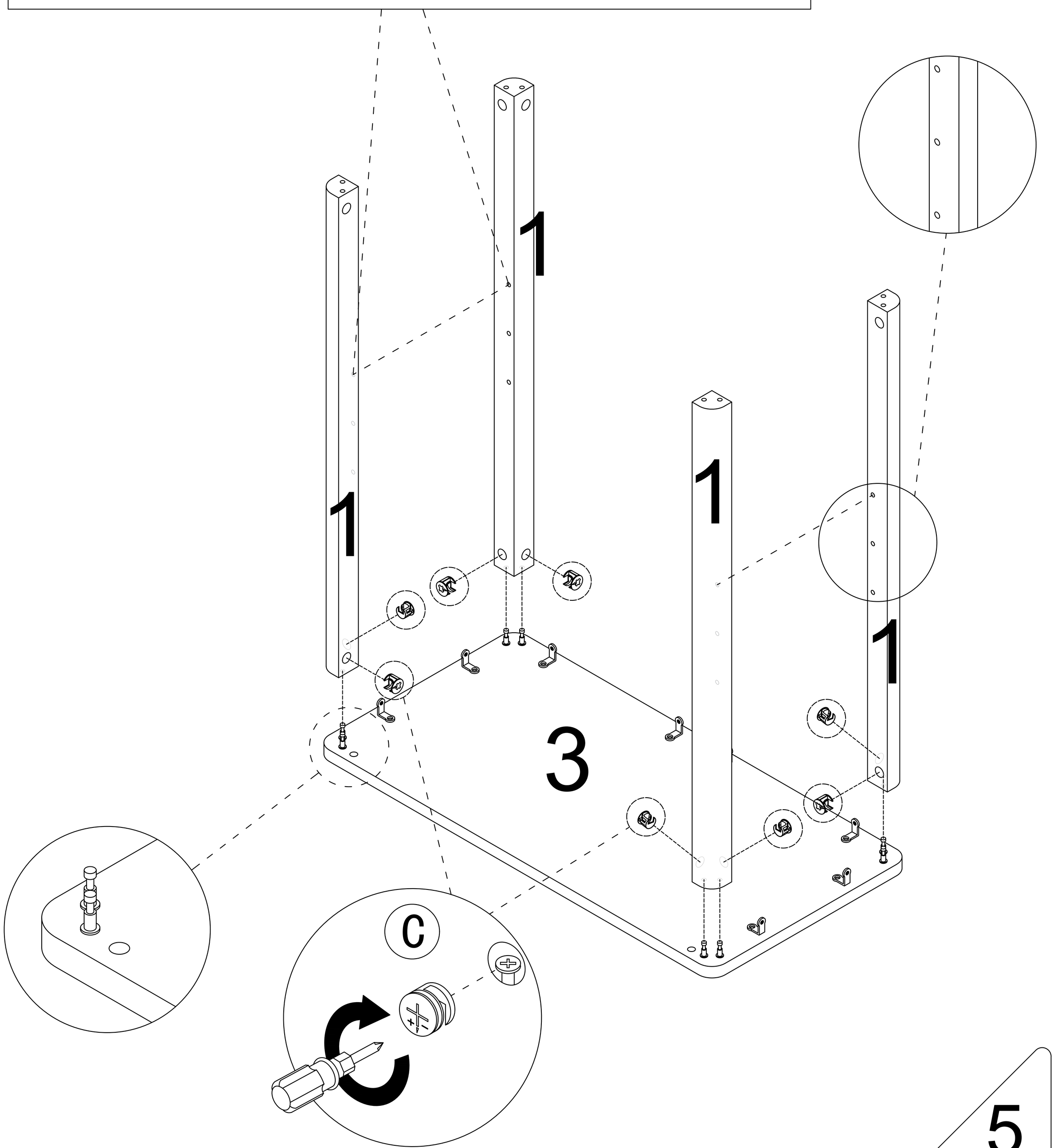

Step 4

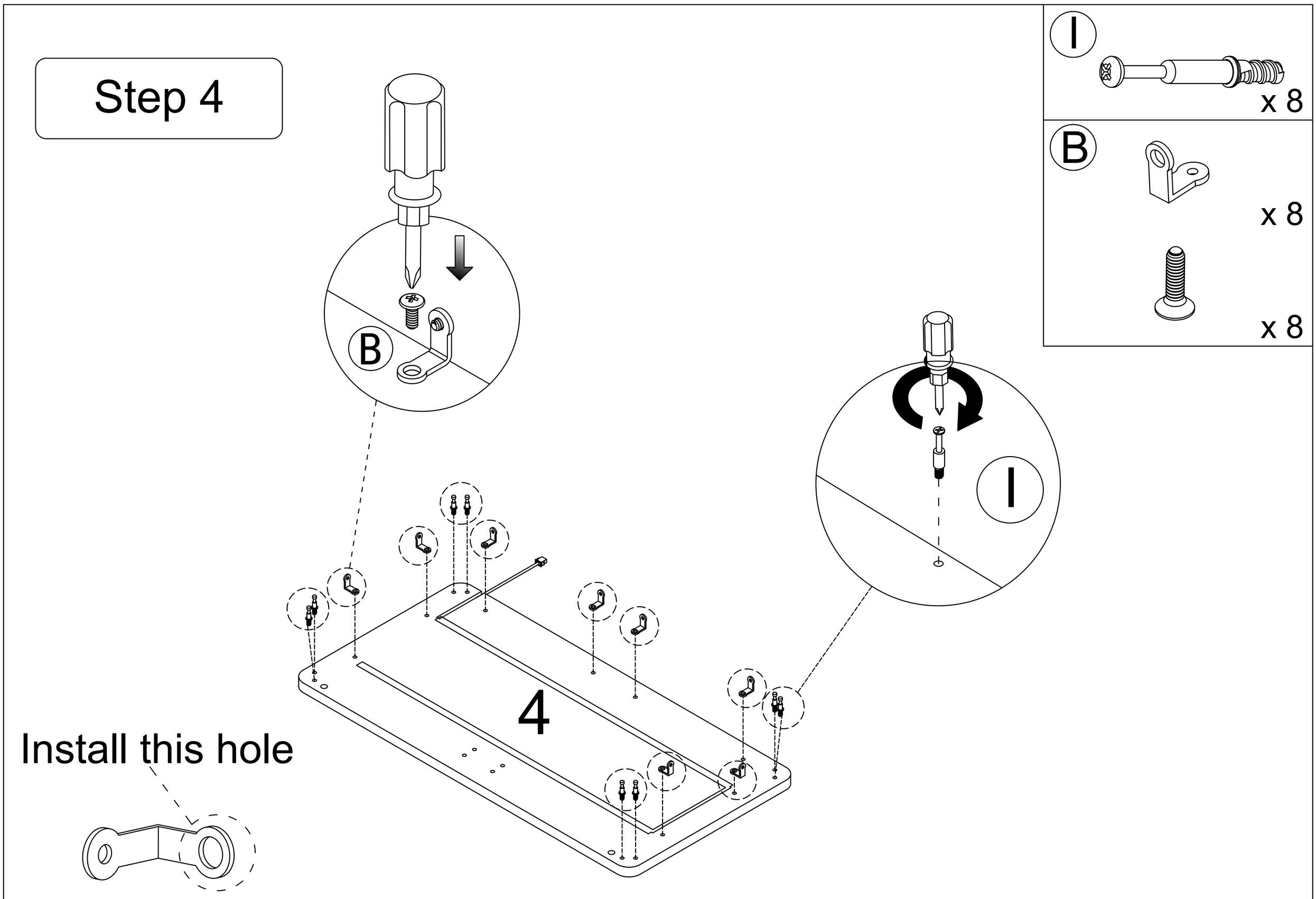

Step 5

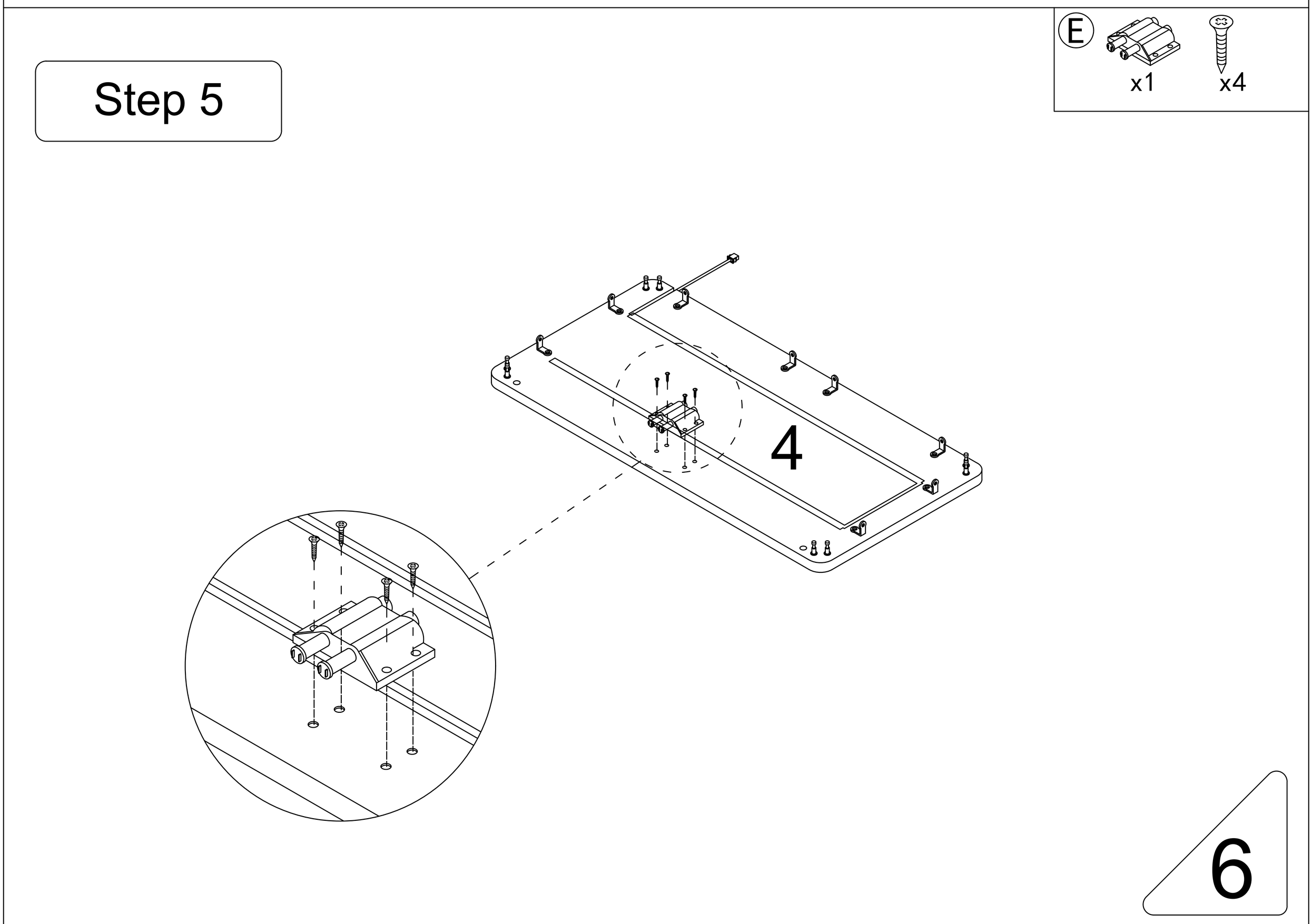

Step 6

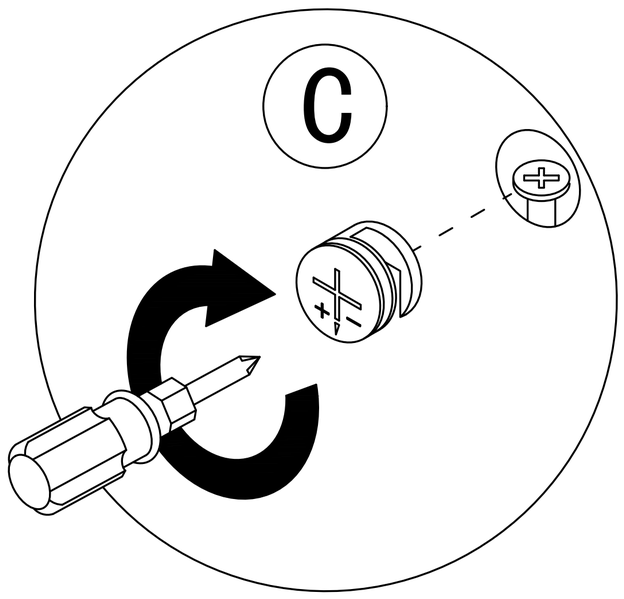

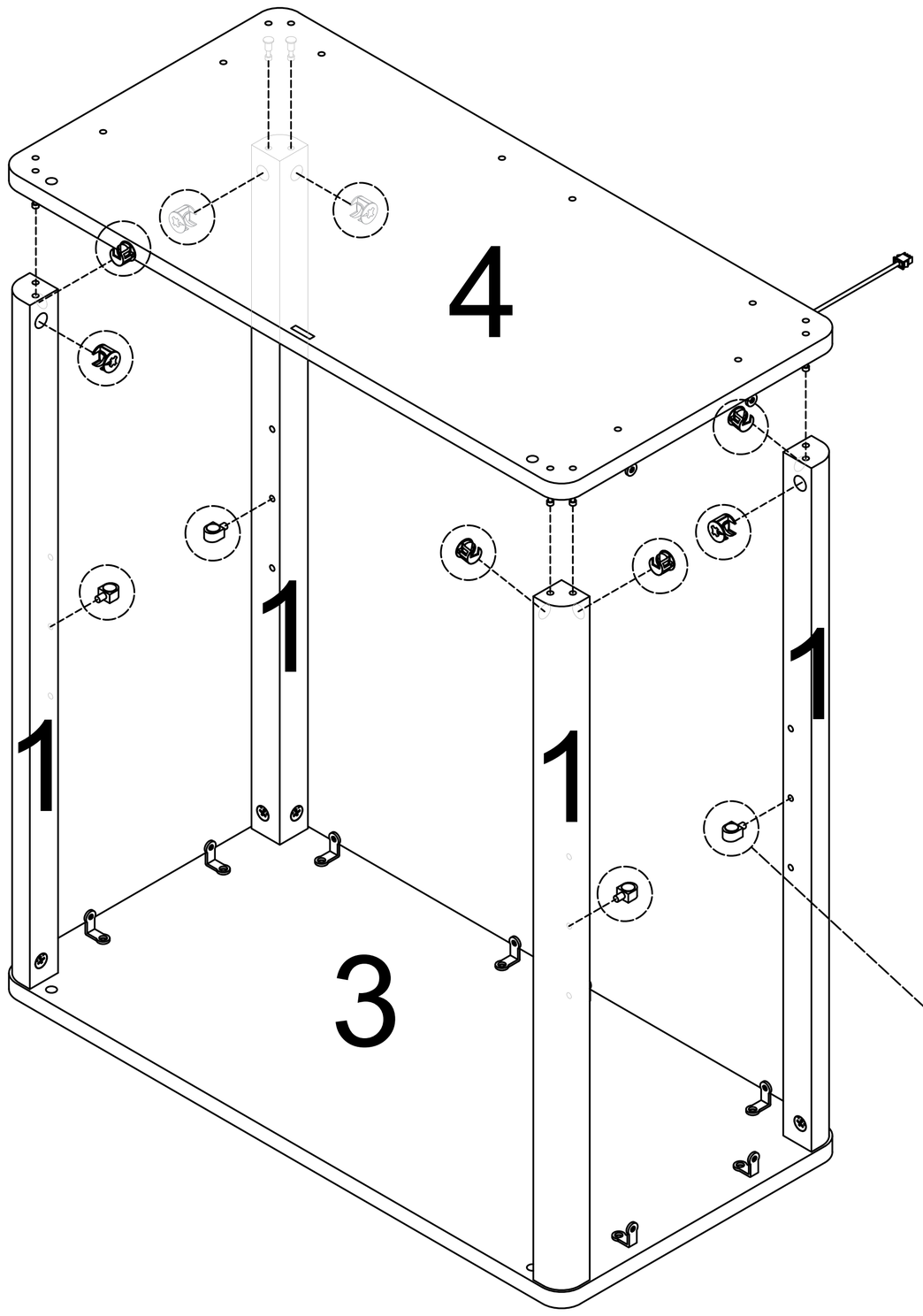

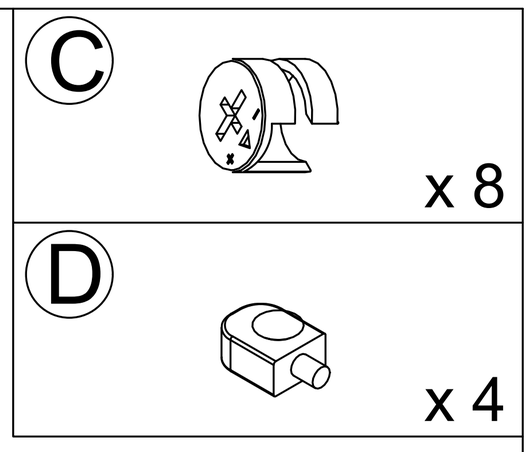

Adjustable up and down as needed

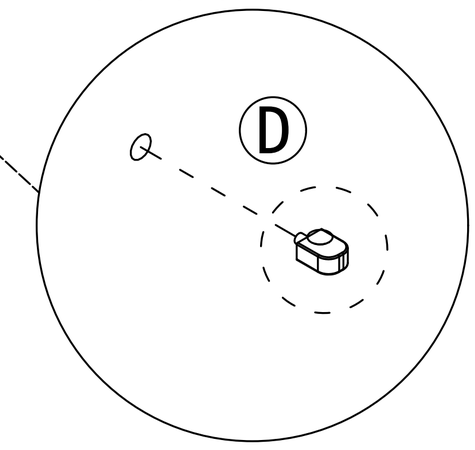

Step 7

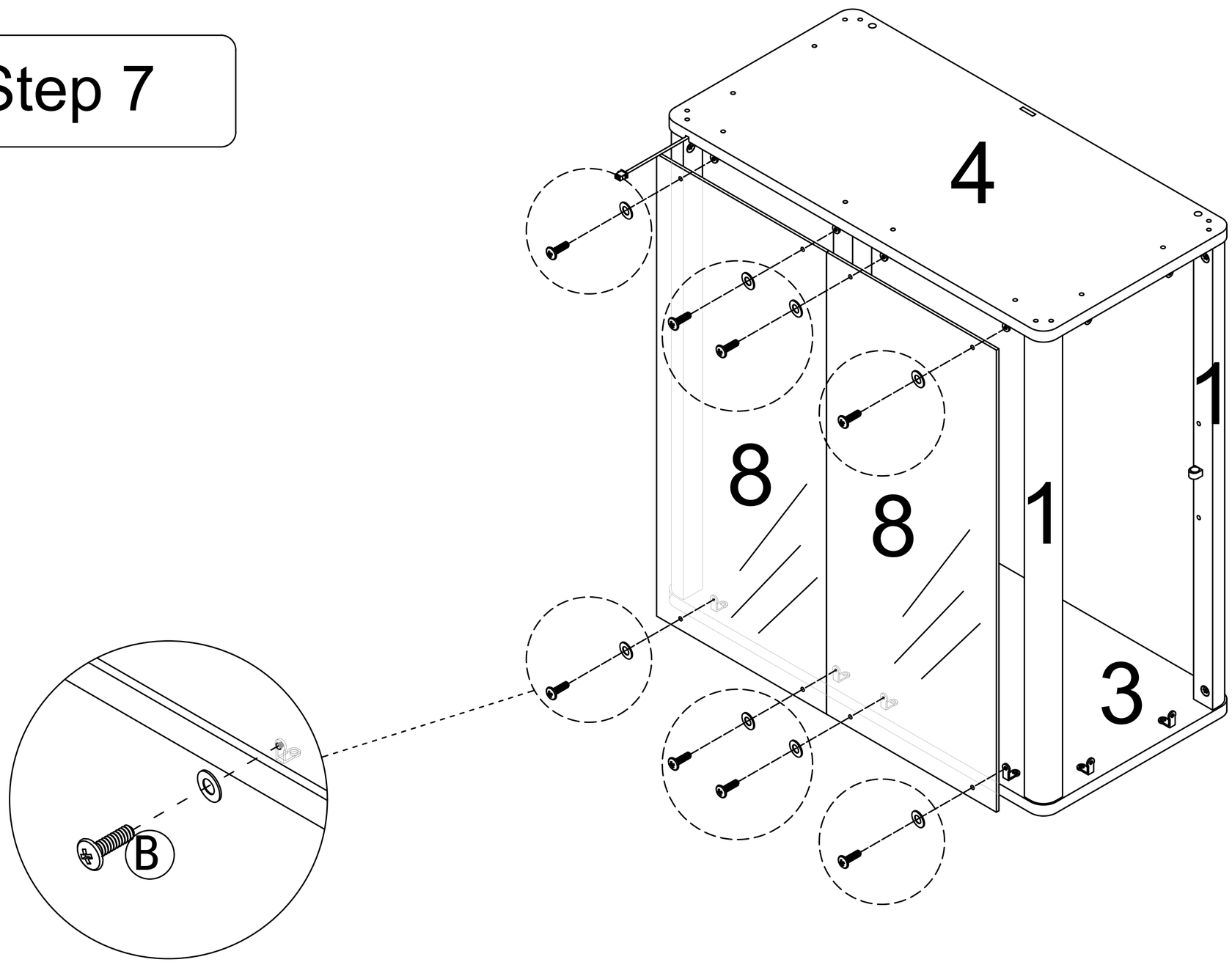

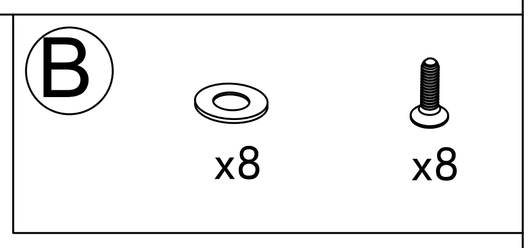

Please note: Do not use an electric drill when installing glass.

It is recommended to have two people assist with the installation.

Step 8

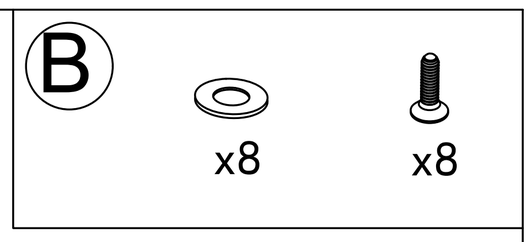

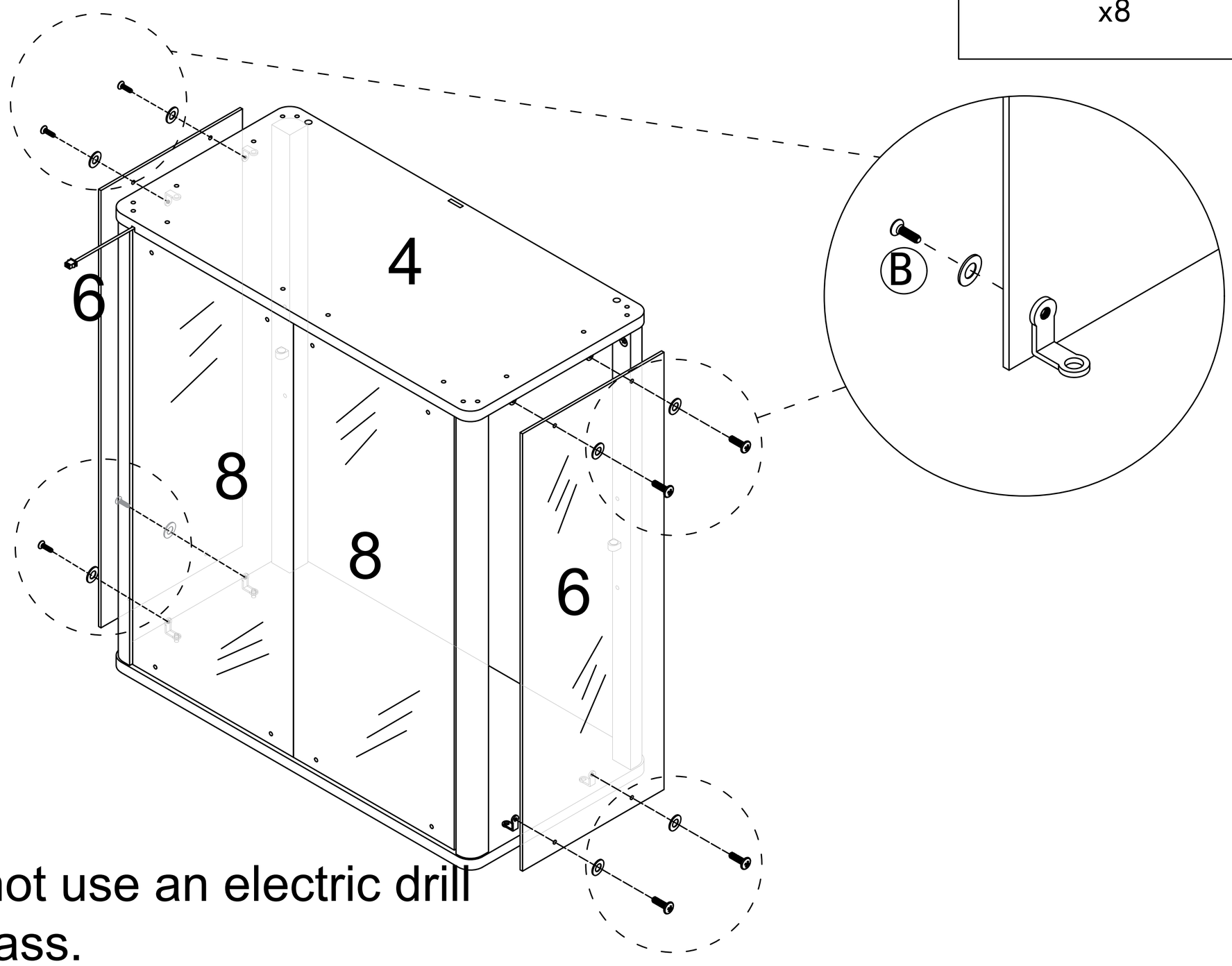

Please note: Do not use an electric drill when installing glass.

It is recommended to have two people assist with the installation.

Step 9

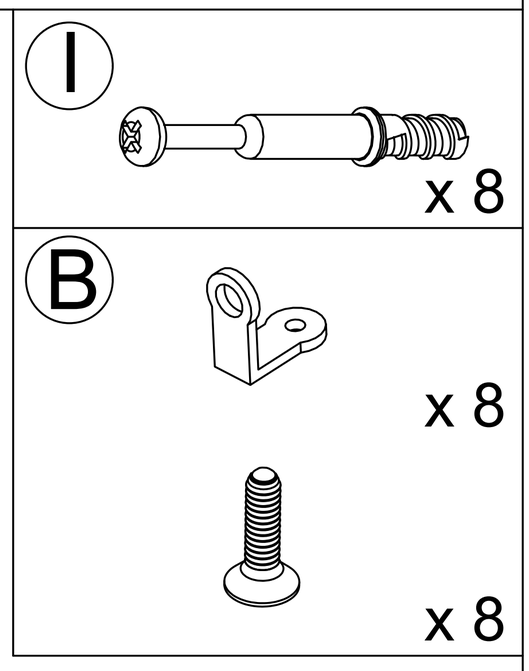

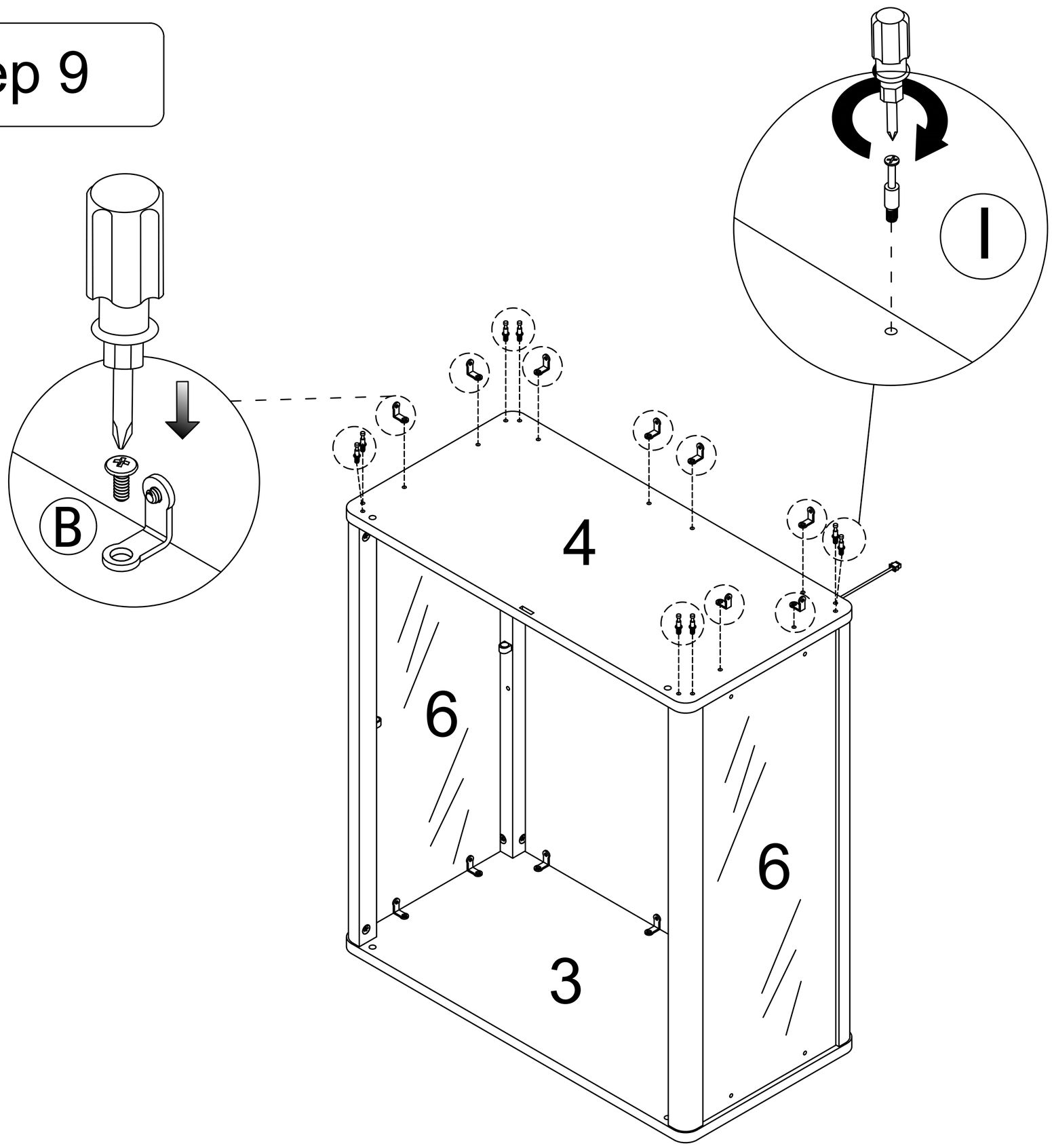

Step 10

C x 8

Please note: Installation must be performed using the hole-to-hole alignment method.

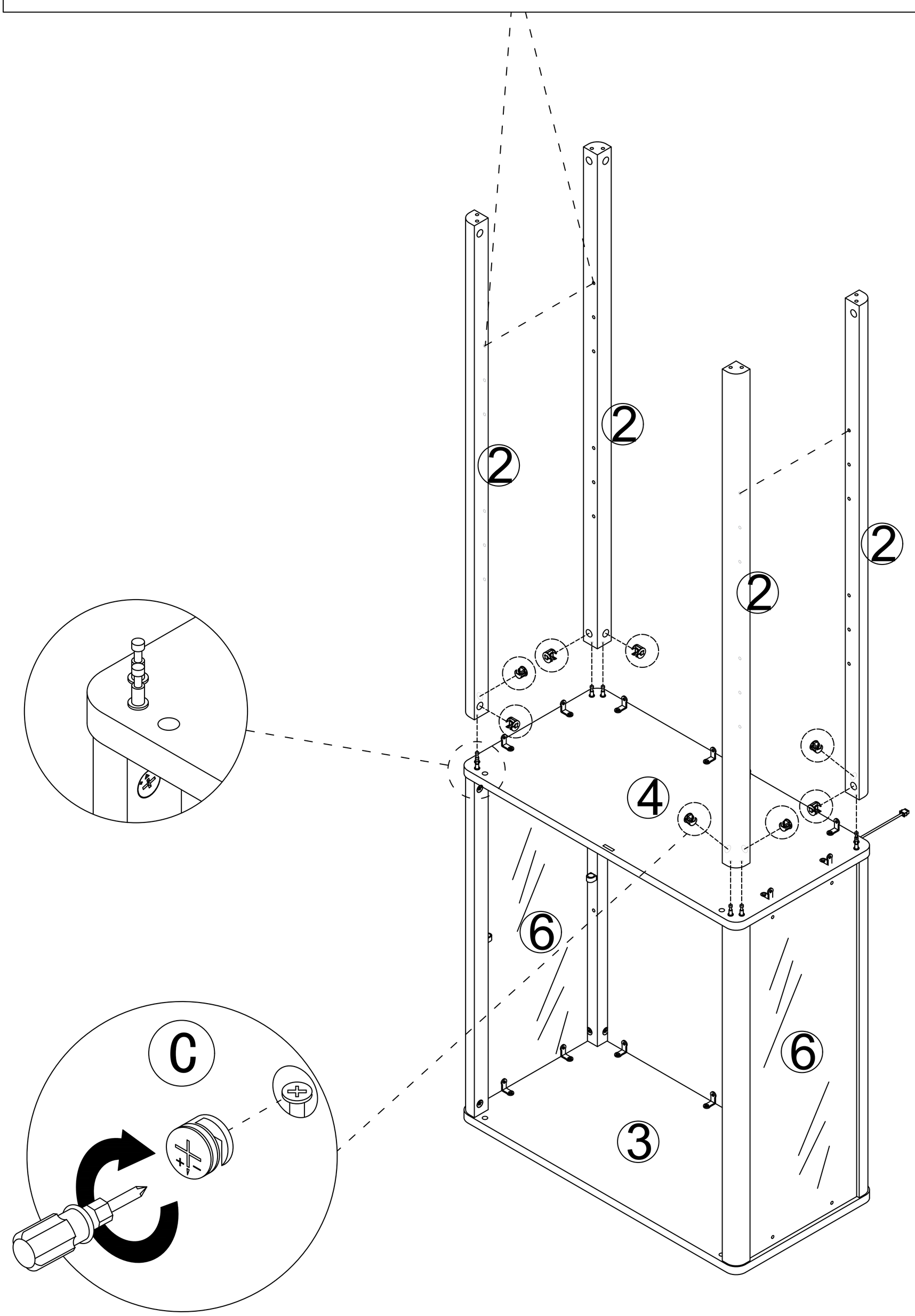

9

Step 11

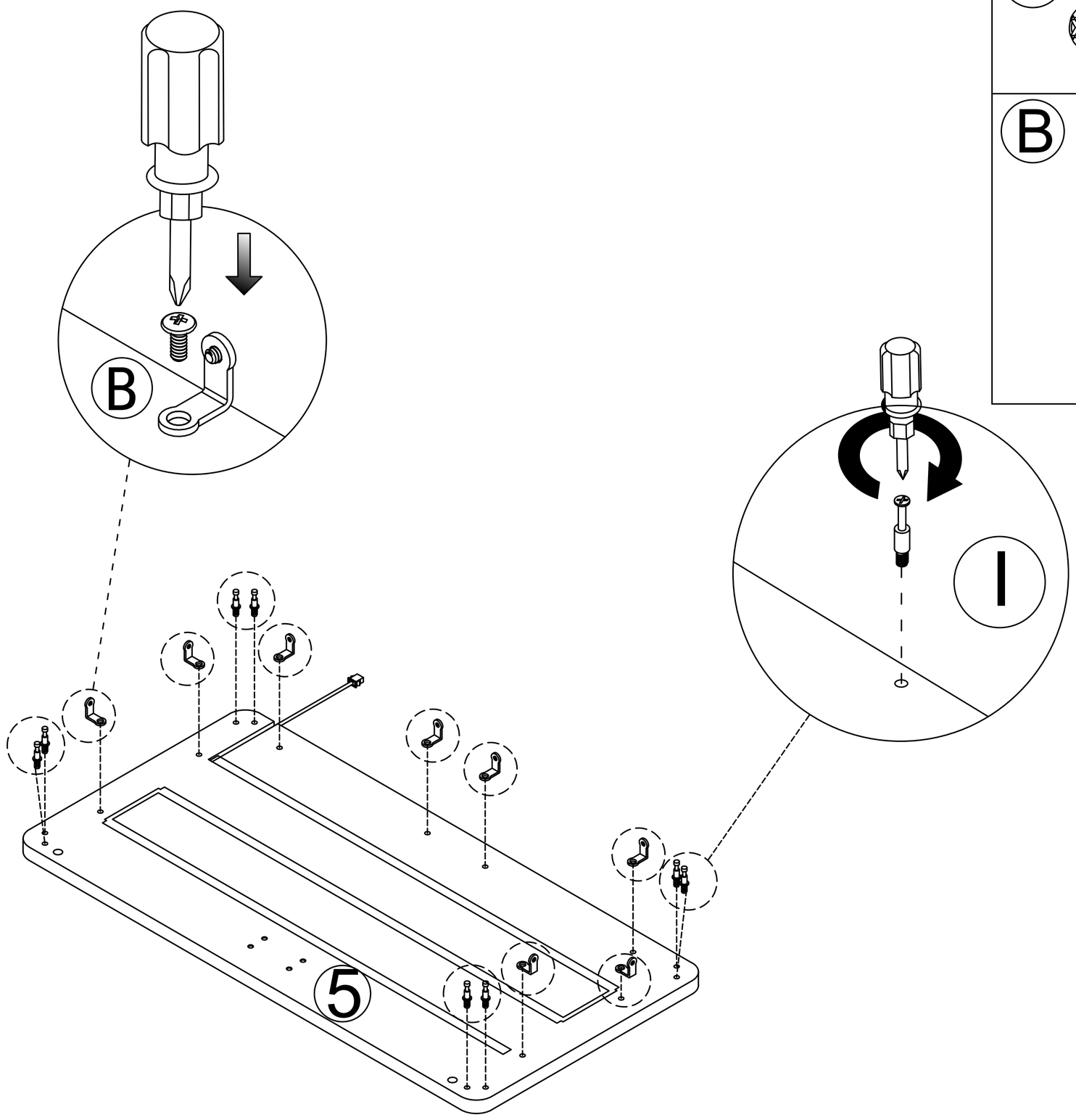

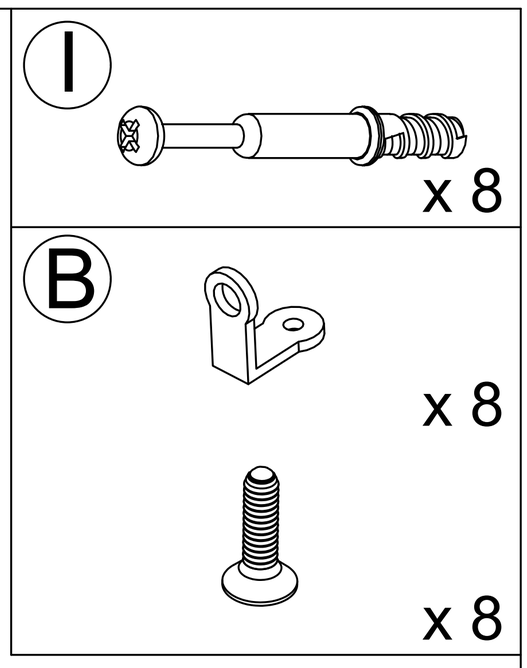

Step 12

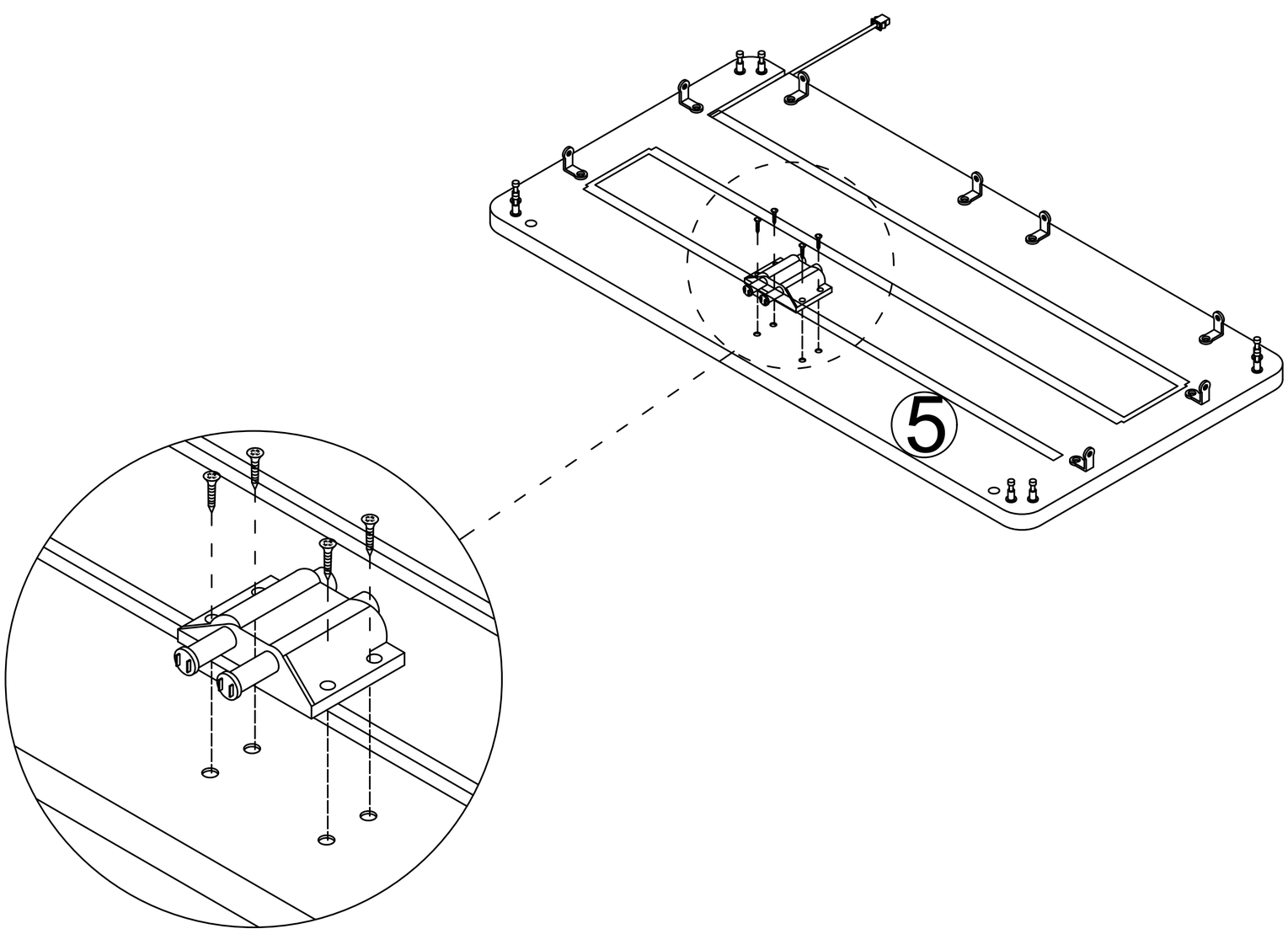

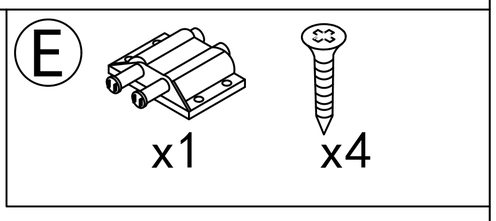

Step 13

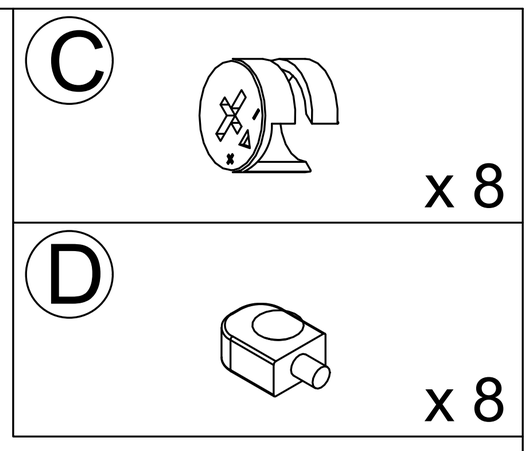

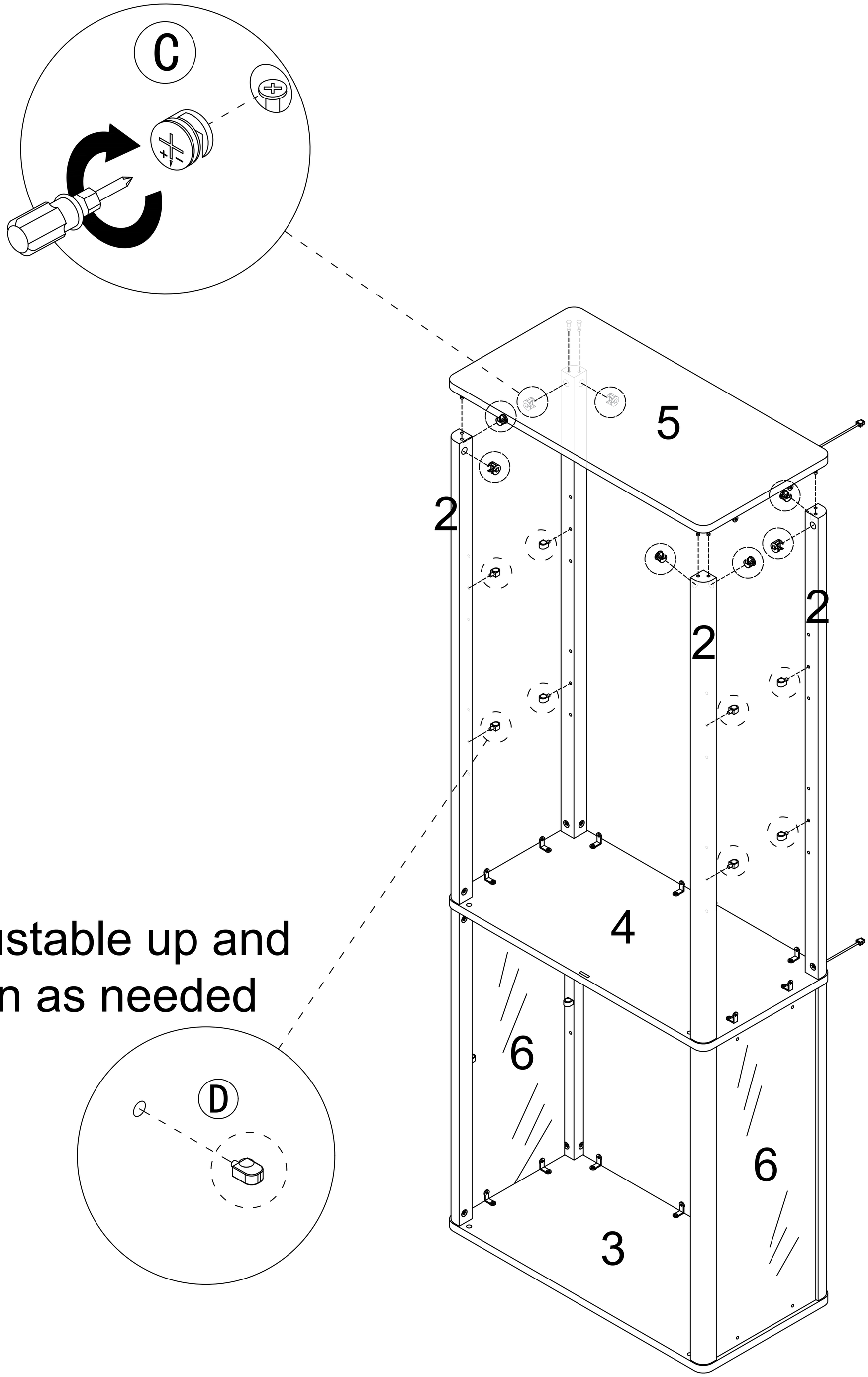

Adjustable up and down as needed

Step 14

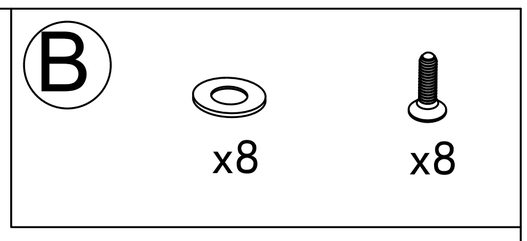

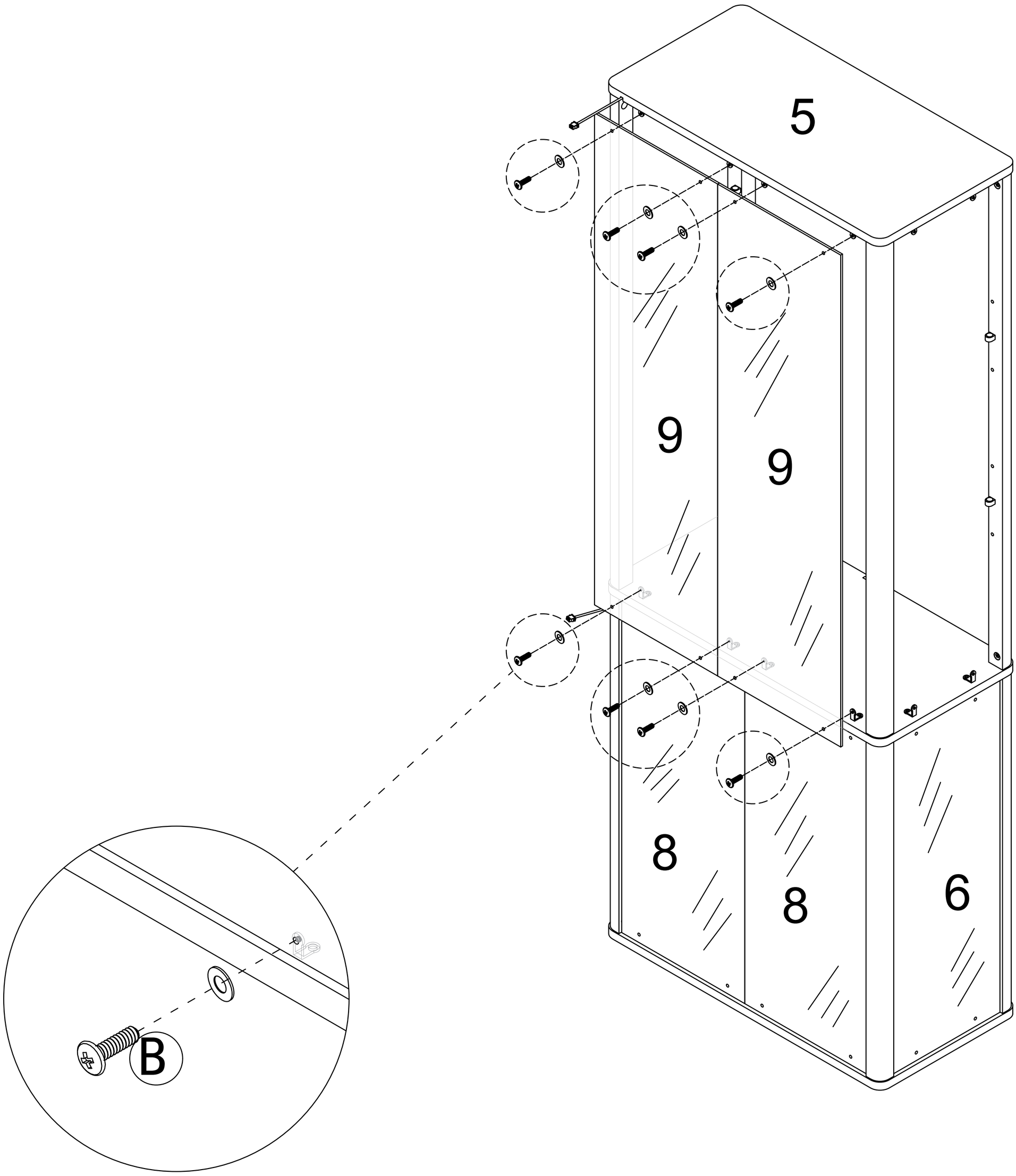

Please note: Do not use an electric drill when installing glass.

It is recommended to have two people assist with the installation.

Step 15

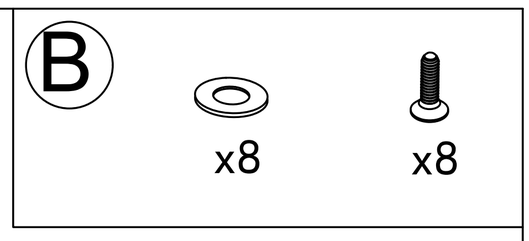

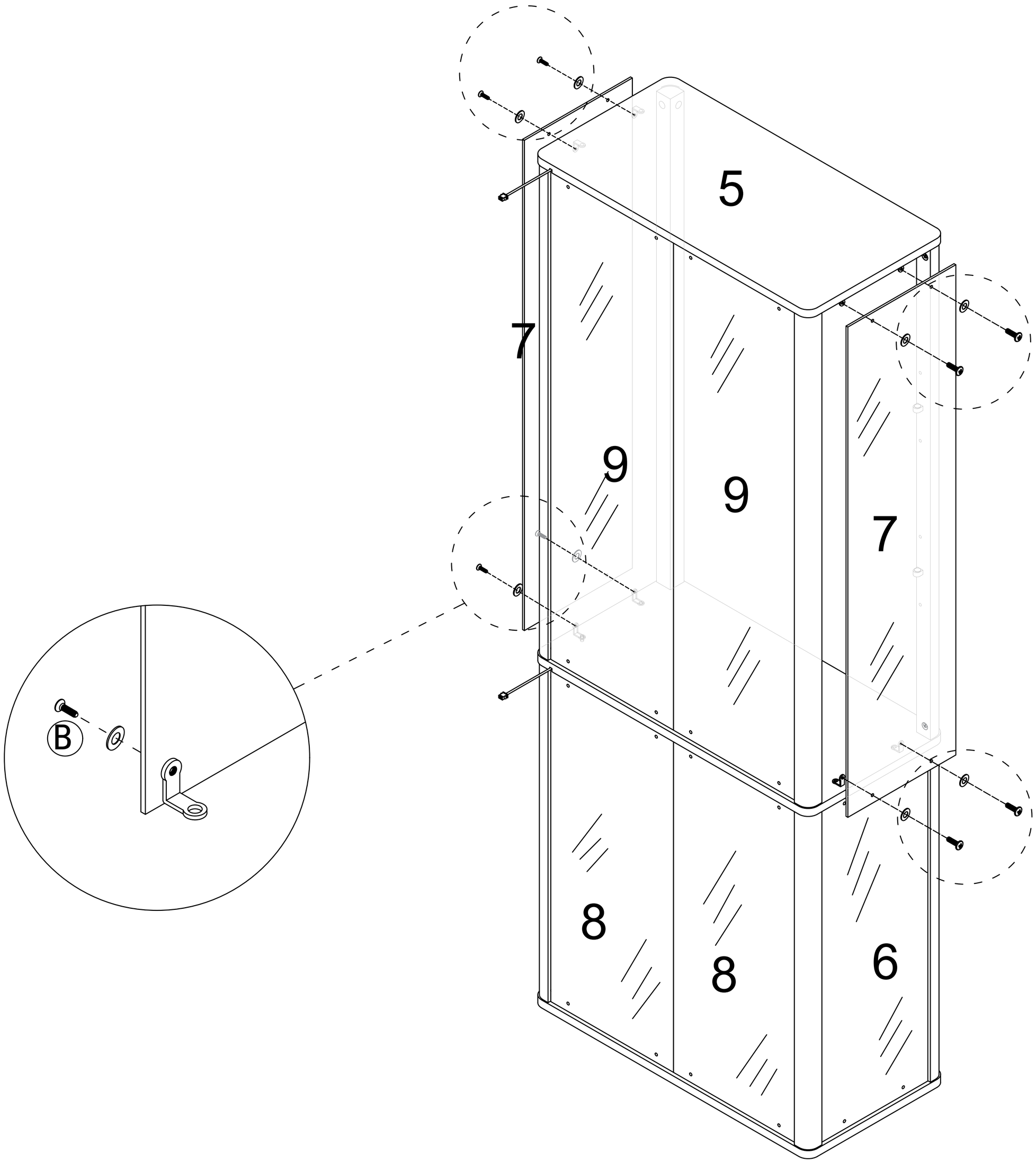

Please note: Do not use an electric drill when installing glass.

It is recommended to have two people assist with the installation.

Step 16

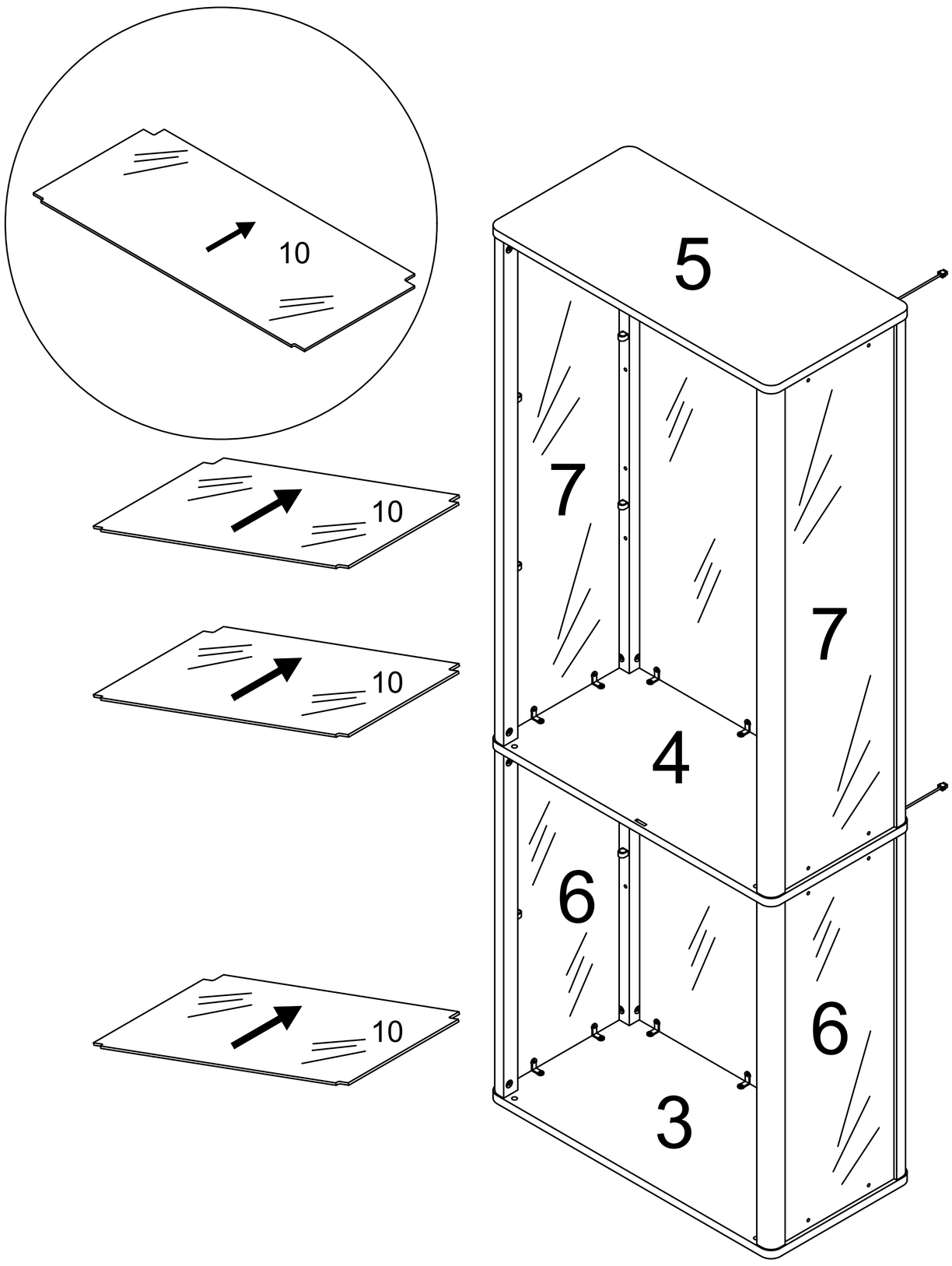

First, place the glass shelf at an angle inside the cabinet, then lay it flat on the shelf support.

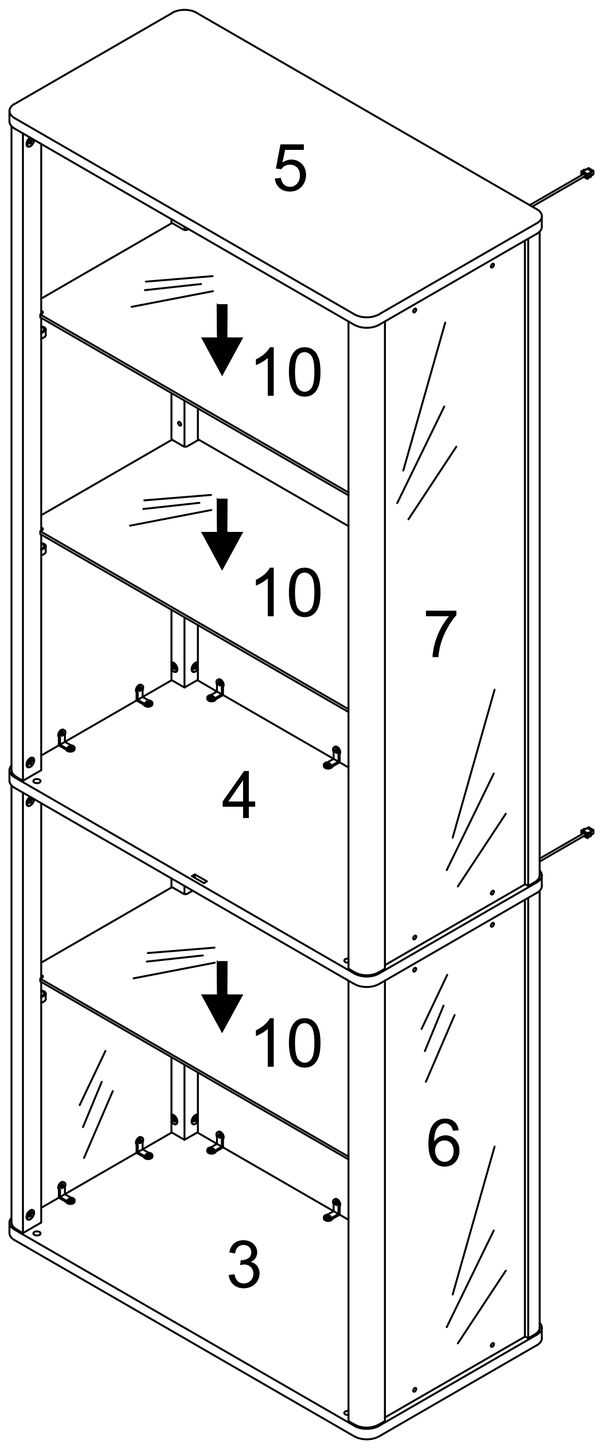

Step 17

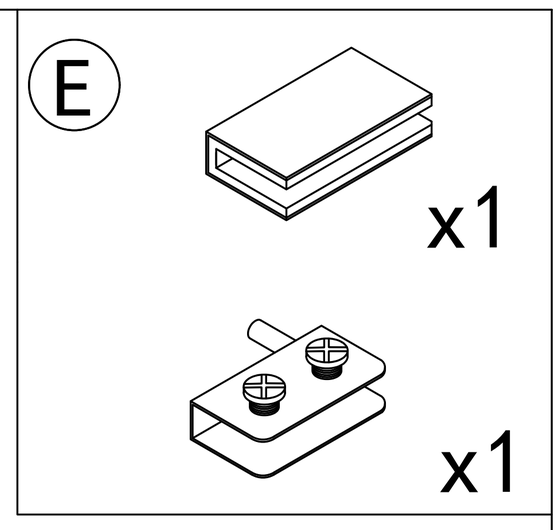

First, completely unscrew the screws on the parts

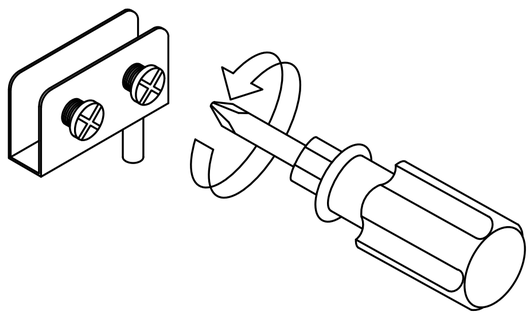

Place the white gasket first, then install the hinge, and finally tighten the screws.

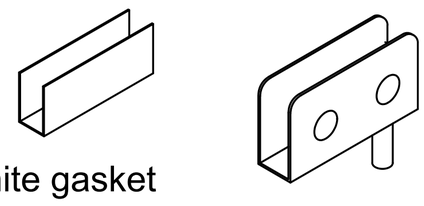

Pay attention to the direction of the door hinge, and rotate the screws to compress the white gasket

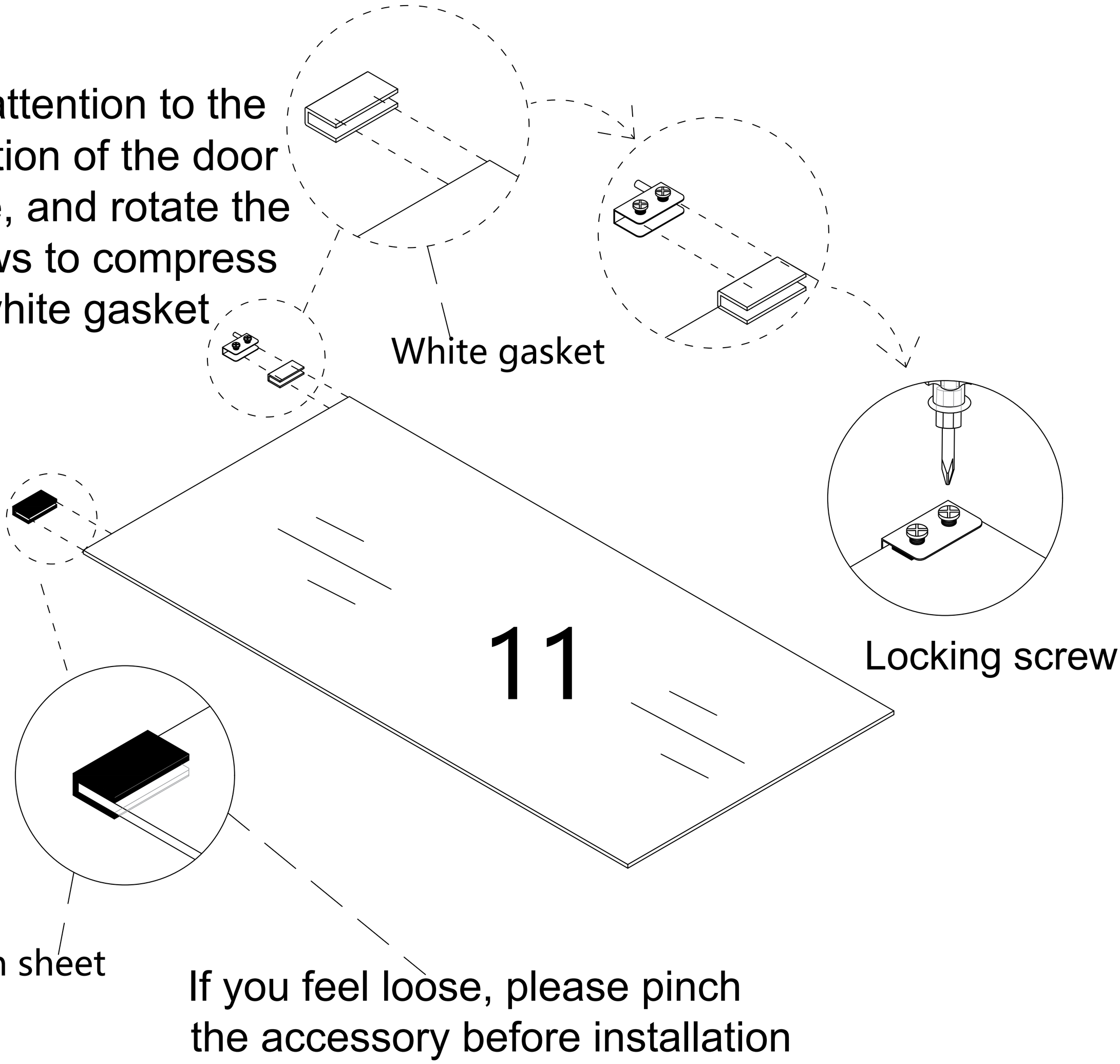

Please note: Do not use an electric drill.

Step 18

First, completely unscrew the screws on the parts

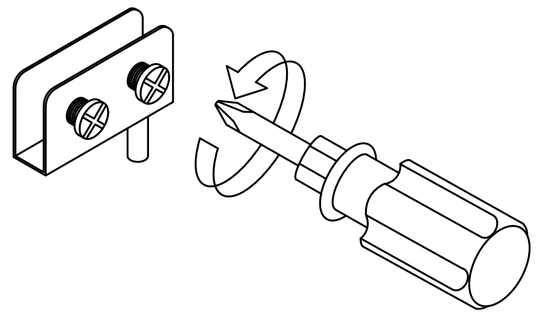

Place the white gasket first, then install the hinge, and finally tighten the screws.

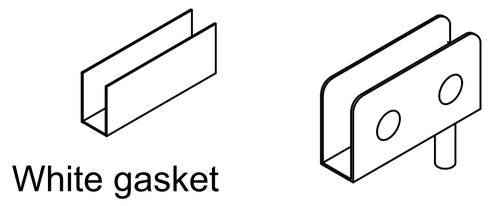

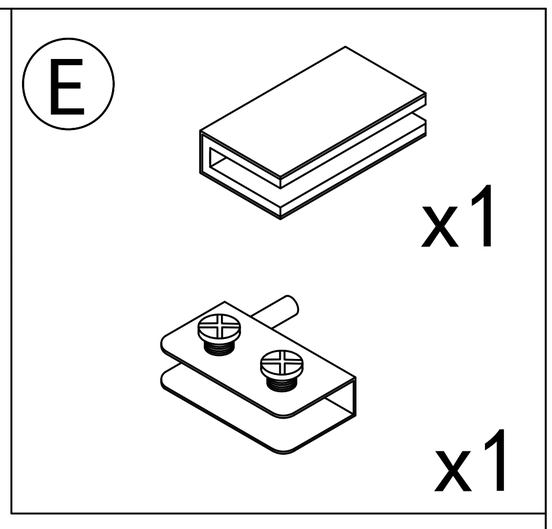

Pay attention to the direction of the door hinge, and rotate the screws to compress the white gasket

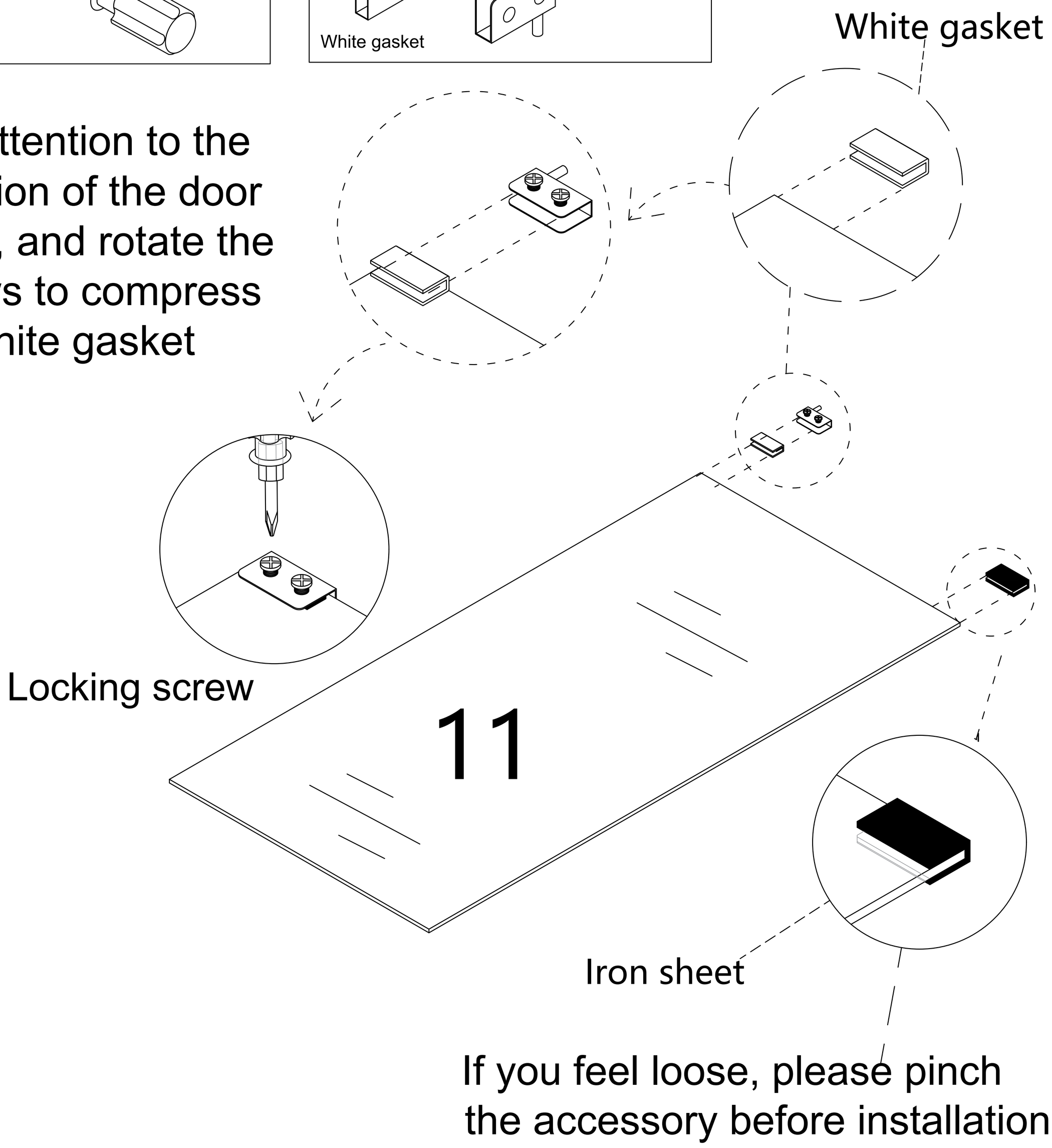

If you feel loose, please pinch the accessory before installation

Please note: Do not use an electric drill.

Step 19

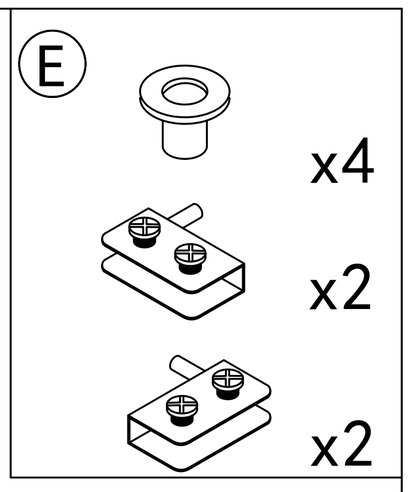

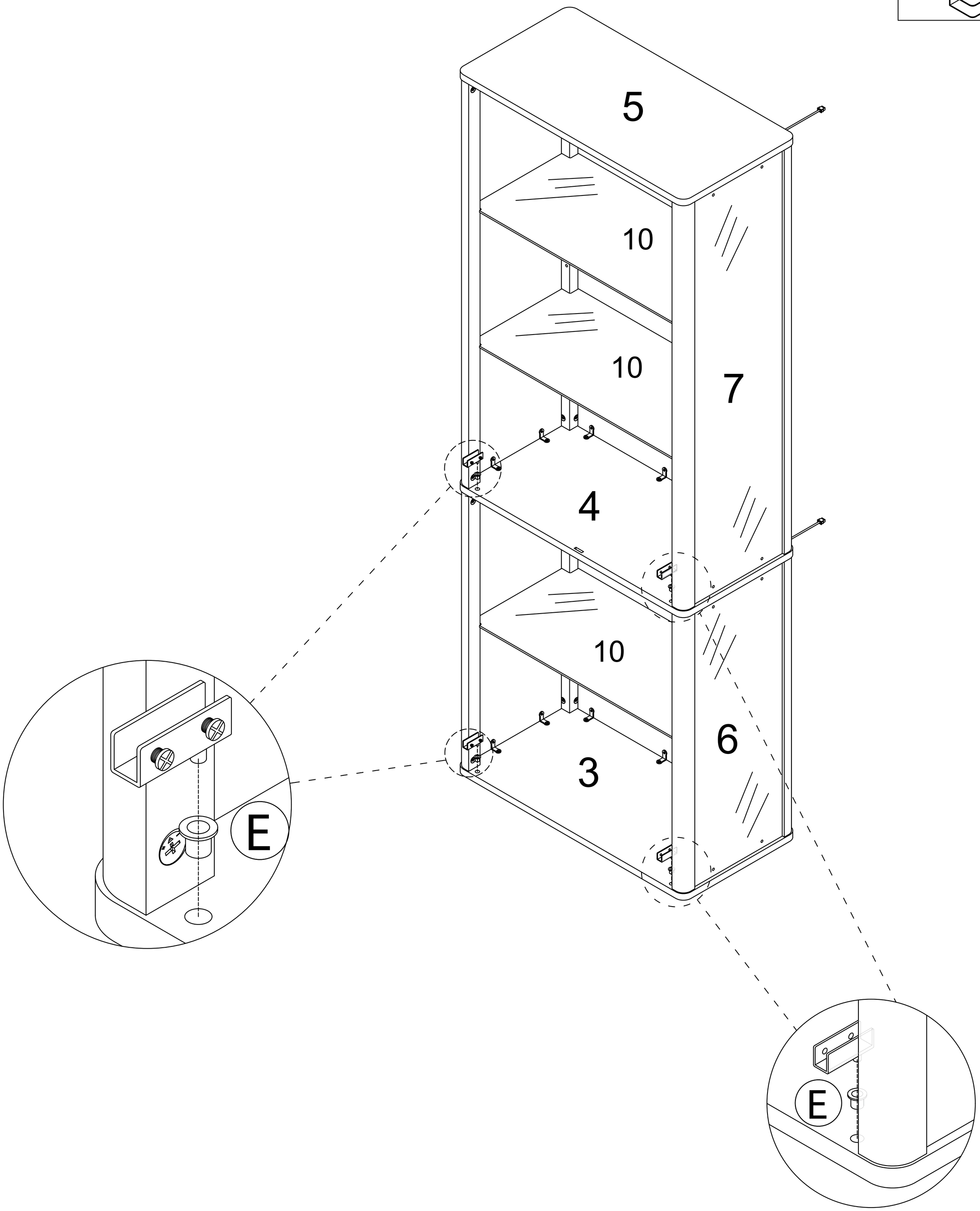

Step 20

Pay attention to the direction of the door hinge during installation

E

x2

When installing a glass door, it is recommended to have two people install it to avoid the glass door colliding or hitting oneself.

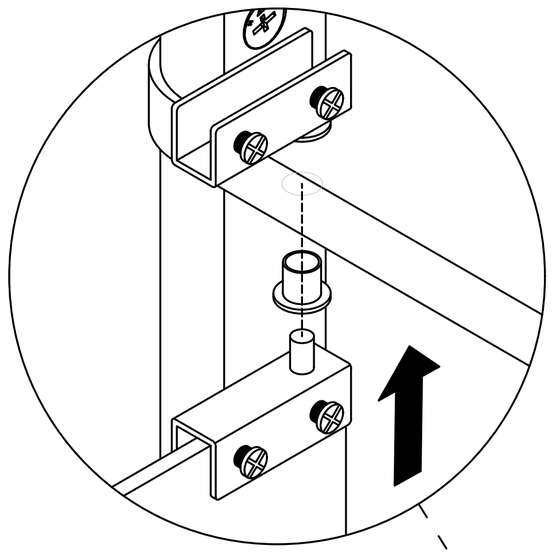

first

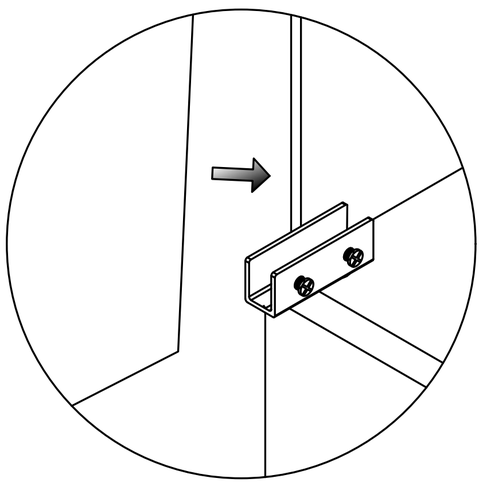

second

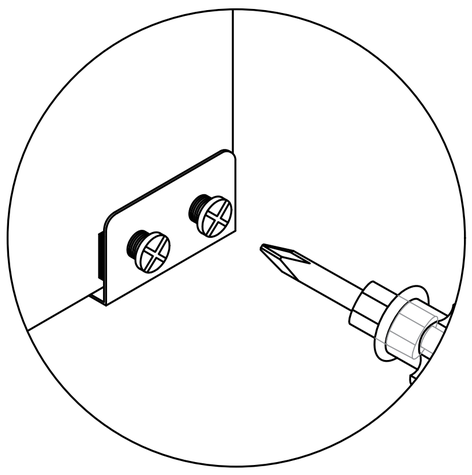

third

Locking screw

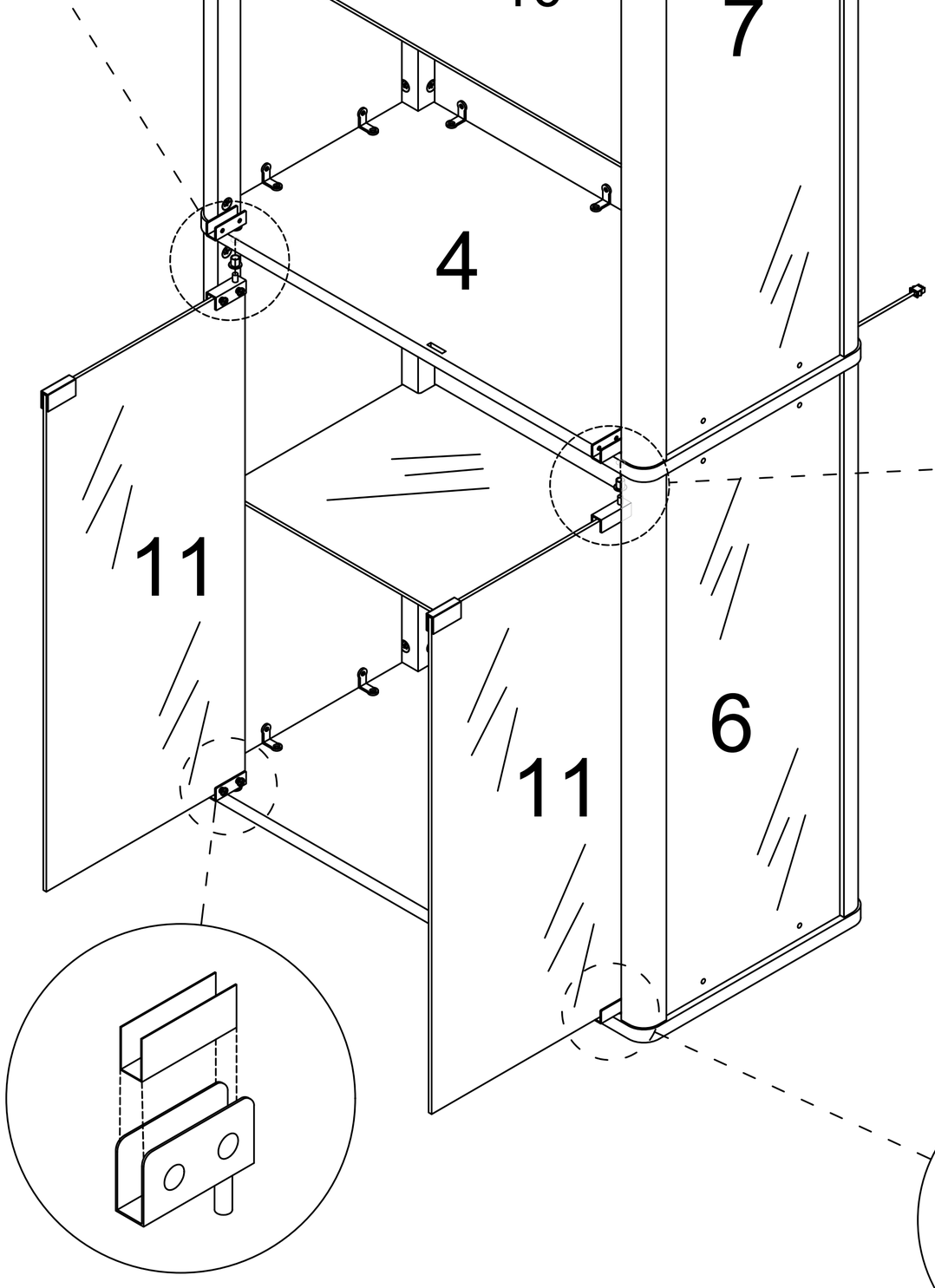

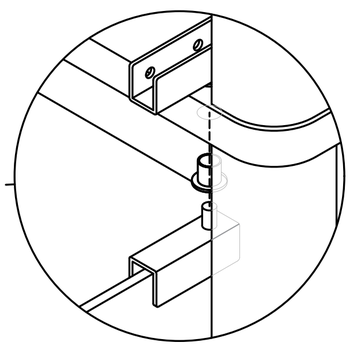

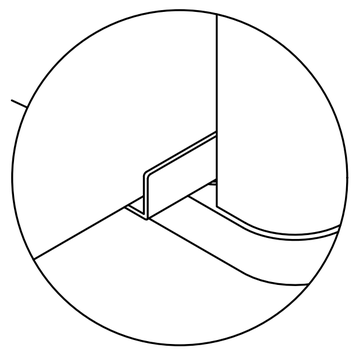

After aligning the glass door, tighten the screws to secure it.

Step 21

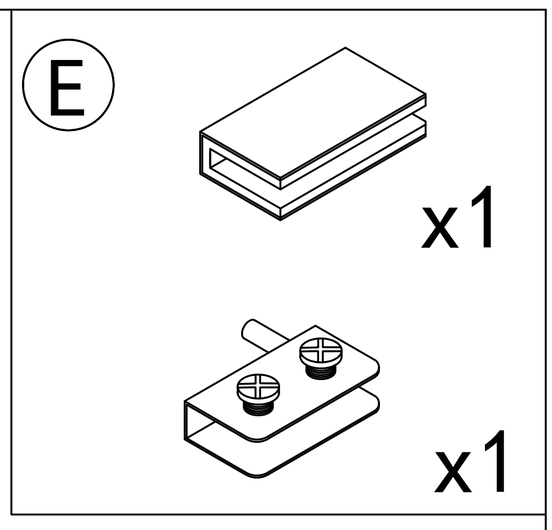

First, completely unscrew the screws on the parts

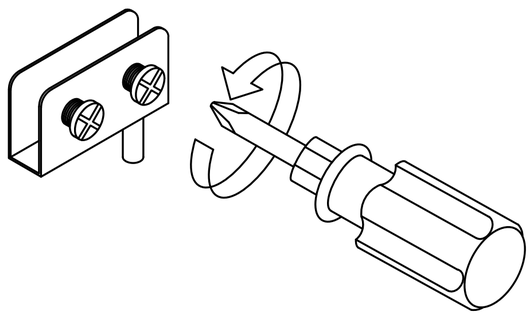

Place the white gasket first, then install the hinge, and finally tighten the screws.

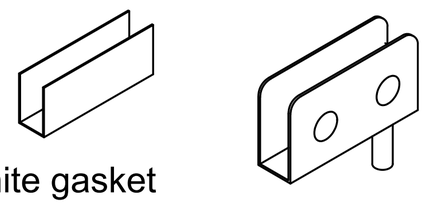

Pay attention to the direction of the door hinge, and rotate the screws to compress the white gasket

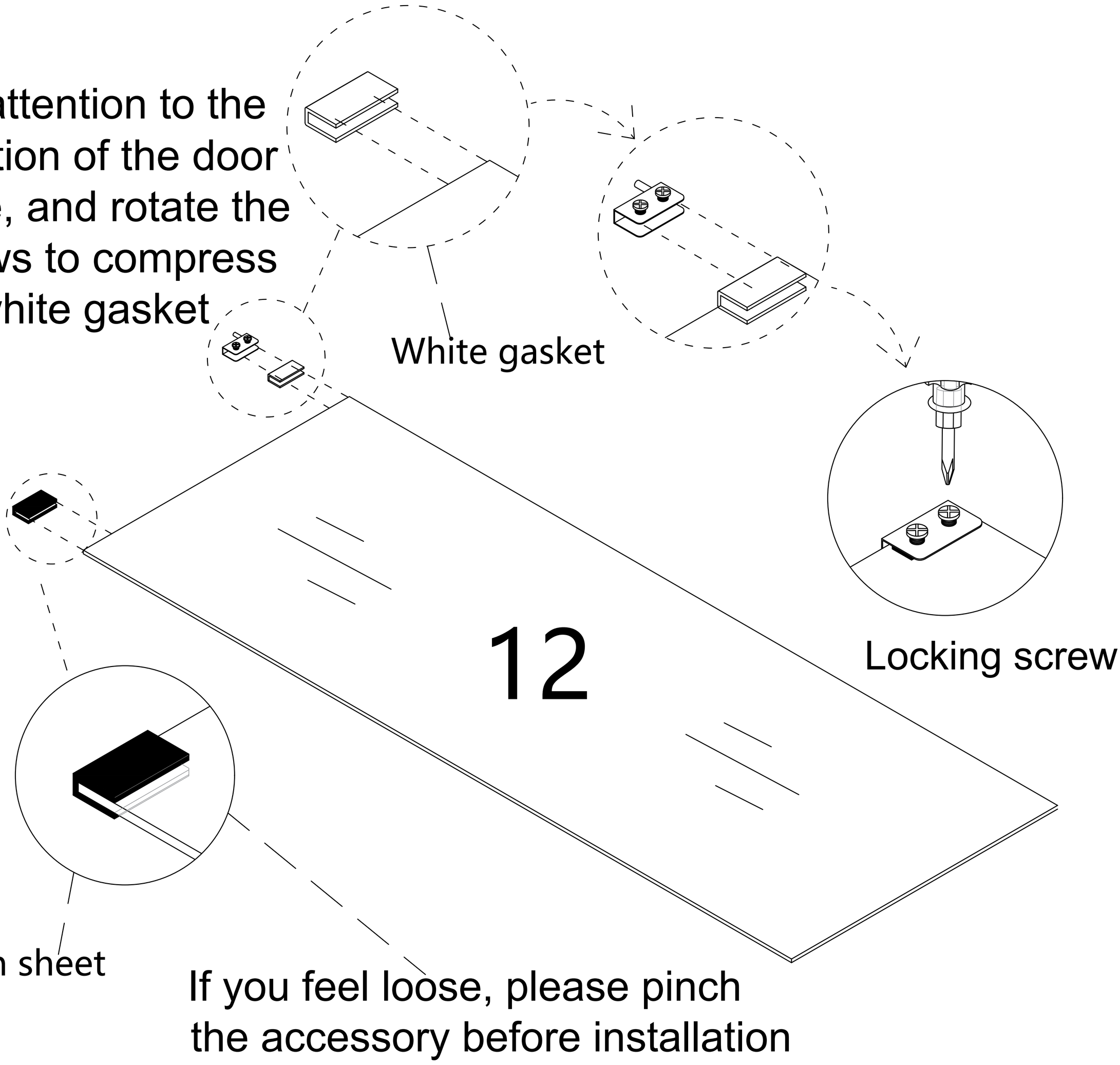

Please note: Do not use an electric drill.

Step 22

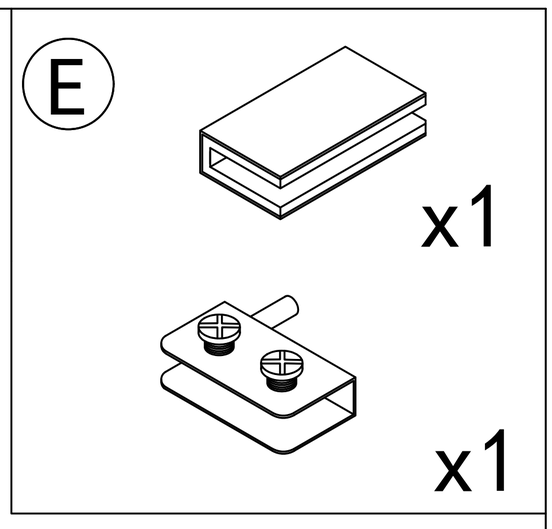

First, completely unscrew the screws on the parts

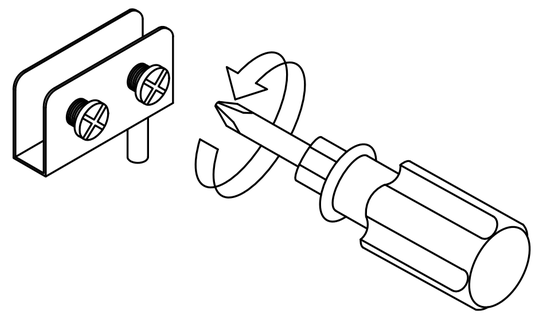

Place the white gasket first, then install the hinge, and finally tighten the screws.

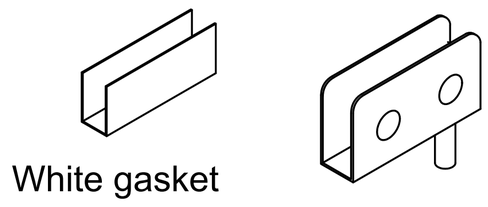

Pay attention to the direction of the door hinge, and rotate the screws to compress the white gasket

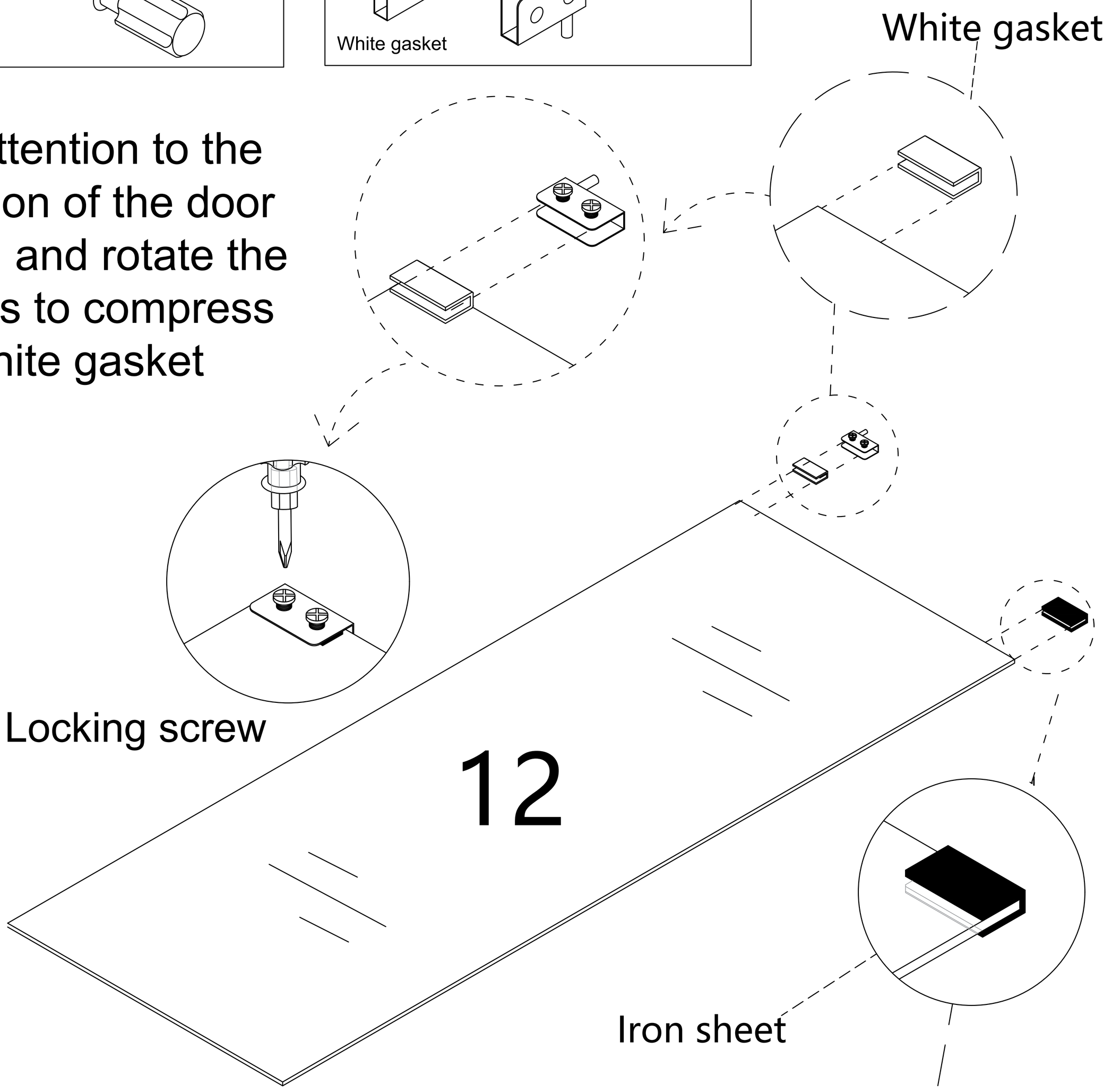

If you feel loose, please pinch the accessory before installation

Please note: Do not use an electric drill.

Step 23

Pay attention to the direction of the door hinge during installation

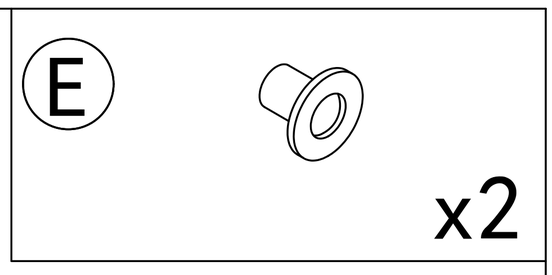

When installing a glass door, it is recommended to have two people install it to avoid the glass door colliding or hitting oneself.

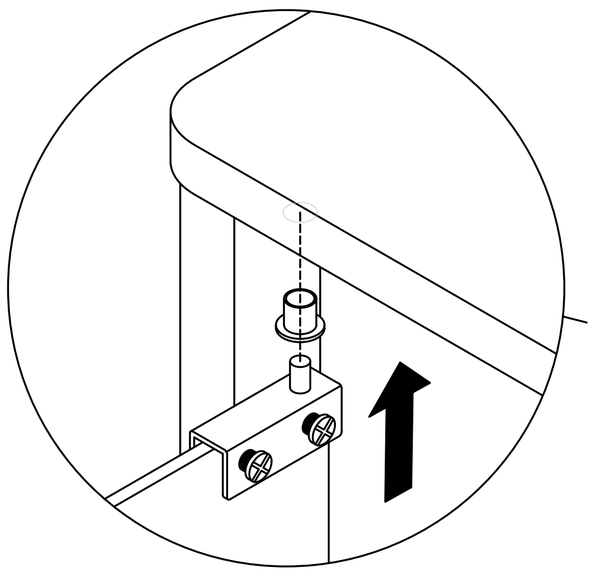

first

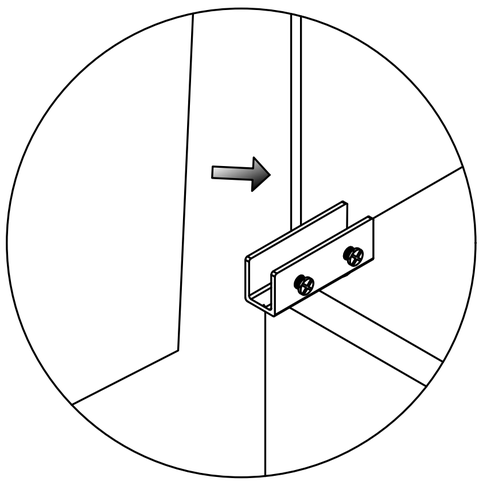

second

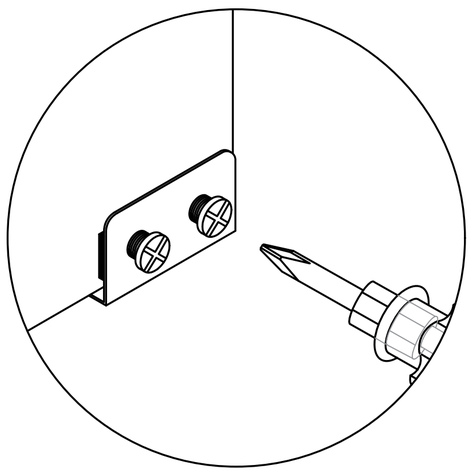

third

Locking screw

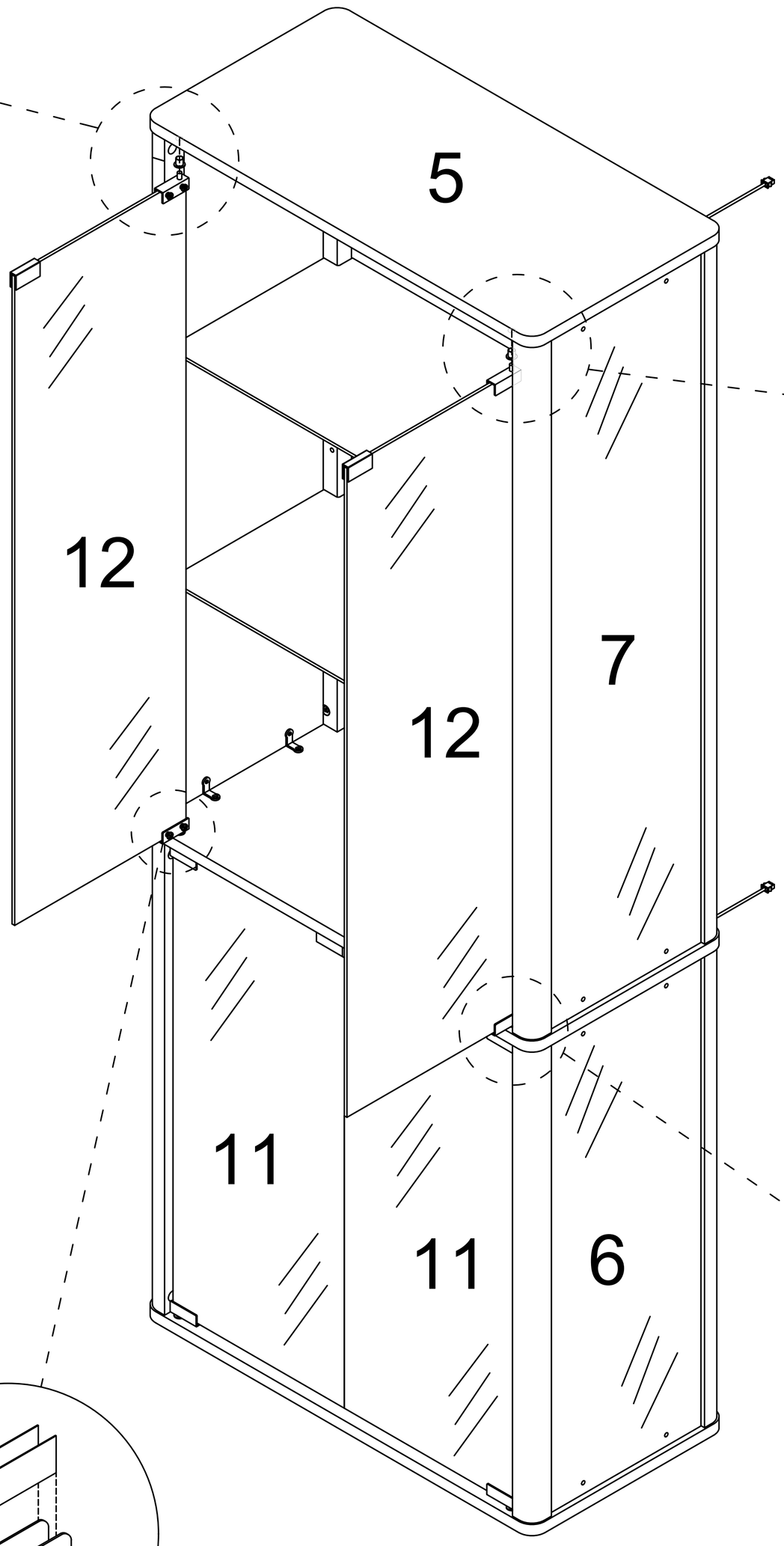

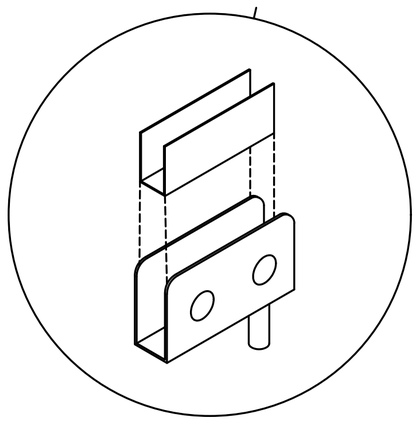

After aligning the glass door, tighten the screws to secure it.

Tip: Turn the door lock all the way to the right to lock it.

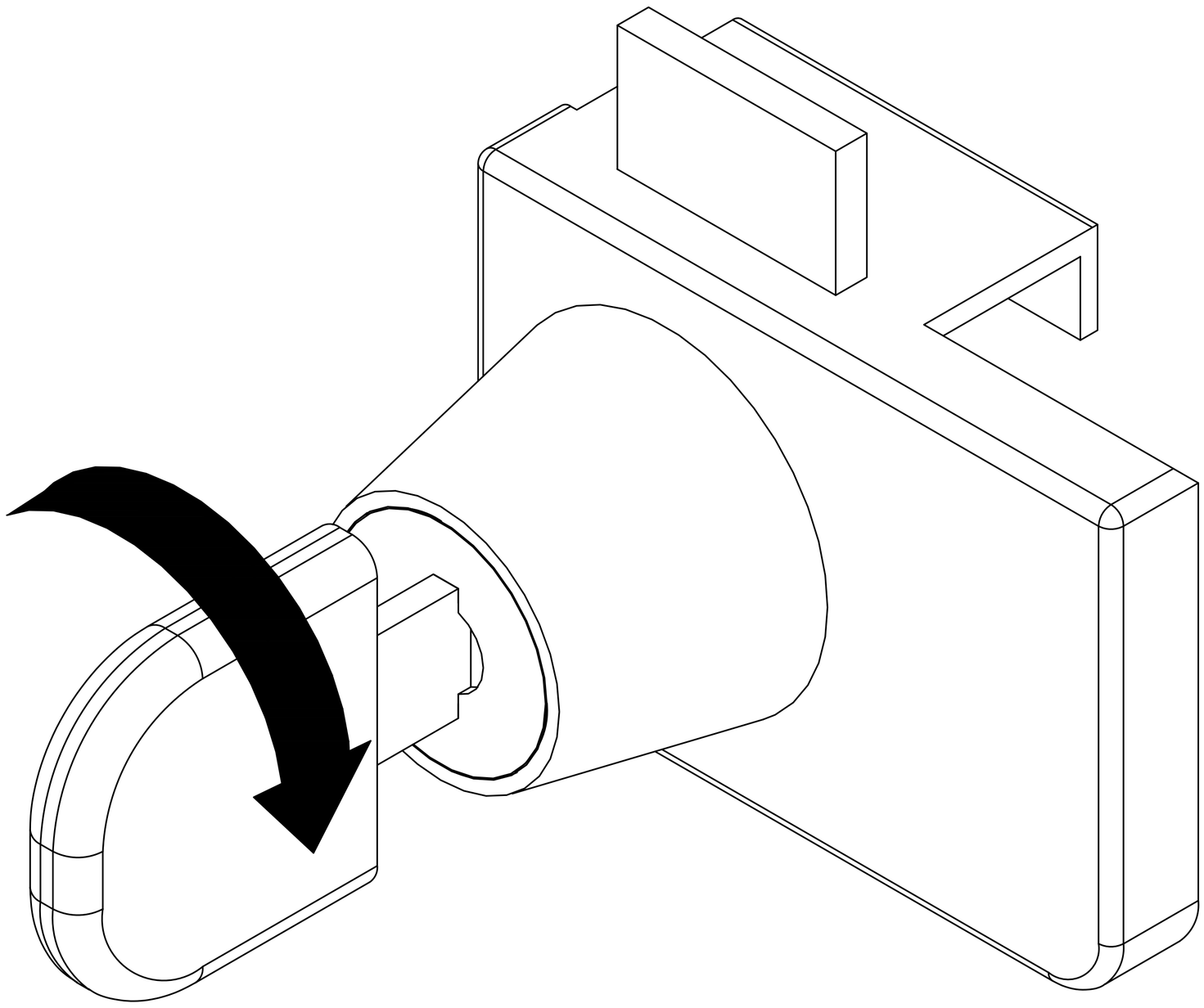

Tip: Turn the door lock all the way to the left to unlock it.

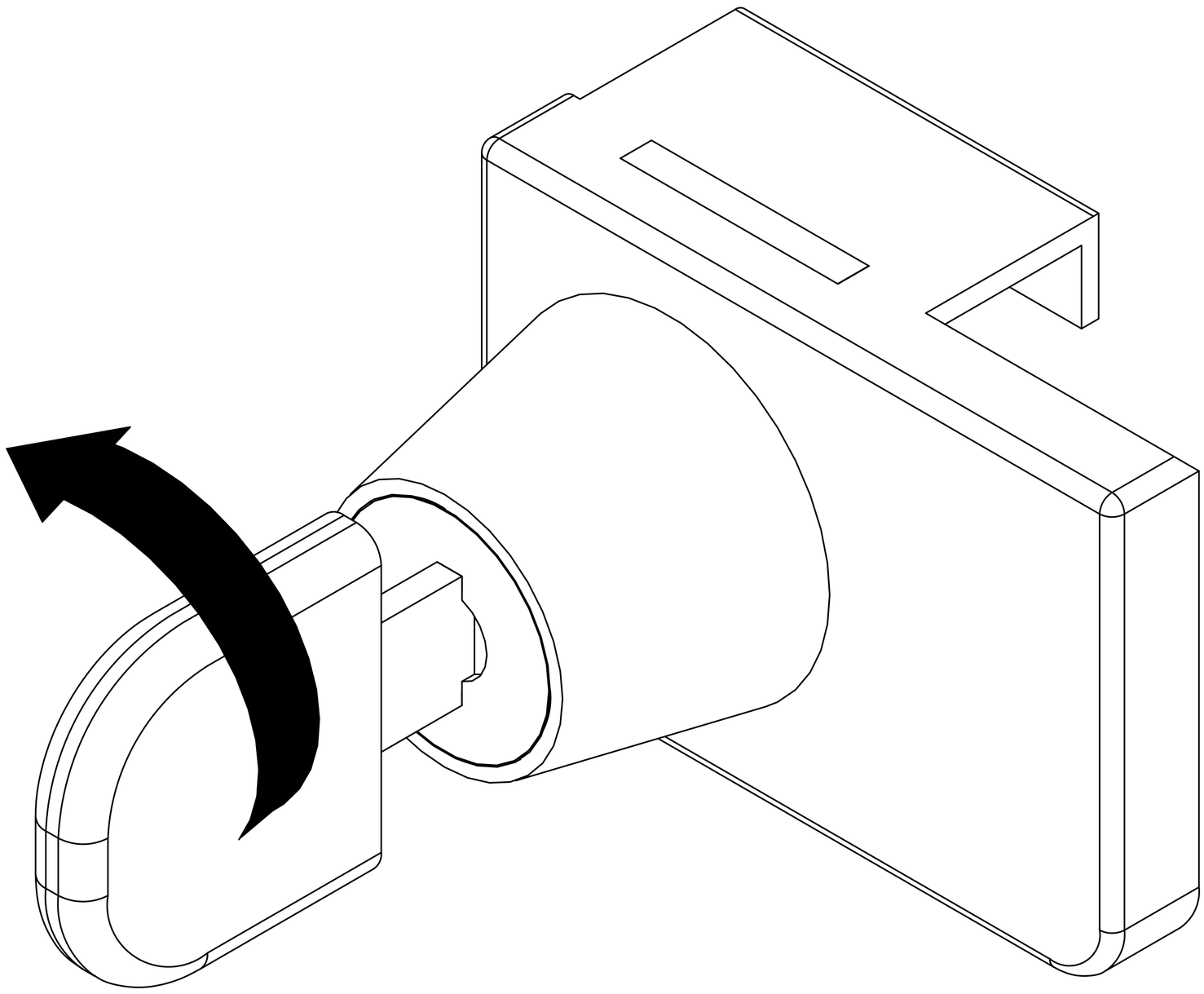

Step 24

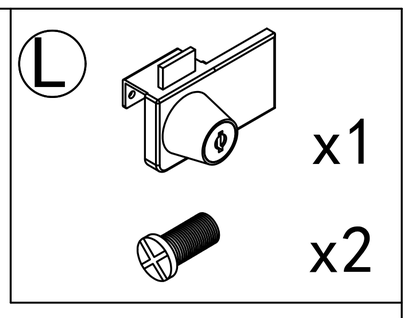

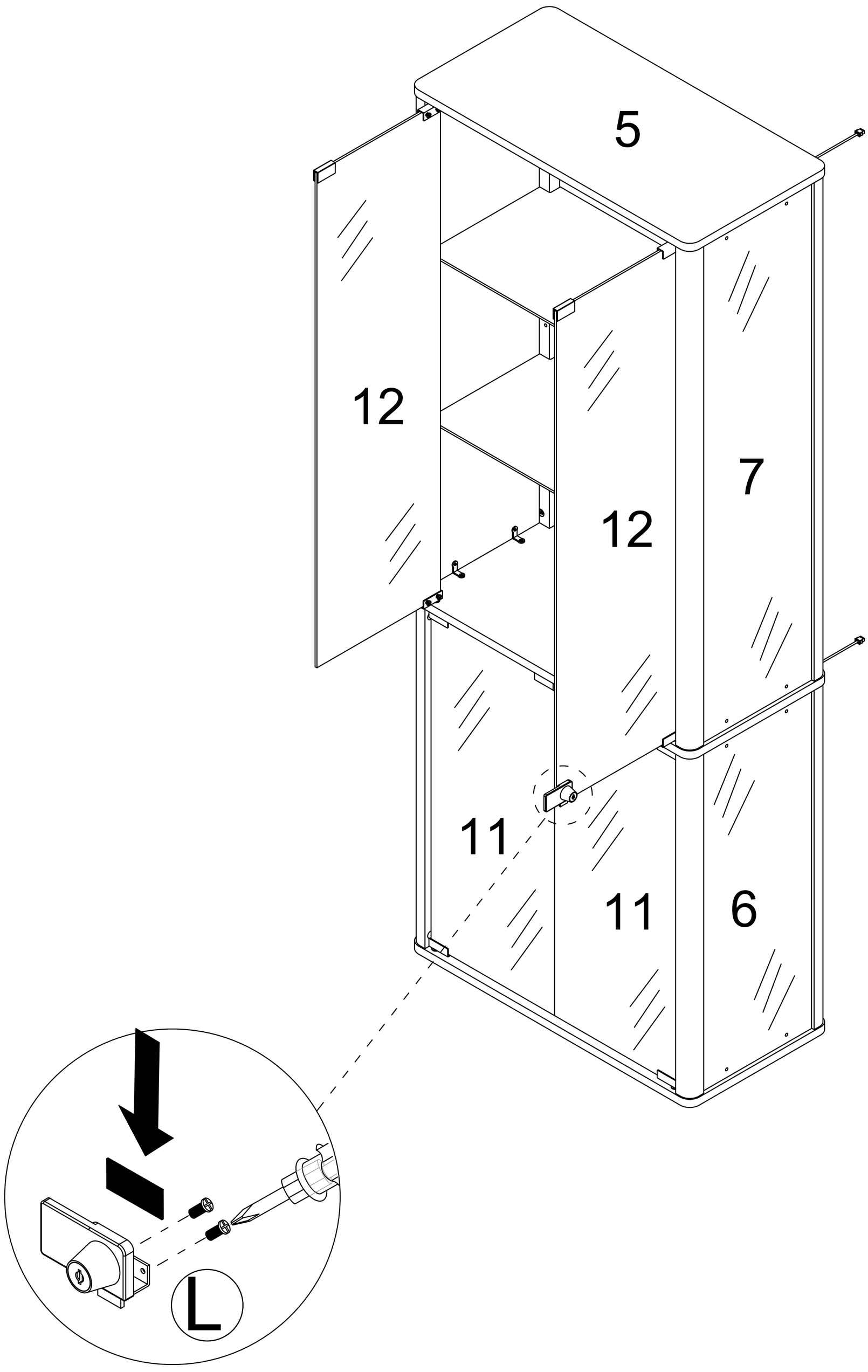

Step 25

Peel off the sticker on the back of the module to secure it in a place where it’s easy to reach.

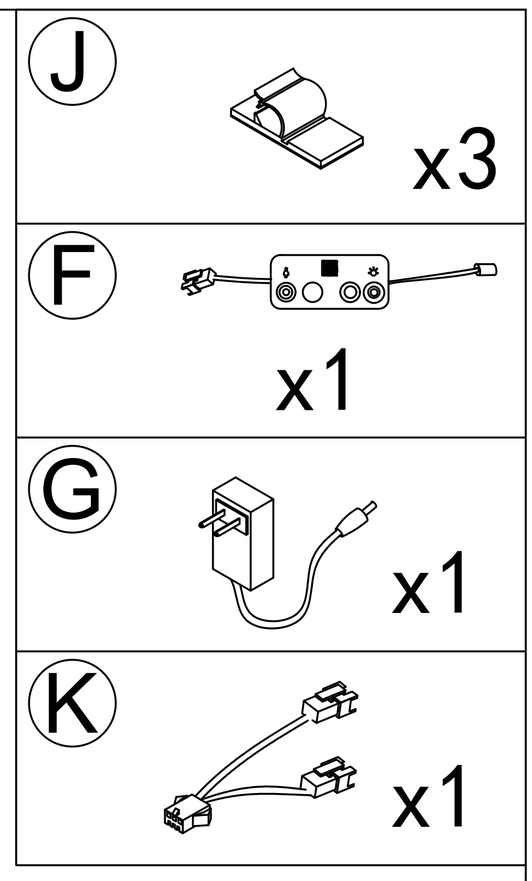

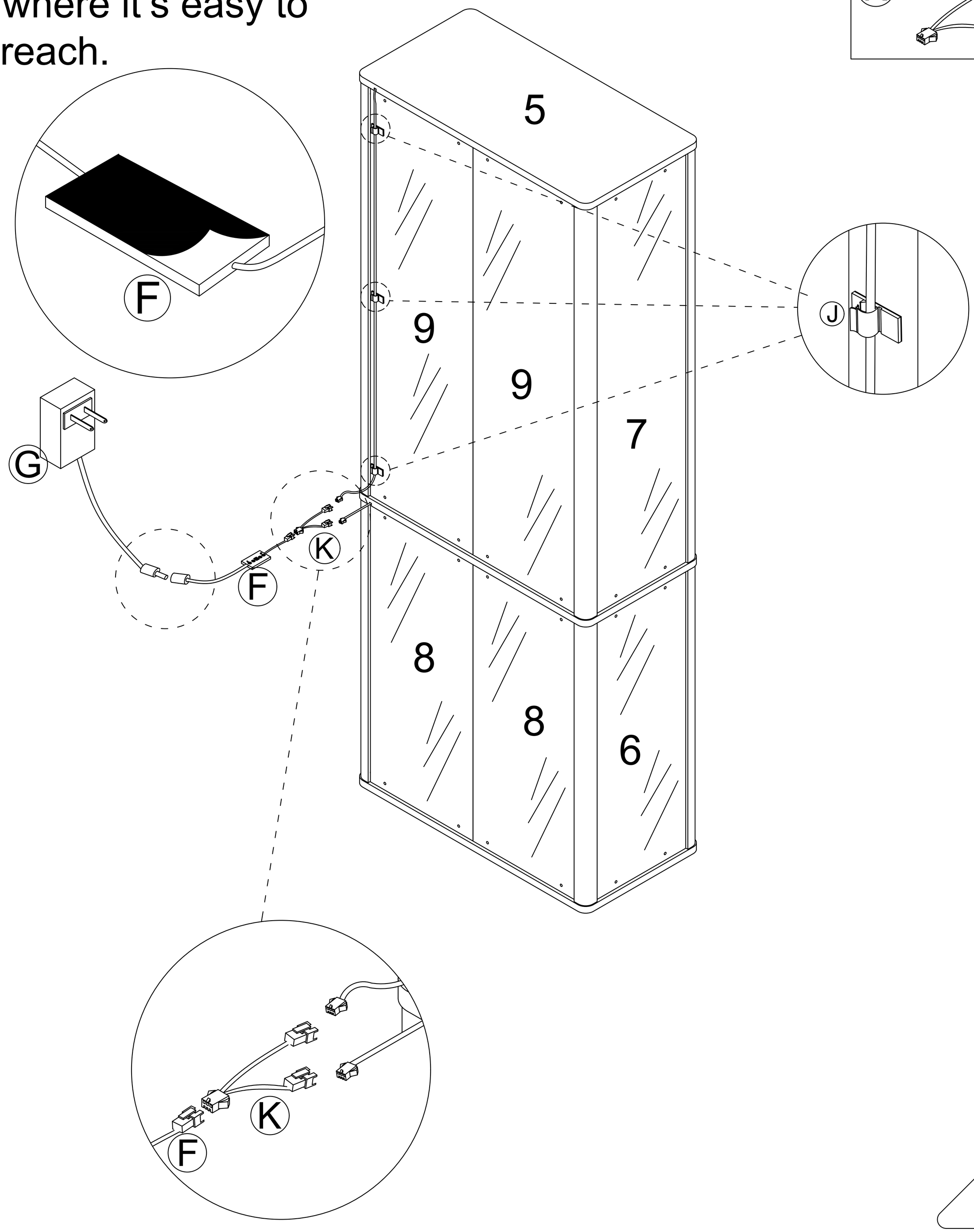

Step 26

Install as required

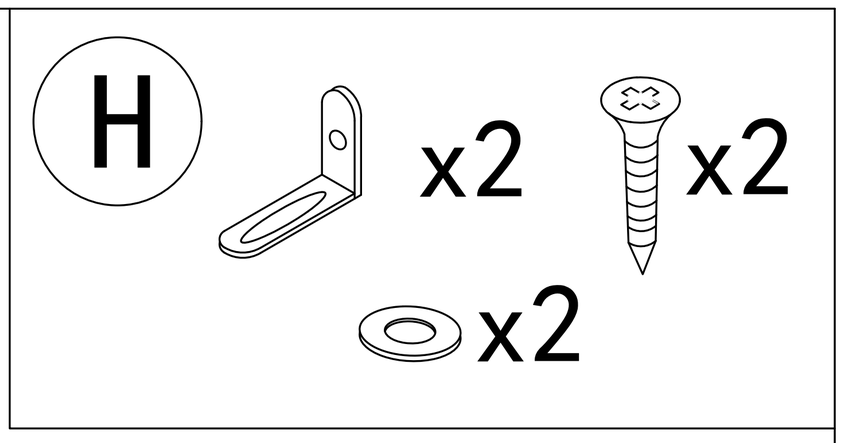

3.5x14mm

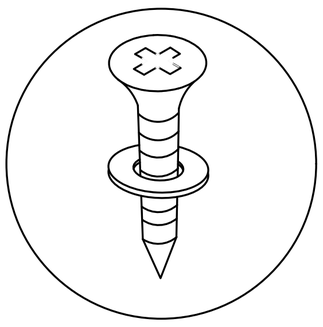

Install the anti fall hardware on the cabinet as shown in the picture first

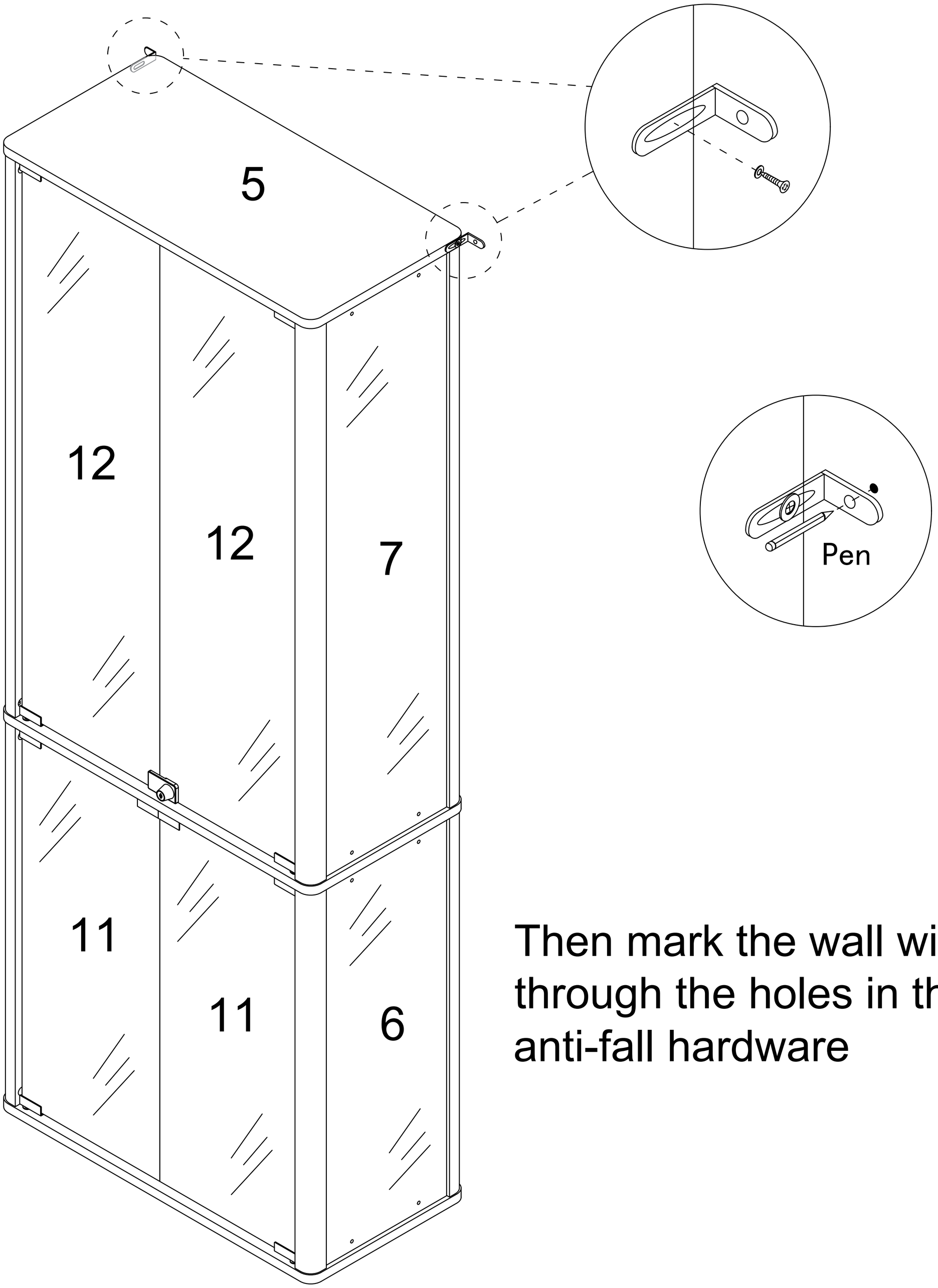

Then mark the wall with a pen through the holes in the anti-fall hardware

Step 27

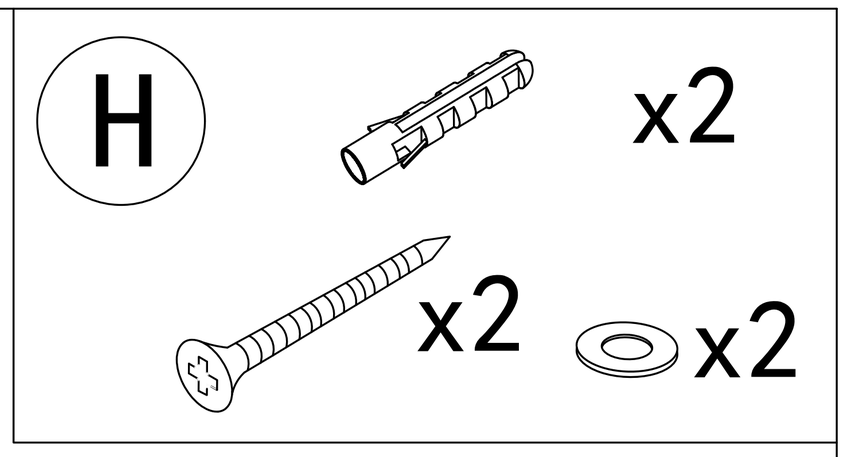

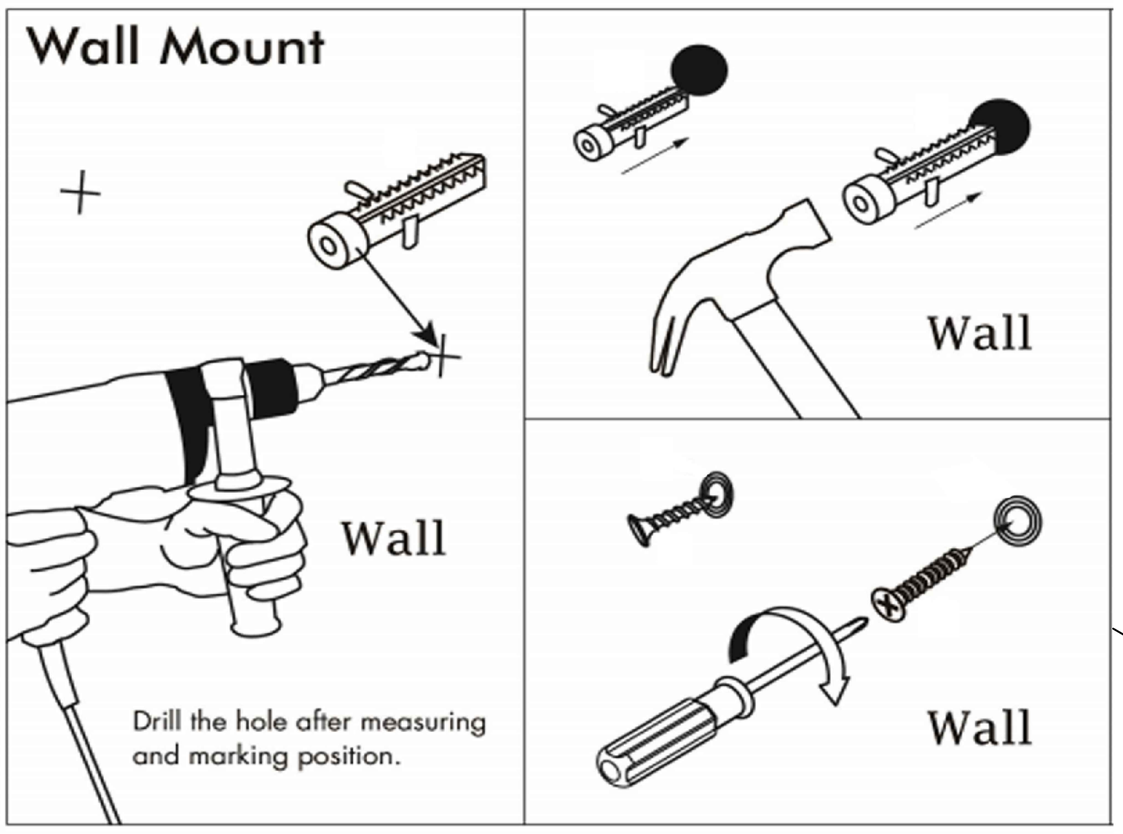

Drill the hole with an electric drill and punch in the colloidal particles

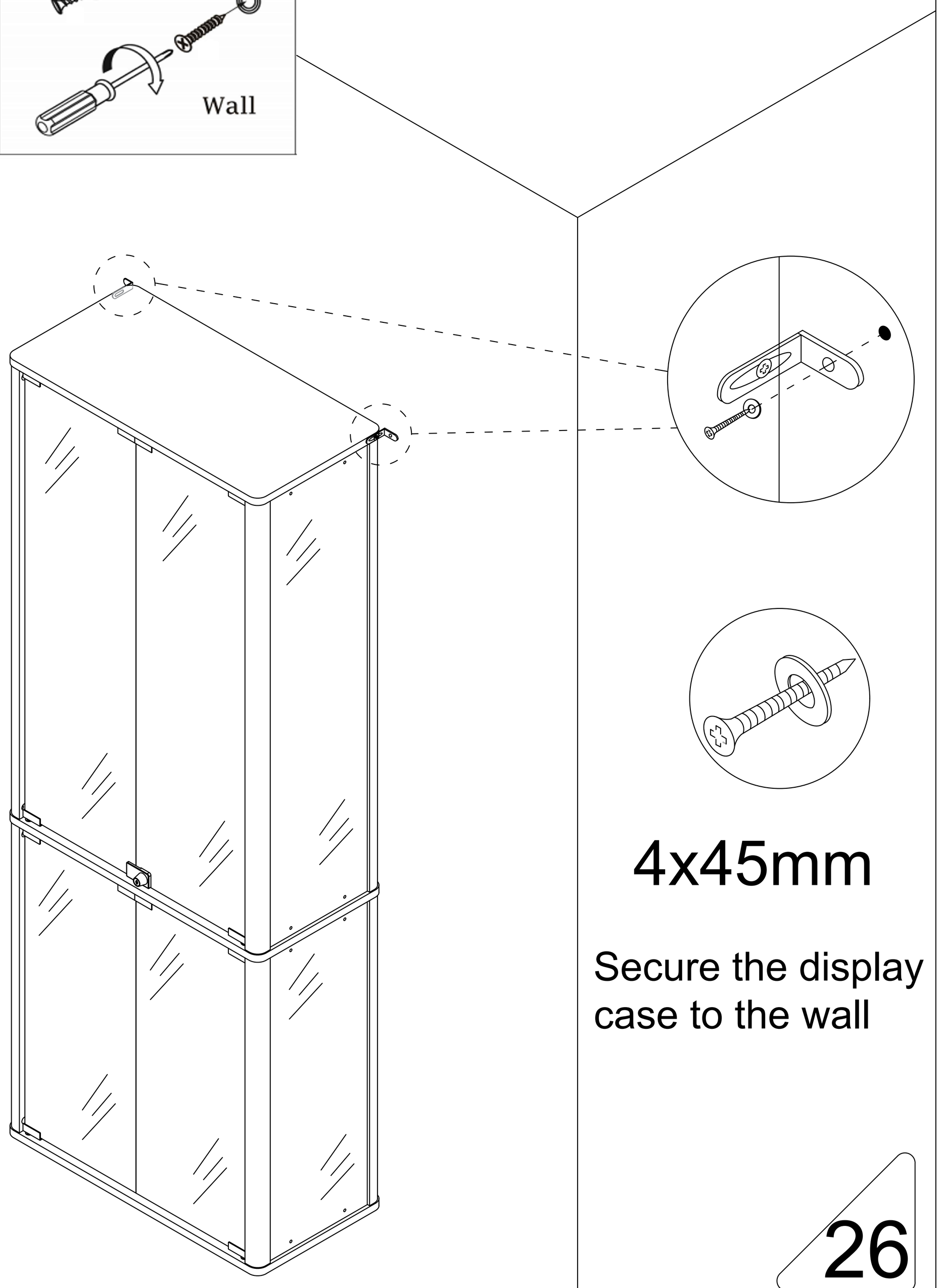

4x45mm

Secure the display case to the wall

Smart Box Plug Power Off

Scan the QR code to download the app

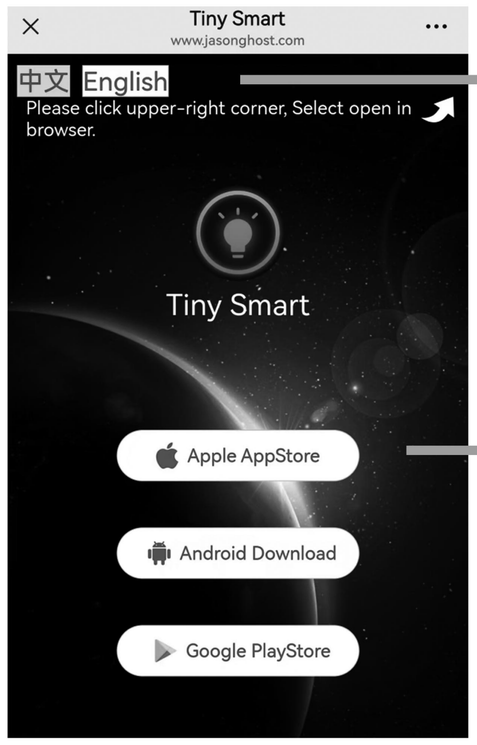

Select English Language

Select the corresponding device to download.
Note: If the download fails,
please turn off the "Enhanced Protection"
in the Pure Mode settings of the device.

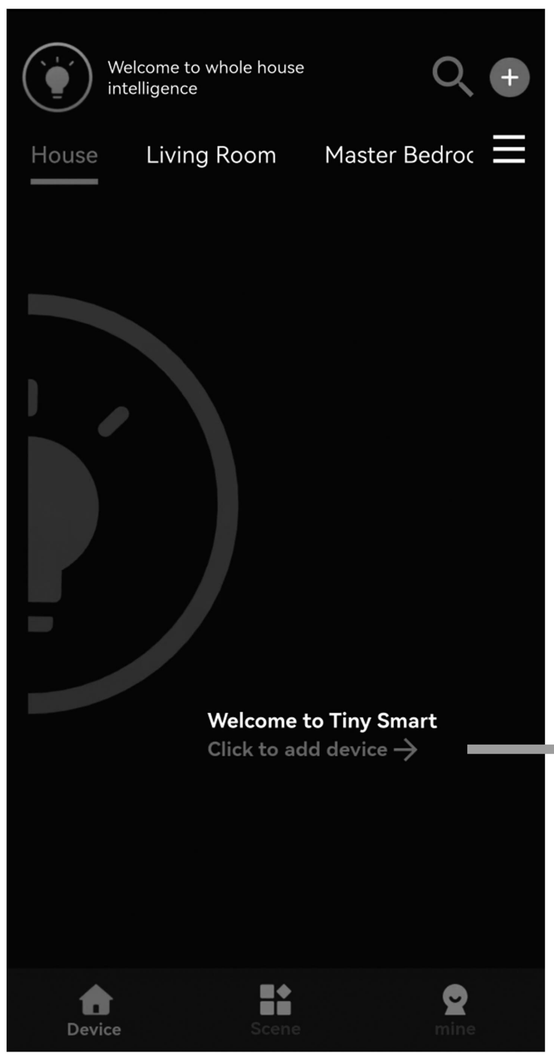

①

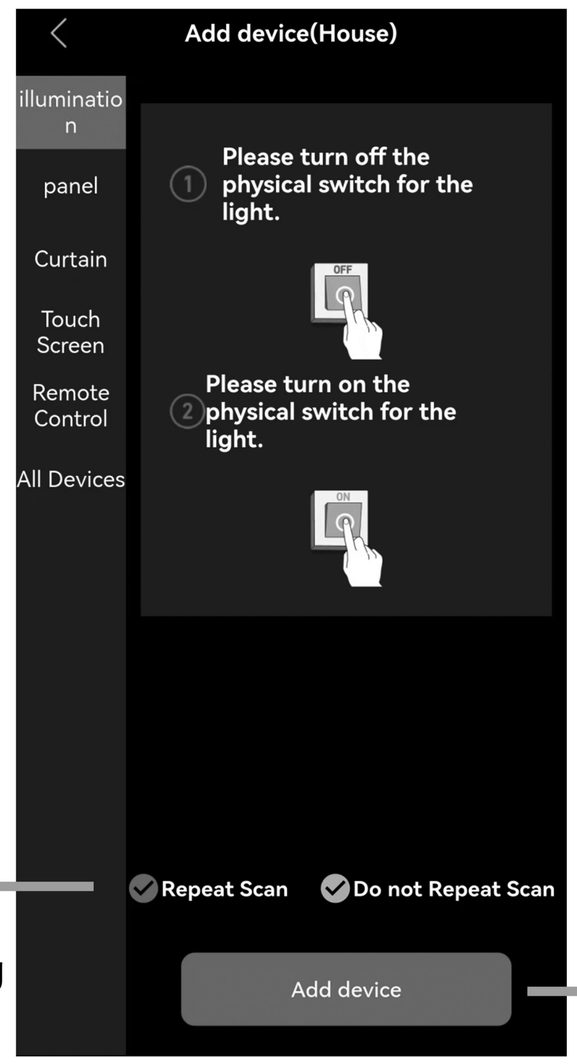

②

It turns blue after clicking

③

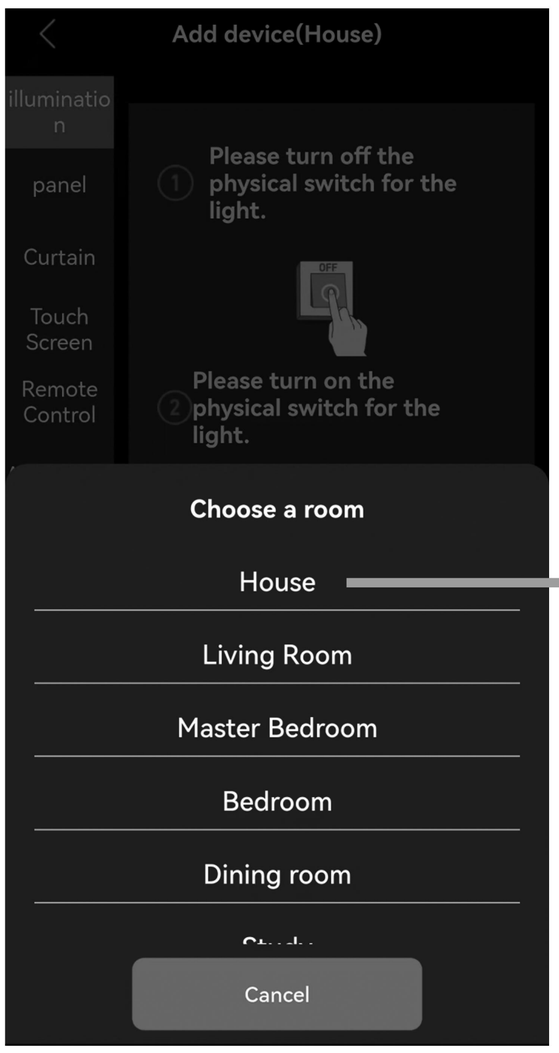

④

⑤ Unplug the smart box

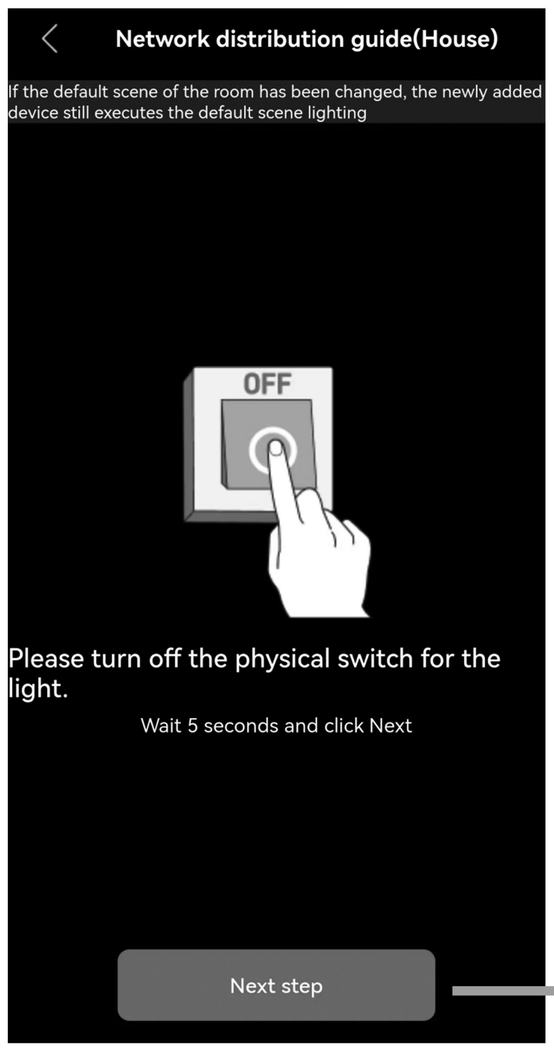

⑥

⑦Plug in the smart box power plug.

The appearance of this program icon indicates that the matching is complete

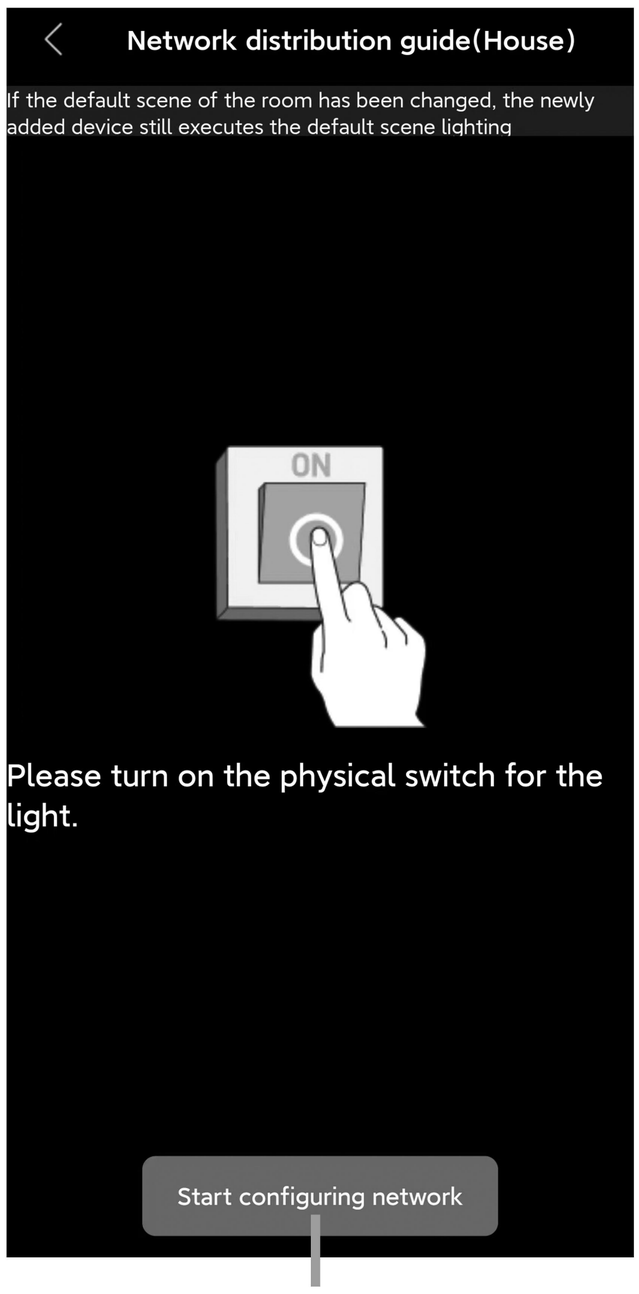

⑧

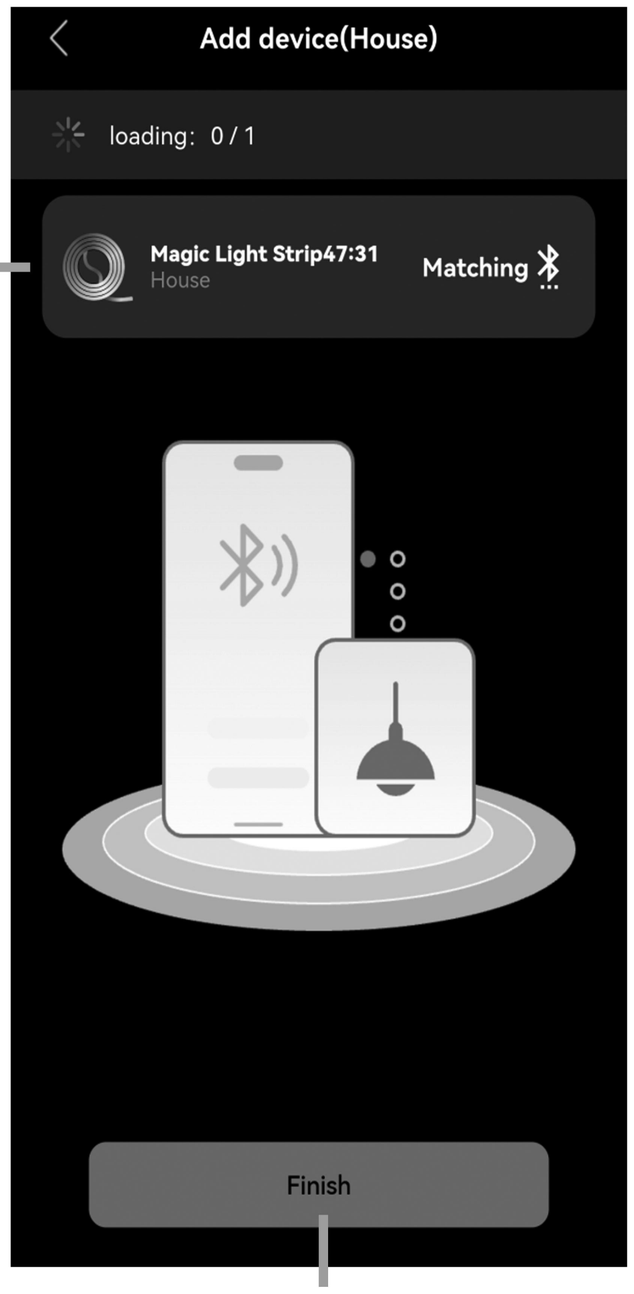

⑨

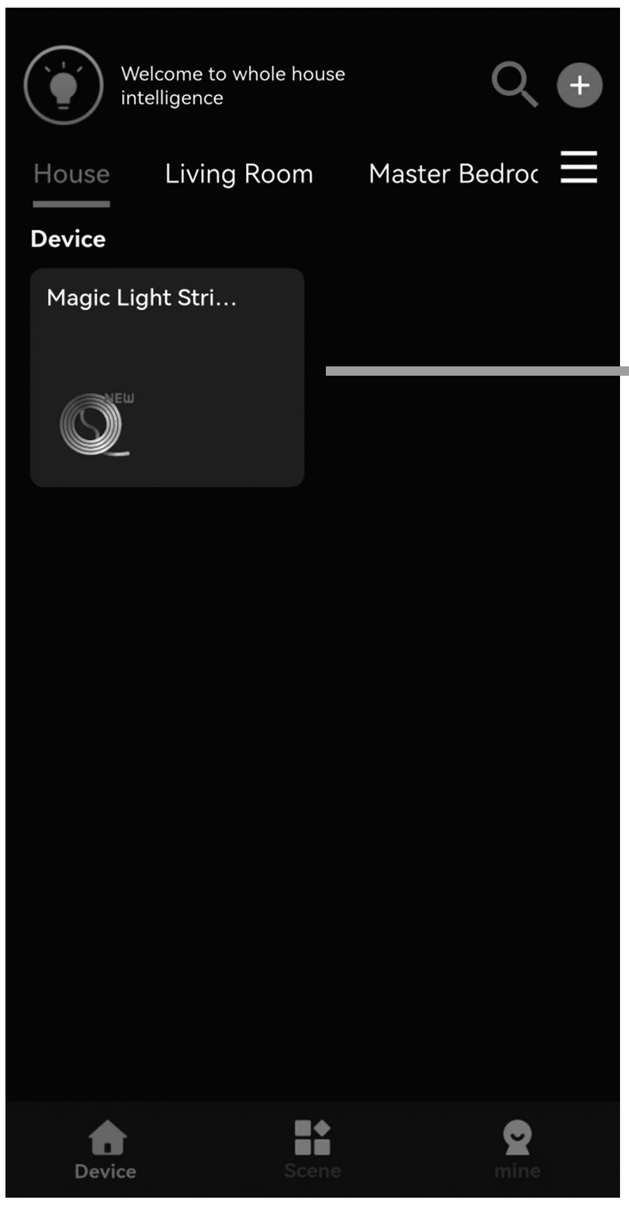

⑩

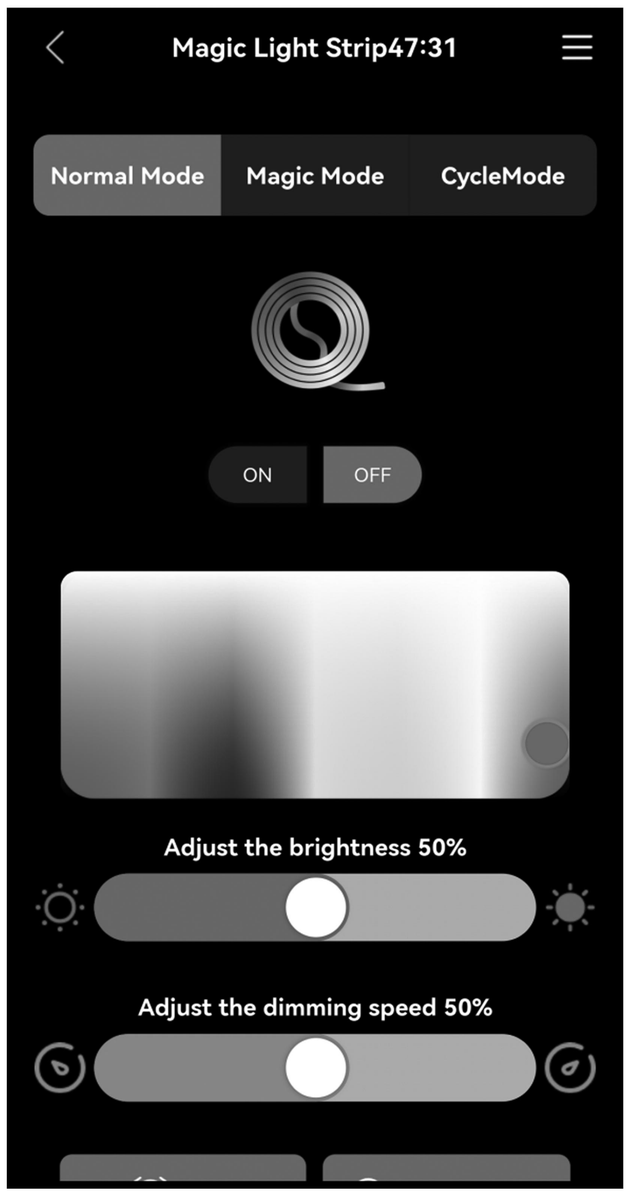

Now you can freely adjust the lighting according to your preferences

Scan code to download app

User's Guide

Thank you for purchasing this product.

To use this product, please plug it into a 12V DC power supply.

Please use if the product works normally after connecting to power.

Introduction

The box is an intelligent controller. With 4 touch buttons,

it can turn ON/OFF the light and turn ON/OFF the induction function,

change light colors, and adjust the light luminance.

The lights can be controlled through both the touch buttons and a dedicated app.

Operation

This touch button is the master switch of the smart box,

which can turn off all functions of the box and control the light strips on/off operation.

The operation that can be turned on and off with just a light tap.Press and hold to adjust the brightness.

Upon first power-up,the default light will be set to white.

This touch button is used to turn on/off the induction function.

A.touch this button once to turn on the induction function (indicator light on).

After the person leaves or remains stationary for more than 30 seconds, the light strip goes out;

people and objects within a range of 1 meters move will light up the light strip.

B. Long press this button for 0.5 seconds to turn off the human body induction function(the indicator light goes out).

At this point, Keep the light strip as it was before turning off and no longer be affected by humanand object activities.

By default, induction function is enabled when powered on.

This touch button is the Dynamic Phantom Color Mode, which includes 5 magical lighting effects.

Simply tap to cycle through the options.(Attention:This mode cannot adjust the brightness)

This touch button controls the single-color switching function of the light strips,

offering 7 different colors to choose from.

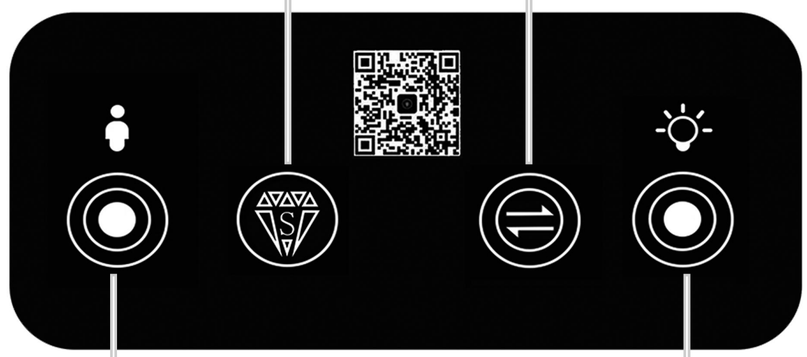

ATTENTION PLEASE

1. If there is no touch response suddenly, Re-plug the power to reset the touch static electricity.
2. If you have any questions when installing, please feel free to contact us. Thank you.