ASSEMBLY INSTRUCTIONS

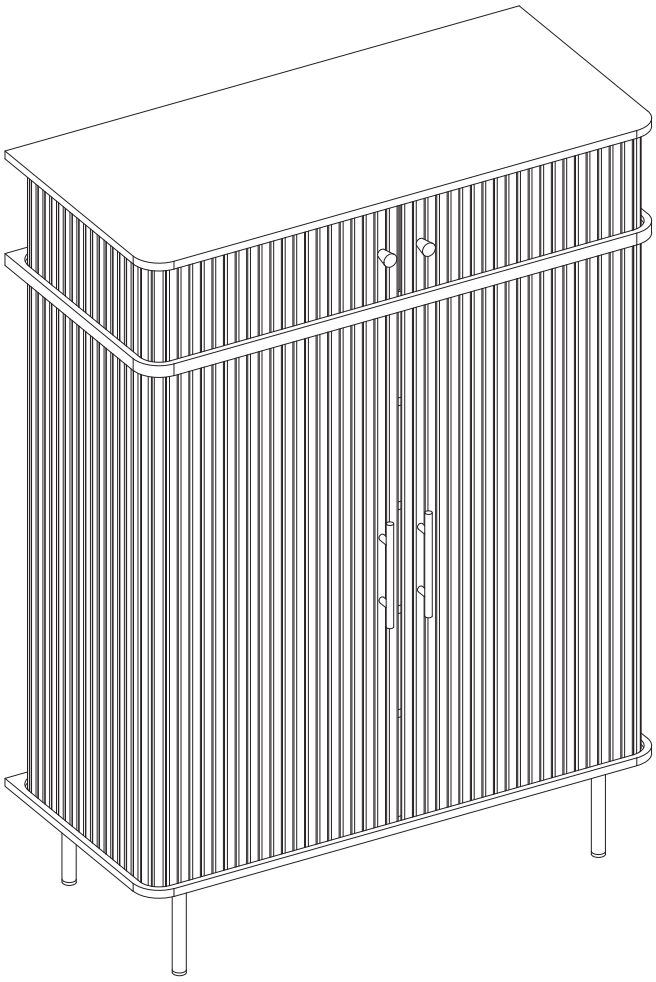

Thanks for purchasing from us. If you need tutorial videos, FAQs and more help, Please scan the QR code to get your after-sales service.

Contact us Email: **service2025514@gmail.com**

PART LIST

1 x1 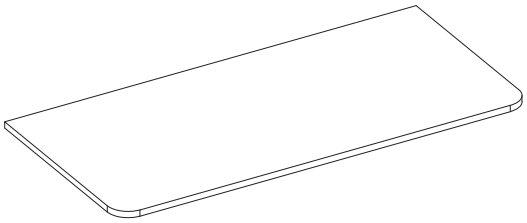	2 x1 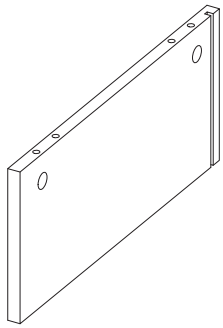
3 x1 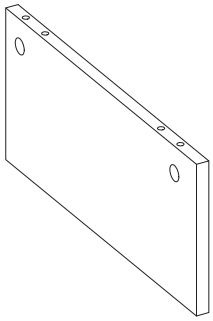	4 x1 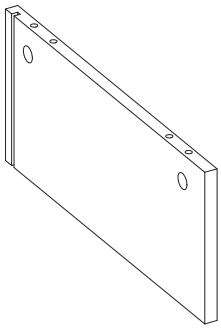
5 x1 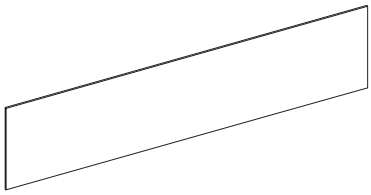	6 x1 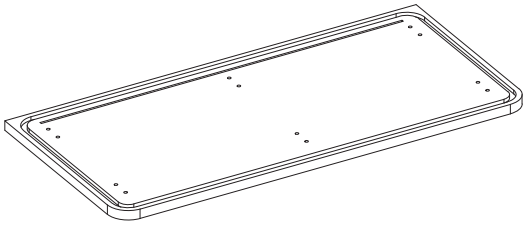
7 x1 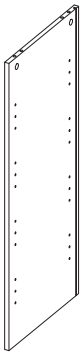	8 x1 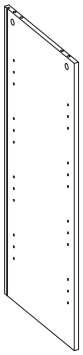

PART LIST

9 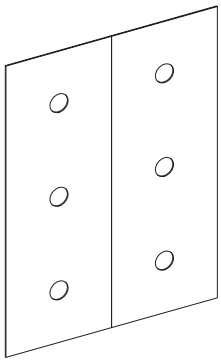 x1	10 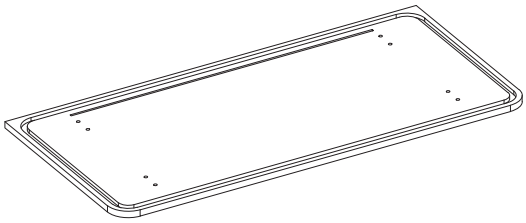 x1
11 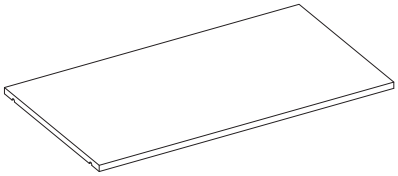 x4	12 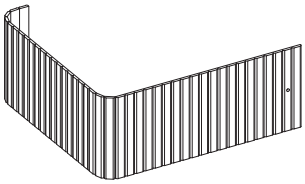 x2
13 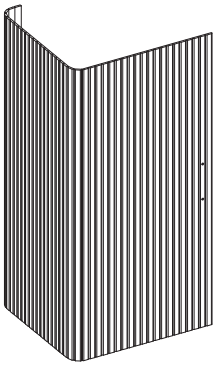 x2	14 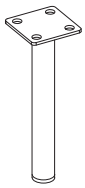 x4

ASSEMBLY INSTRUCTION

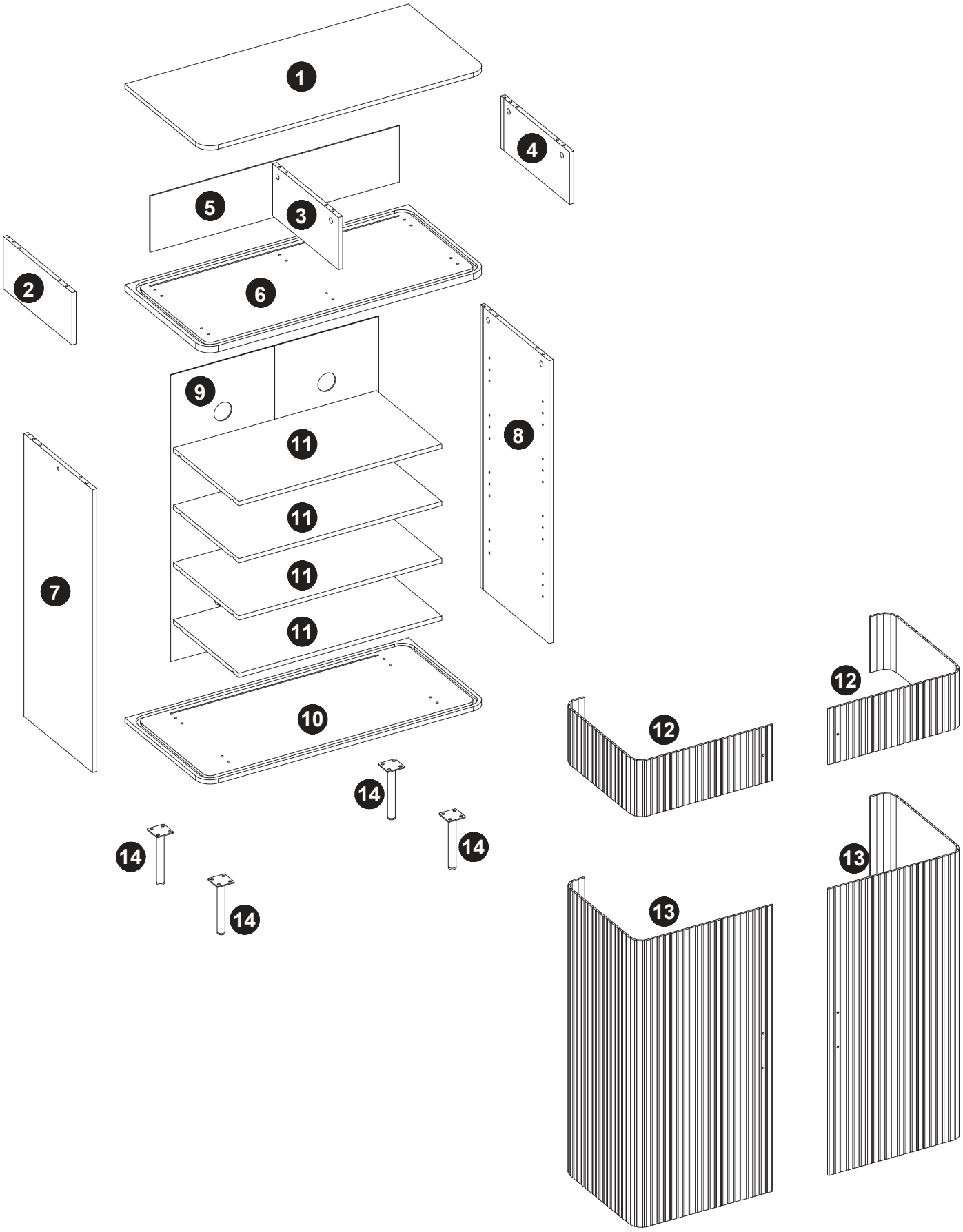

PART LIST

A 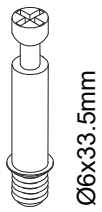 x10+1	B 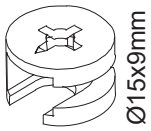 x10+1	C  x20+2	D 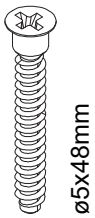 x10+1	E 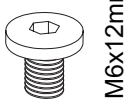 x18+1	F 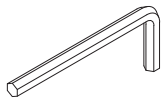 x1
G 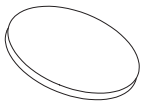 x10+1	H  x2	I  x6+1	J 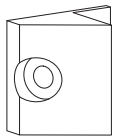 x12	K 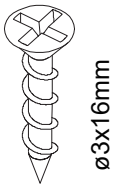 x12	L 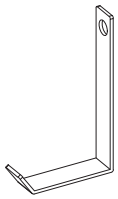 x2
M 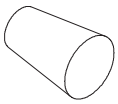 x2	N 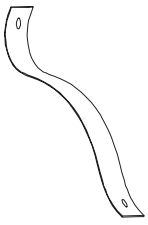 x2	O 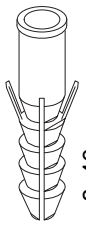 x2	P 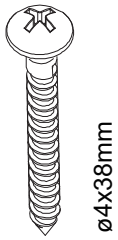 x2	Q  x2	R 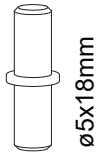 x16+2

ASSEMBLY INSTRUCTION

1

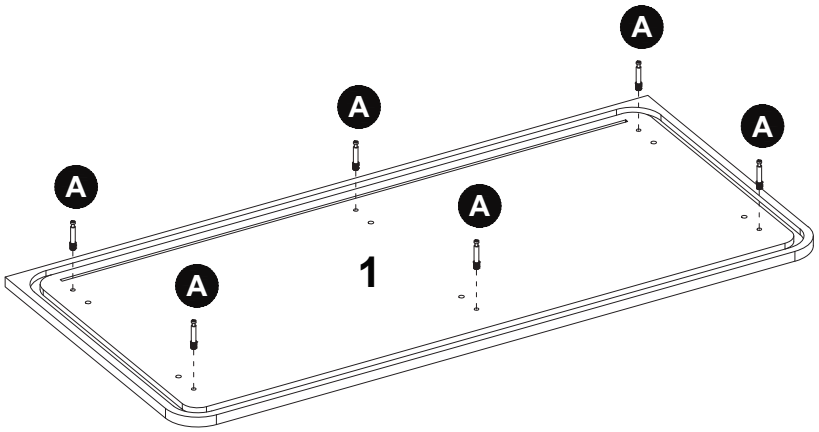

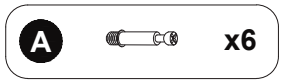

2

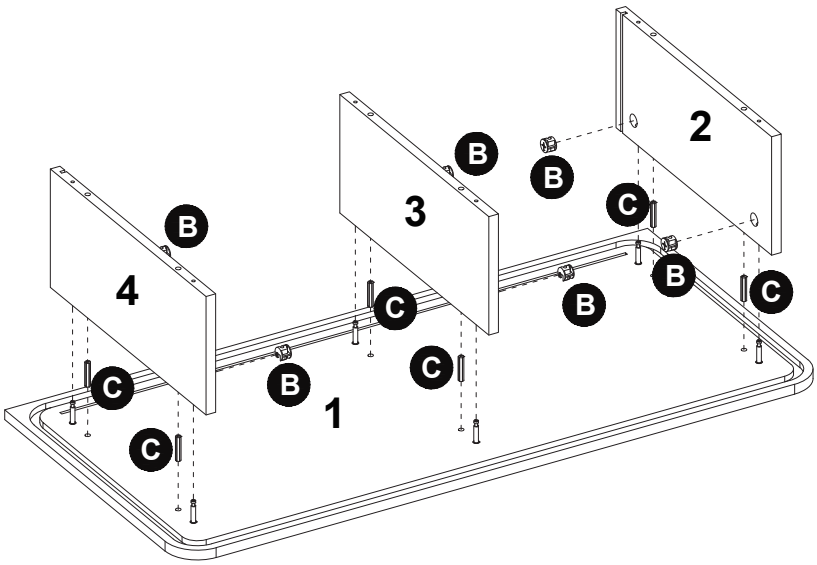

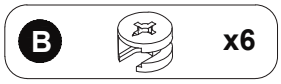

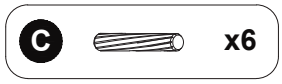

3

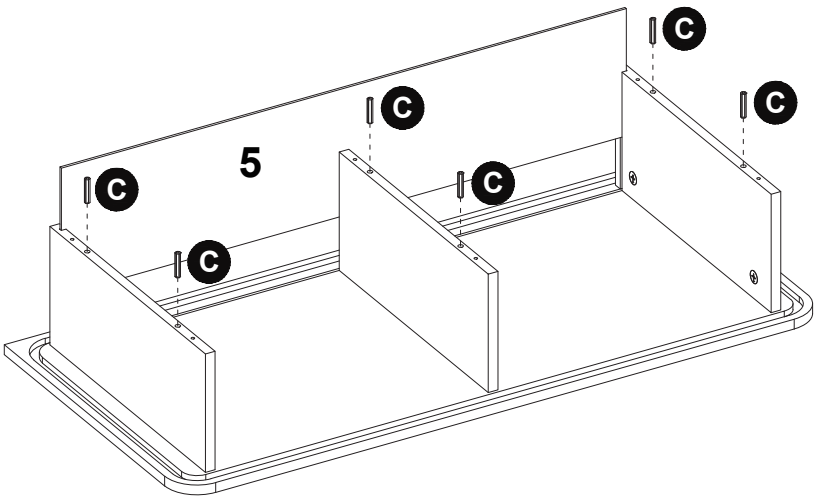

C x6

4

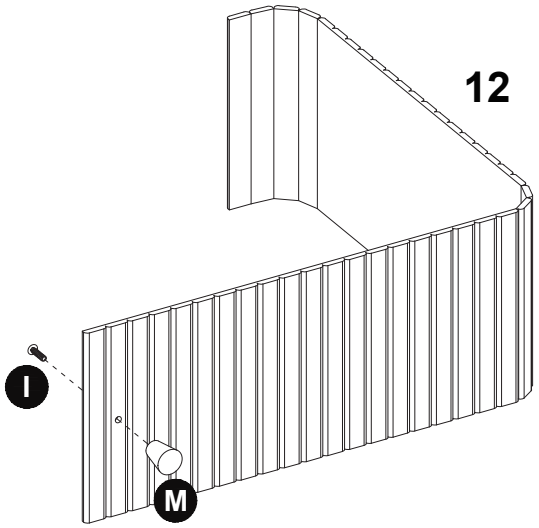

x2

M x2

I x2

5

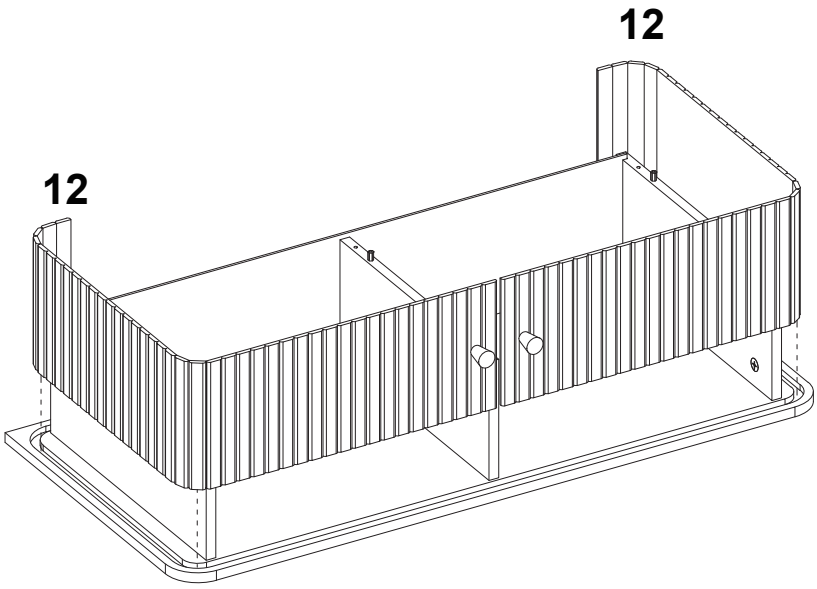

Make sure the sliding door is properly inserted into the groove to ensure smooth operation.

6

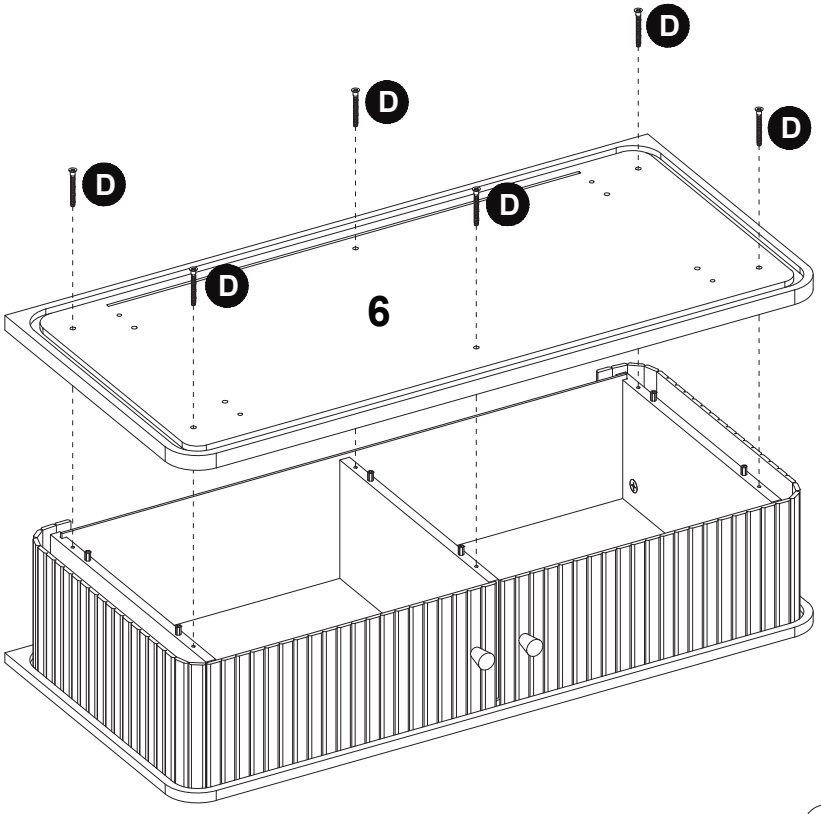

D x6

7

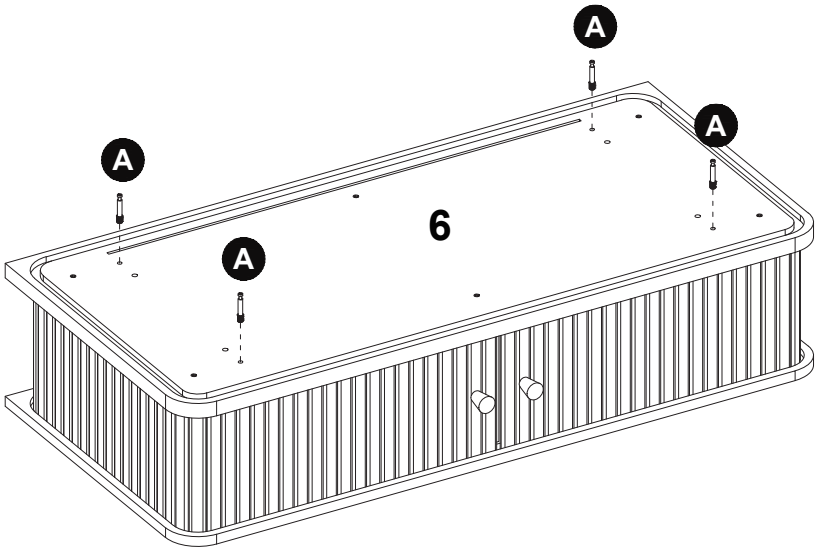

A x4

8

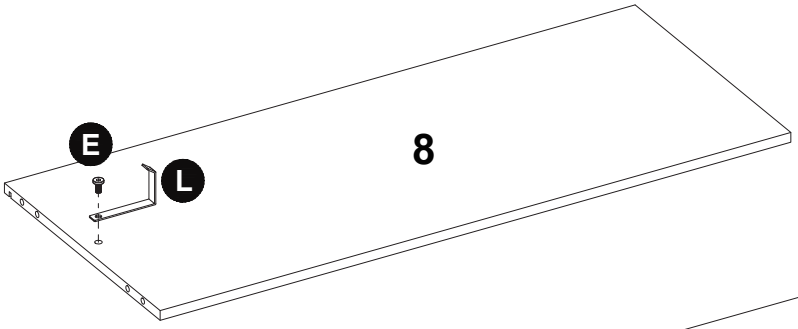

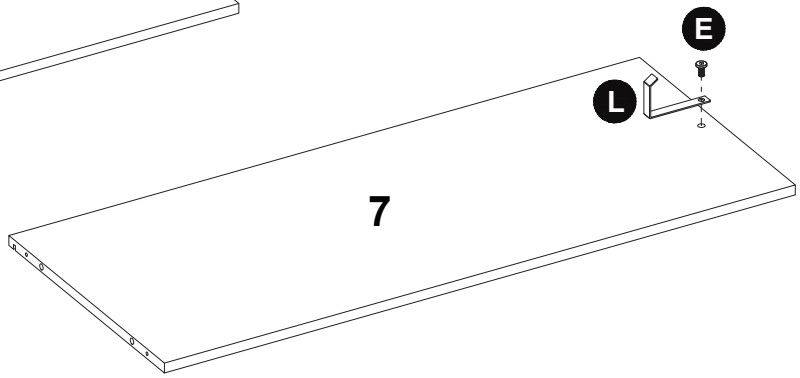

E x2 F x1 L x2

9

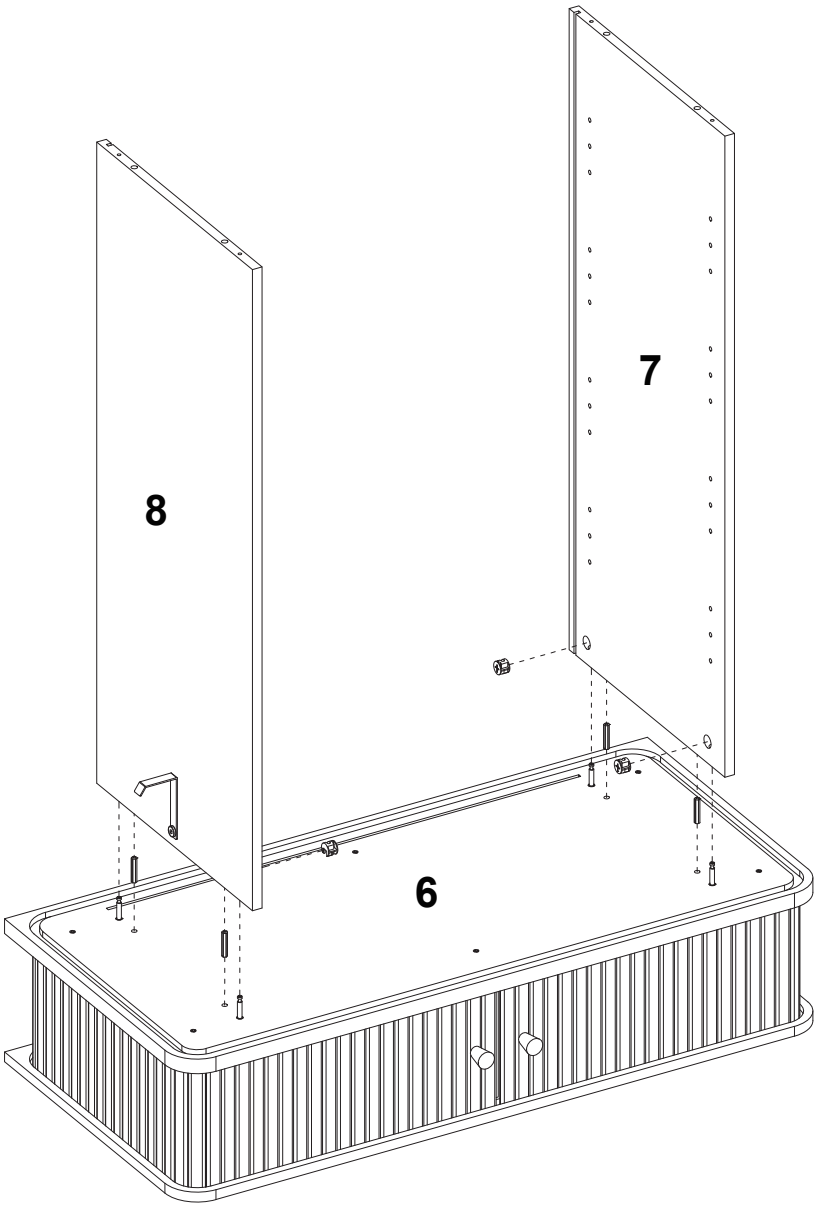

B x4

C x4

10

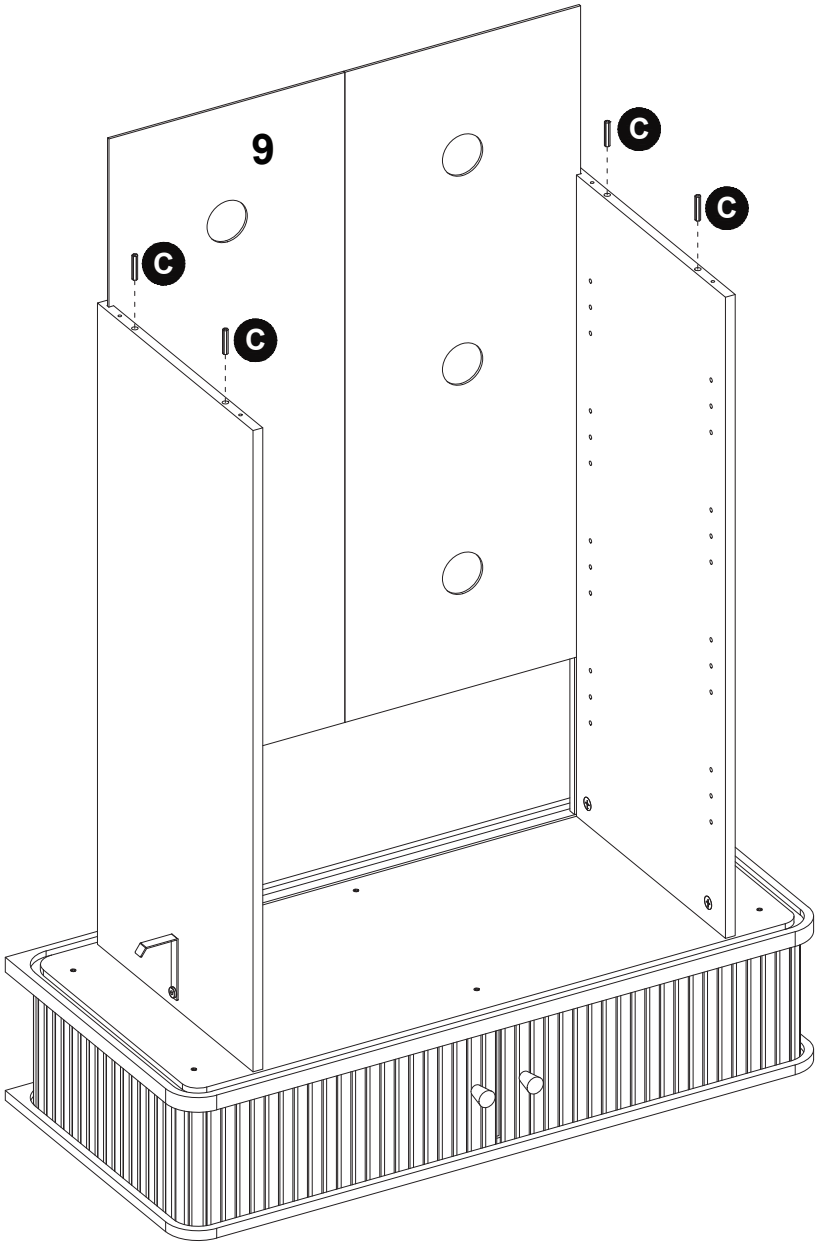

C x4

11

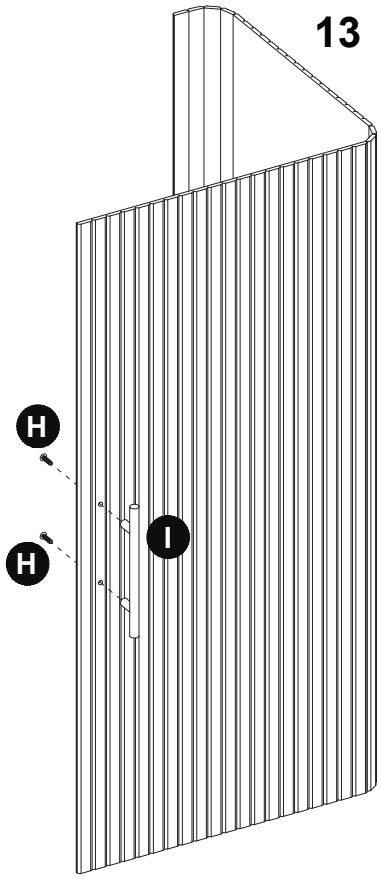

x2

H x2

I x4

12

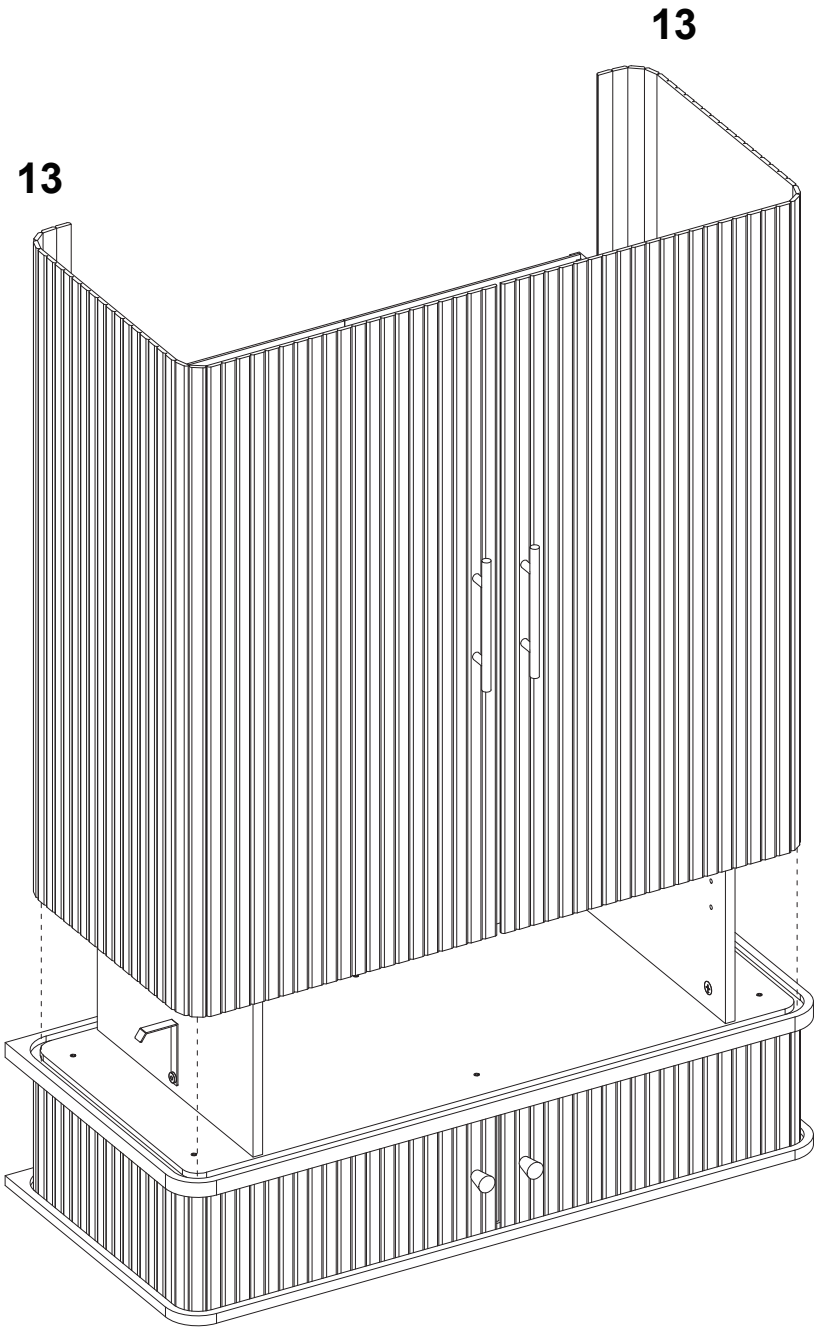

Make sure the sliding door is properly inserted into the groove to ensure smooth operation.

13

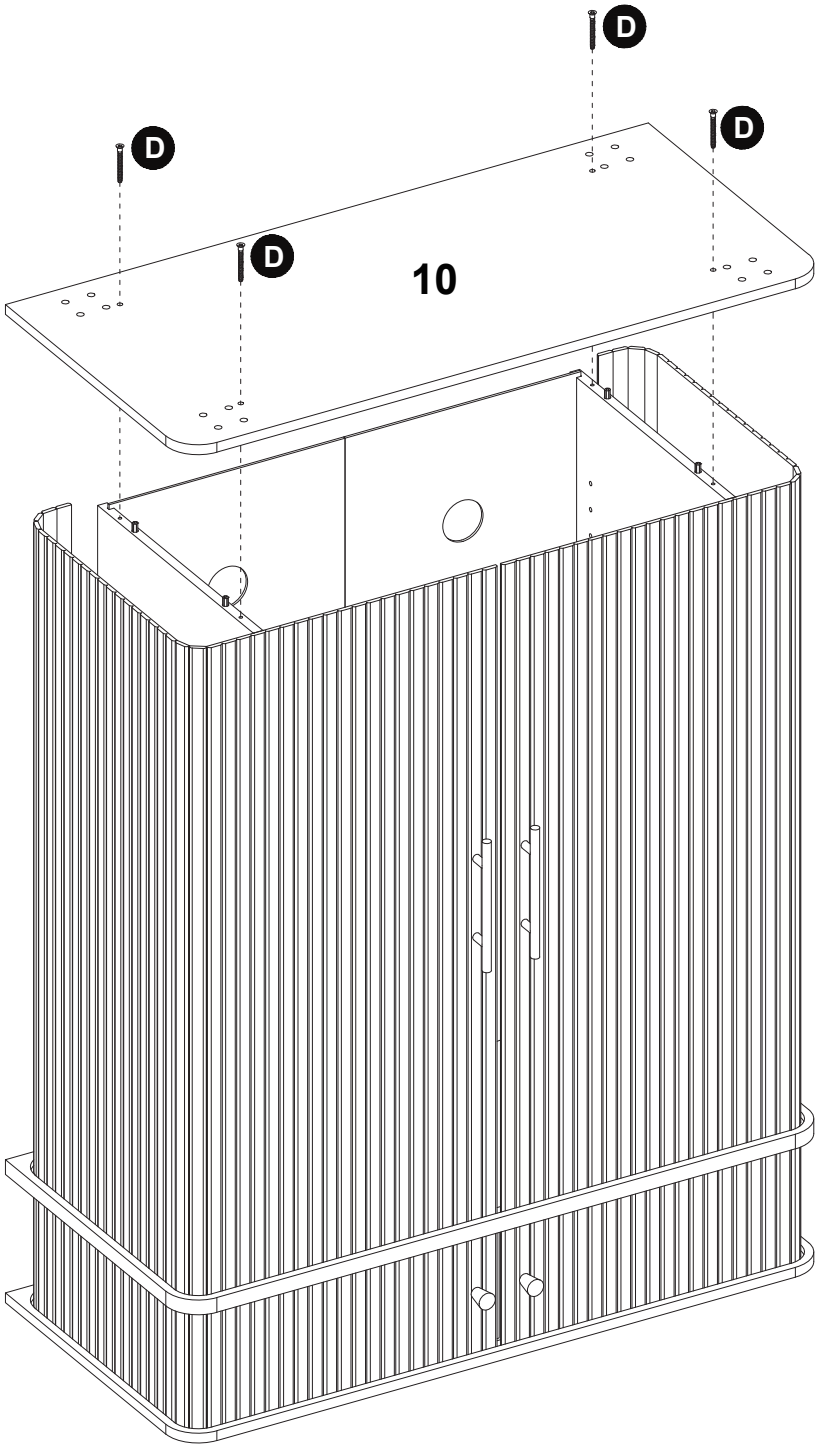

D x4

14

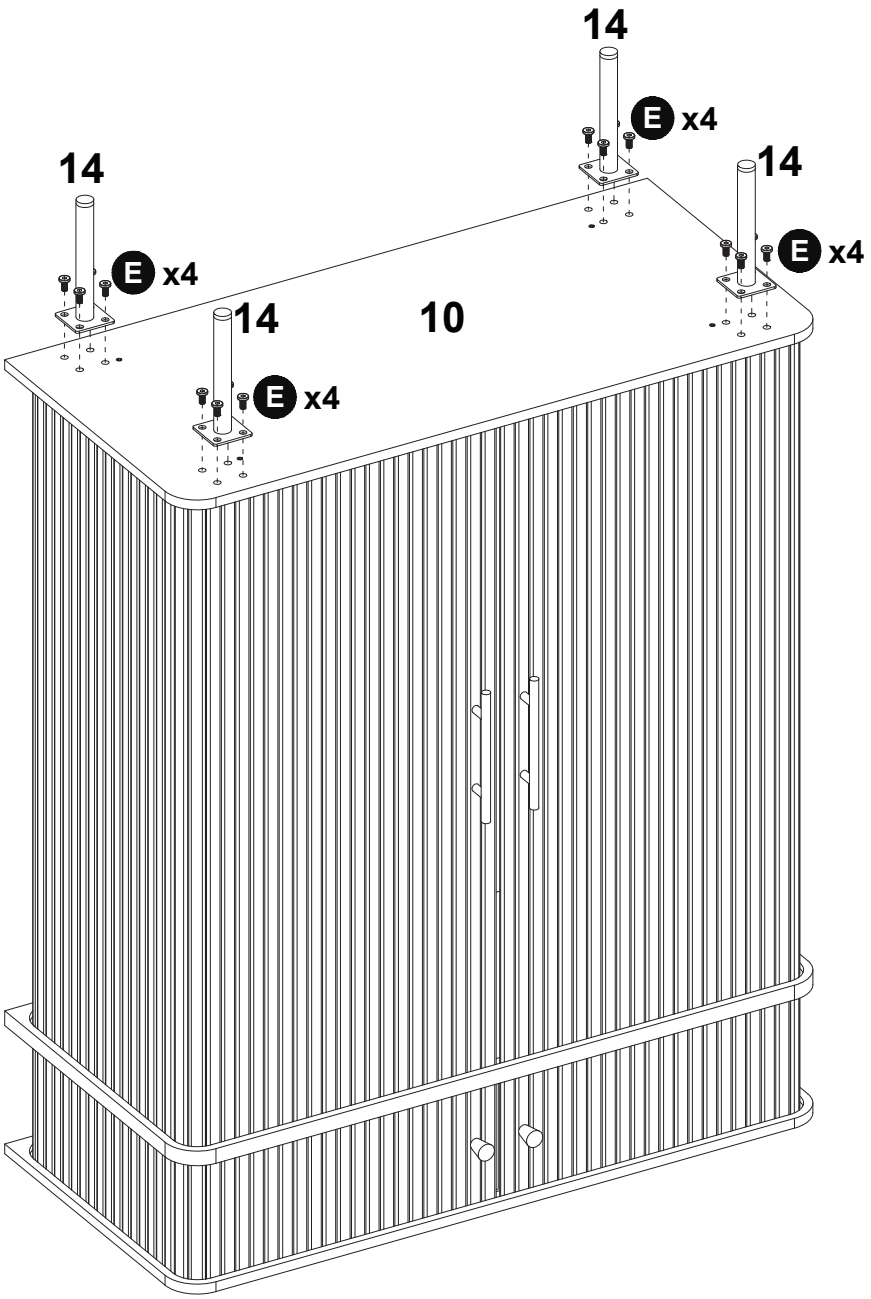

E x16

F x1

14

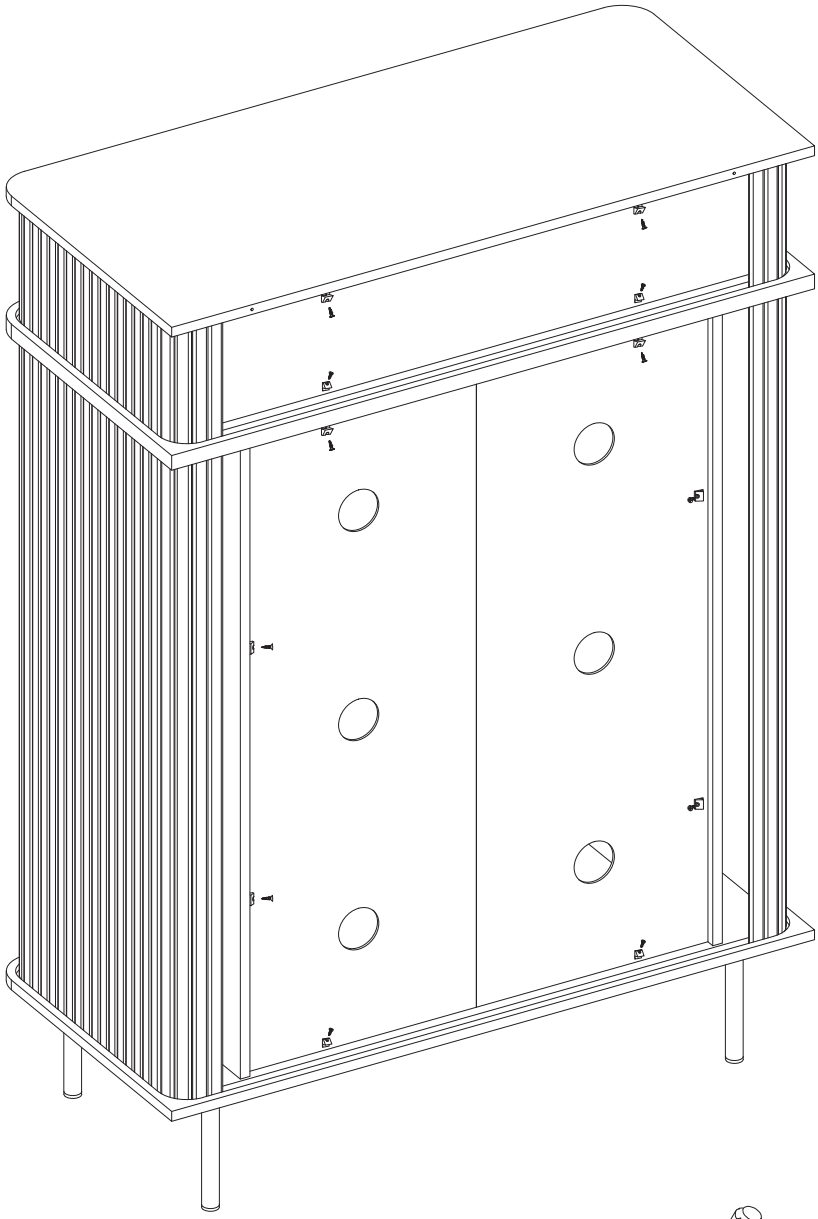

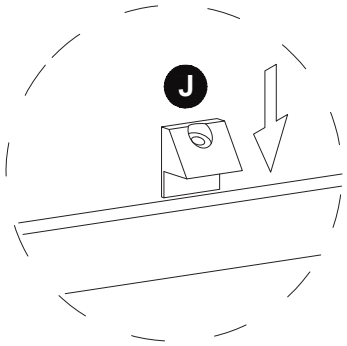

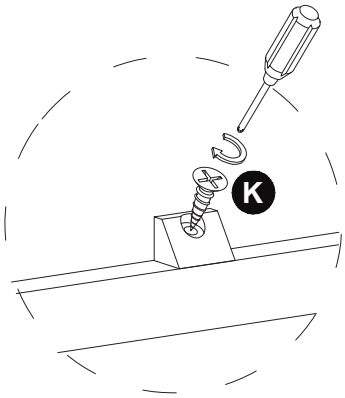

J x12

K x12

14

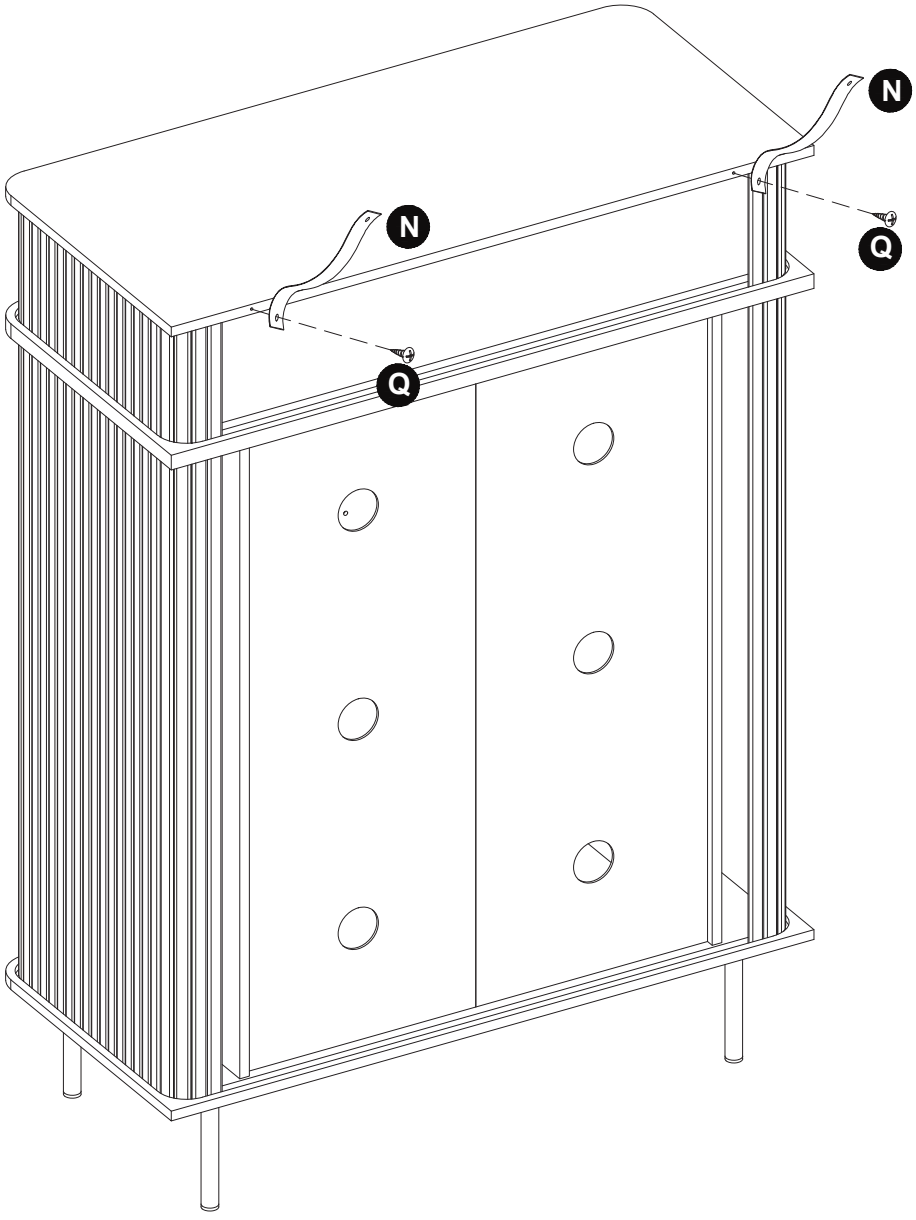

N x2

Q x2

15

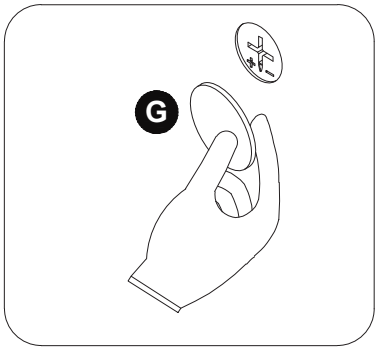

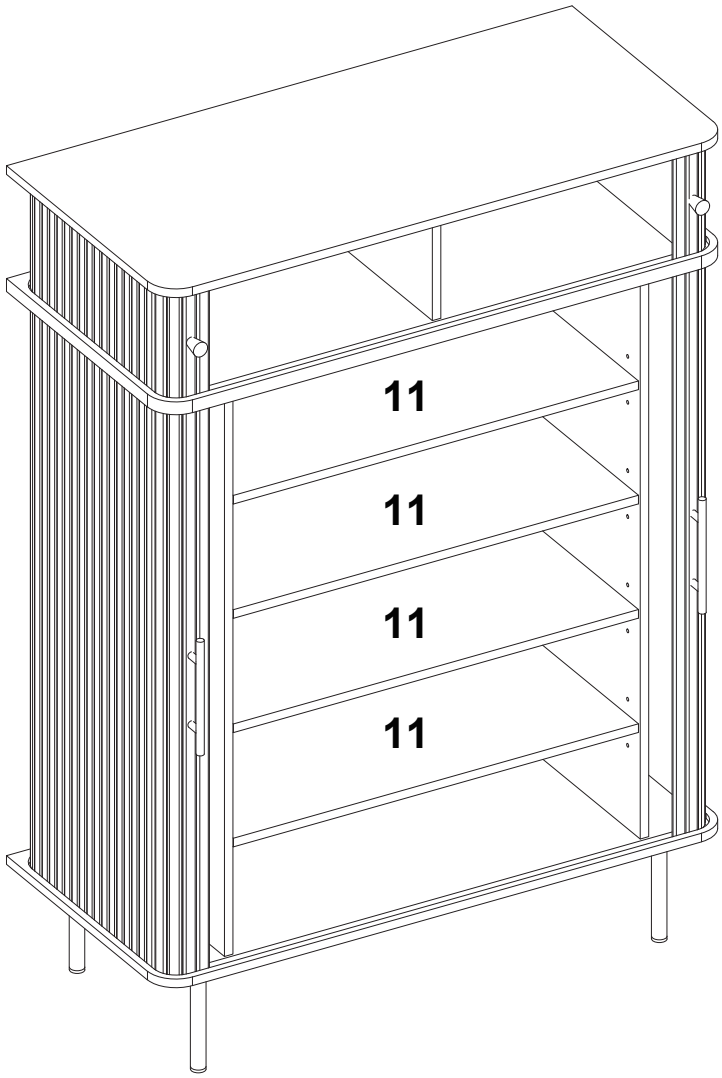

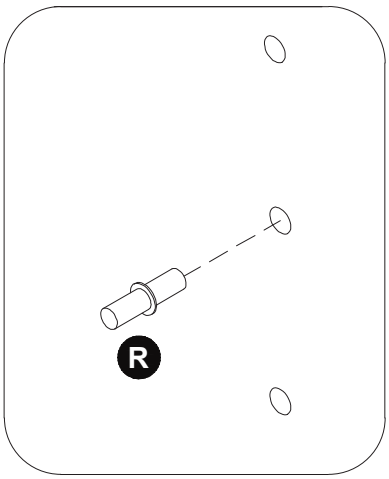

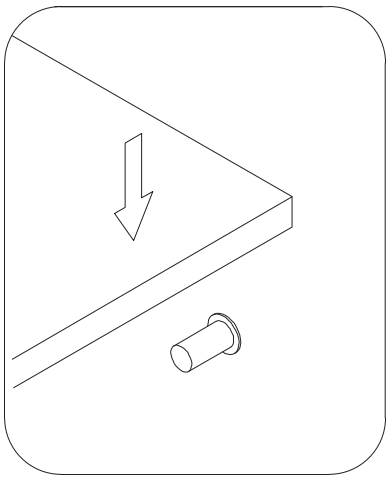

G x10

R x16

16

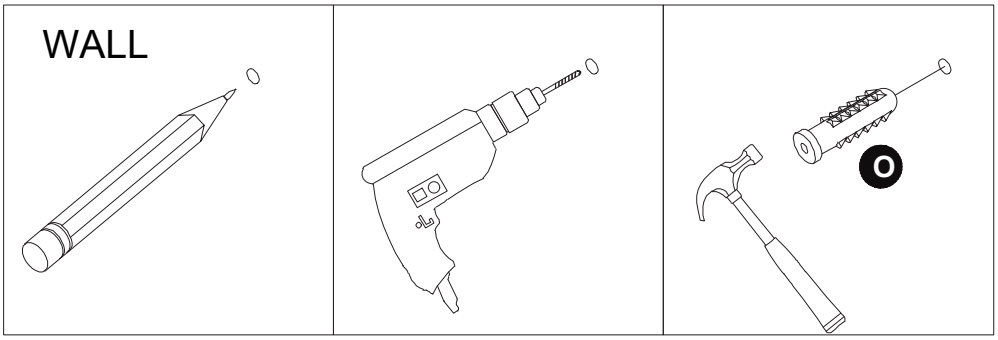

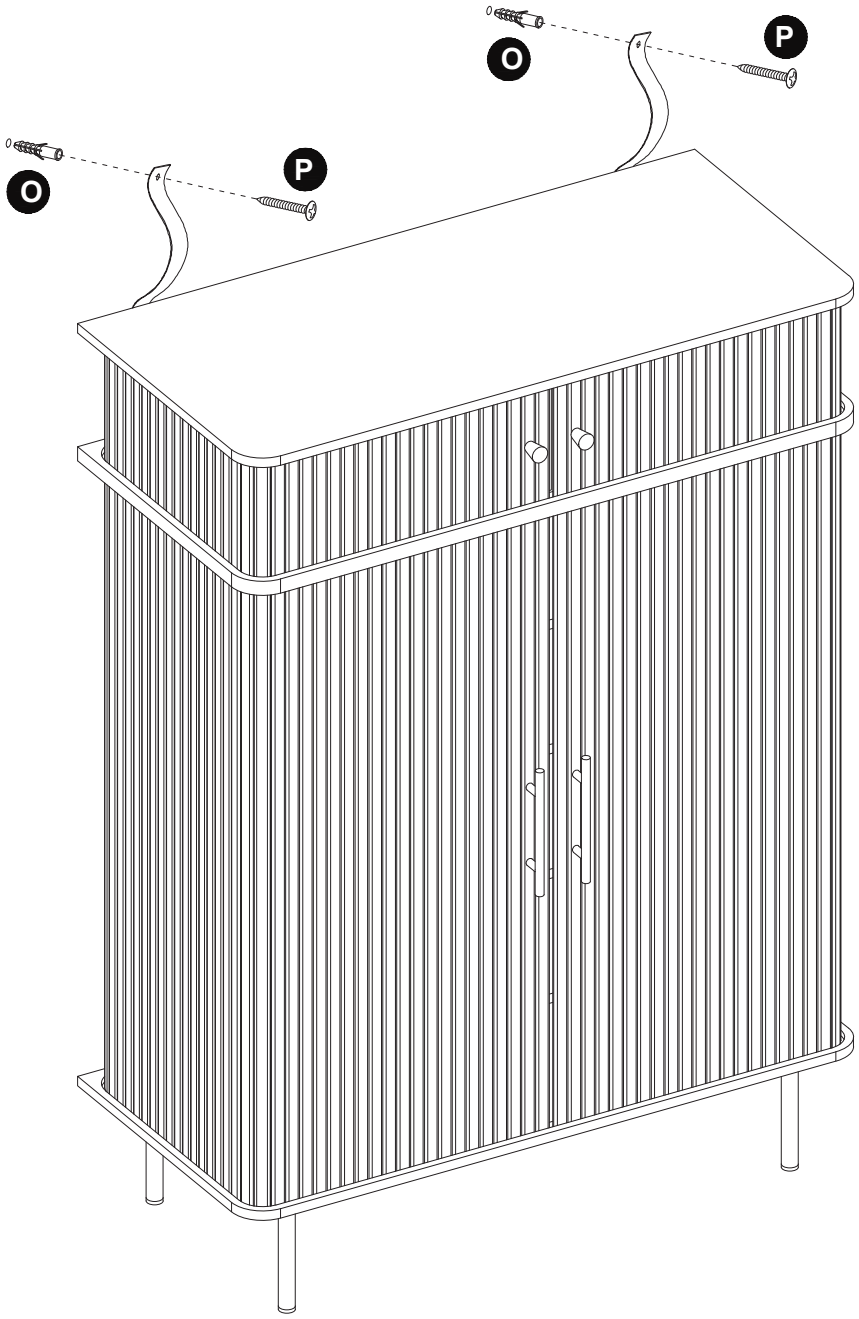

O x2 P x2

17

