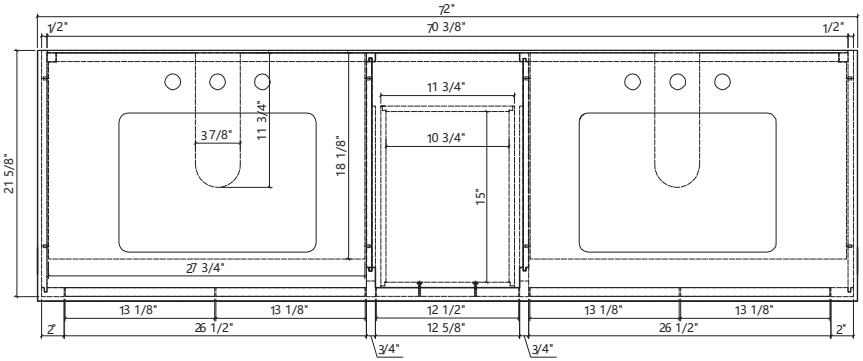
72"
1/2"
70 3/8"
1/2"
21 5/8"
3 7/8"
11 3/4"
18 1/8"
11 3/4"
10 3/4"
15"
27 3/4"
13 1/8"
13 1/8"
12 1/2"
13 1/8"
13 1/8"
2"
26 1/2"
12 5/8"
26 1/2"
2"
3/4"
3/4"

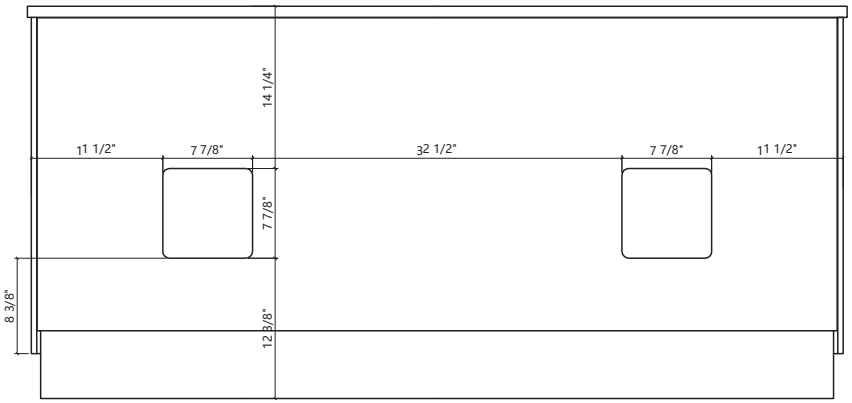
14 1/4"
11 1/2"
7 7/8"
32 1/2"
7 7/8"
11 1/2"
7 7/8"
8 3/8"
12 3/8"

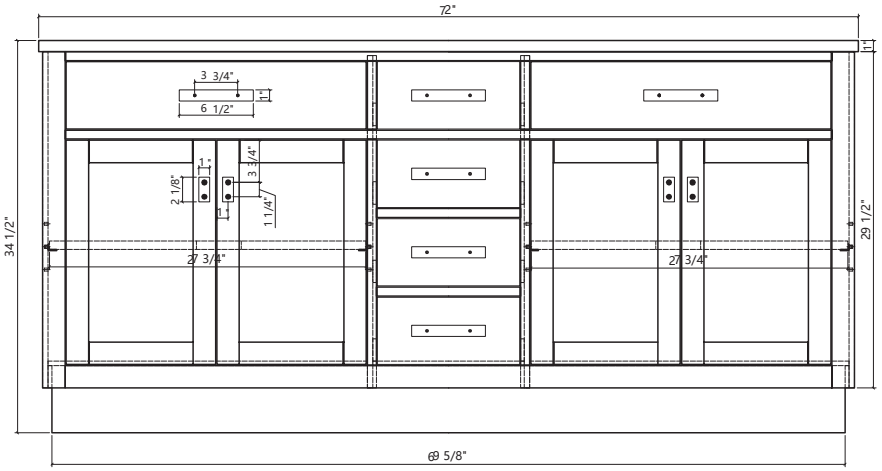
72"
1"
3 3/4"
1"
6 1/2"
1"
2 1/8"
3 3/4"
1 1/4"
34 1/2"
29 1/2"
27 3/4"
27 3/4"
69 5/8"

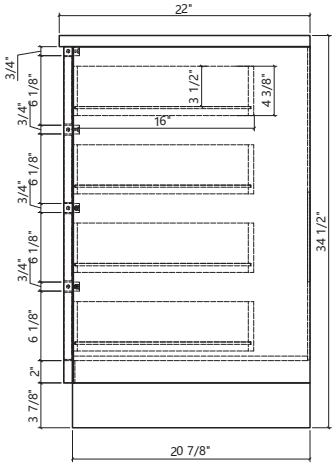
22"
3/4"
6 1/8"
3/4"
6 1/8"
3/4"
6 1/8"
3/4"
6 1/8"
2"
3 7/8"
3 1/2"
4 3/8"
16"
34 1/2"
20 7/8"

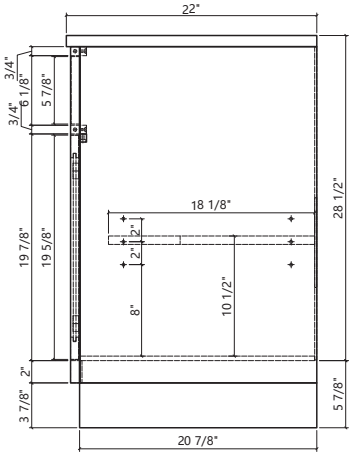
22"
3/4"
6 1/8"
3/4"
6 1/8"
5 7/8"
18 1/8"
2"
2"
19 7/8"
19 5/8"
8"
10 1/2"
28 1/2"
2"
3 7/8"
5 7/8"
20 7/8"

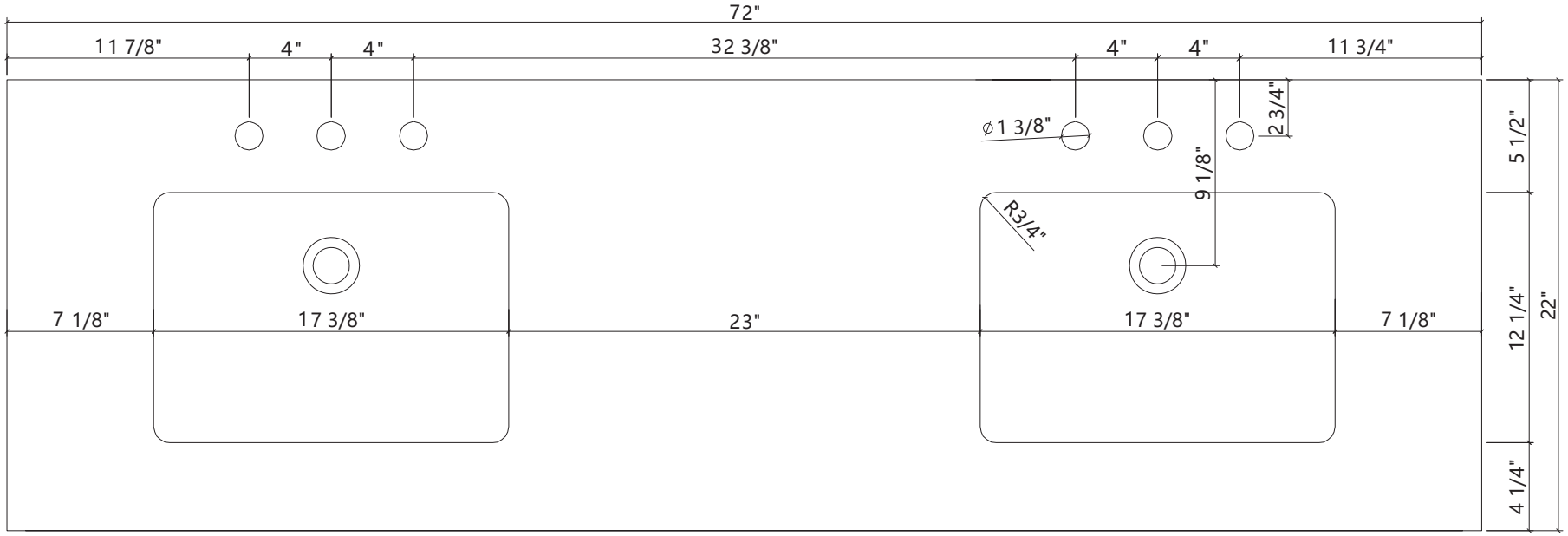
72"
11 7/8"
4"
4"
32 3/8"
4"
4"
11 3/4"
⌀1 3/8"
2 3/4"
9 1/8"
R3/4"
5 1/2"
12 1/4"
4 1/4"
22"
7 1/8"
17 3/8"
23"
17 3/8"
7 1/8"

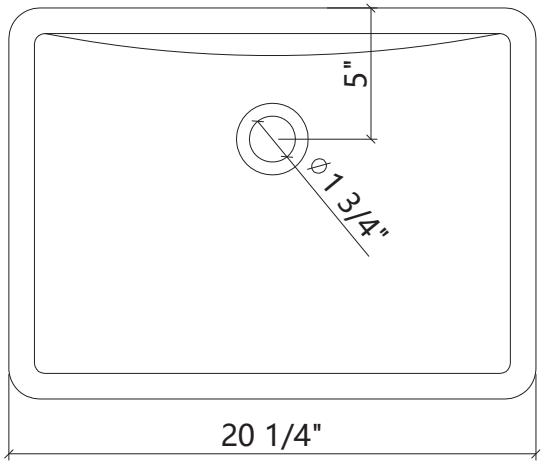
5"
⌀1 3/4"
20 1/4"

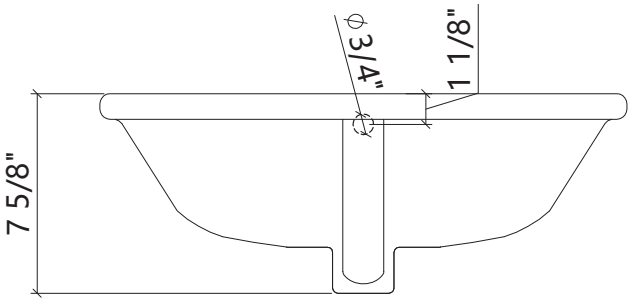
⌀3/4"
1 1/8"
7 5/8"

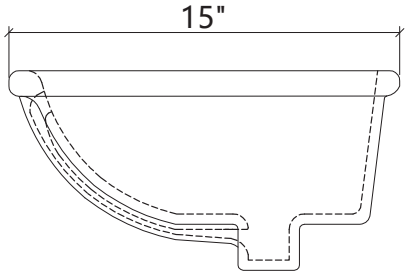
15"

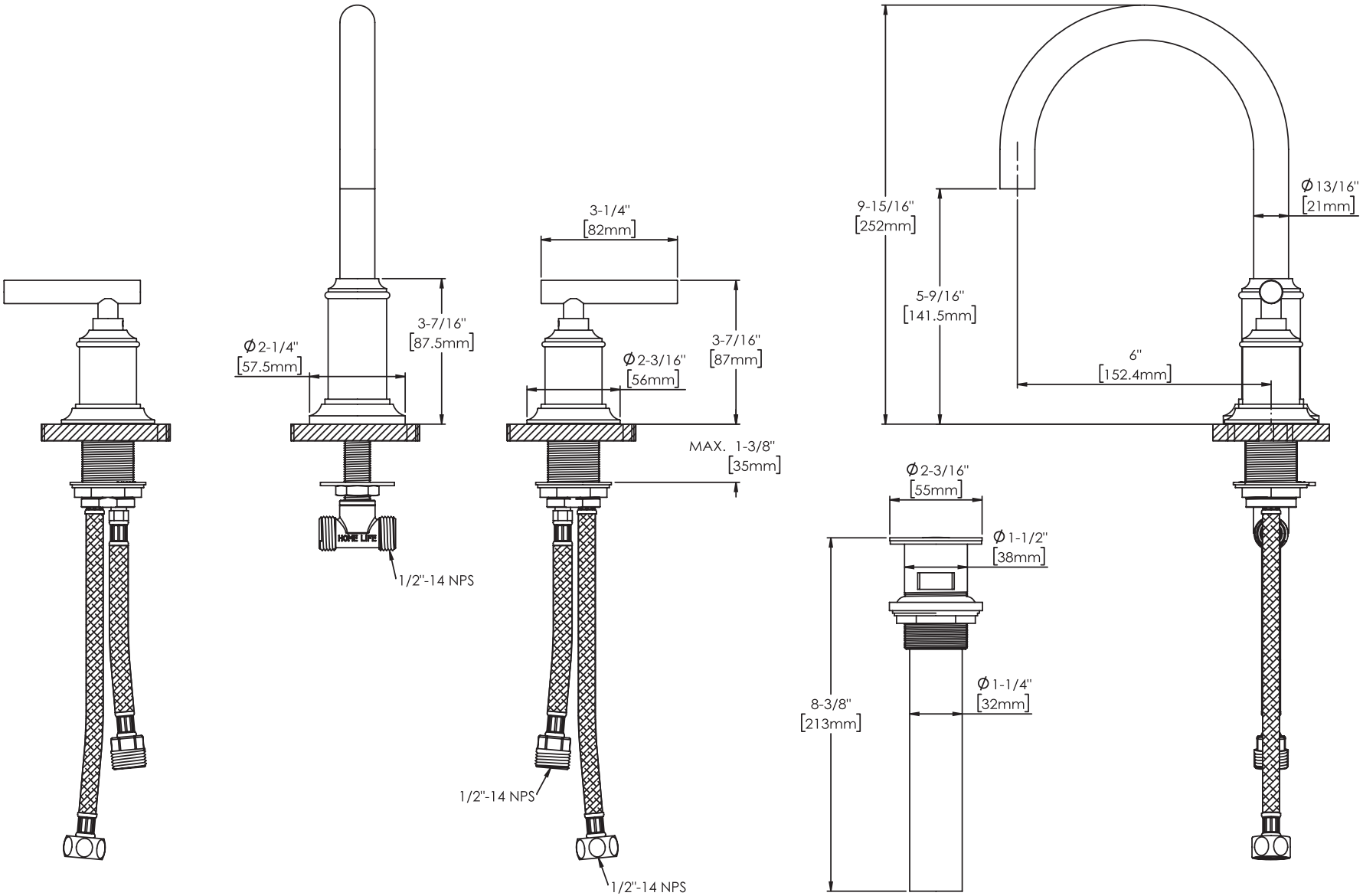
3-7/16"
[87.5mm]
Ø2-1/4"
[57.5mm]
HOME LIFE
1/2"-14 NPS
3-1/4"
[82mm]
3-7/16"
[87mm]
Ø2-3/16"
[56mm]
MAX. 1-3/8"
[35mm]
1/2"-14 NPS
1/2"-14 NPS
9-15/16"
[252mm]
5-9/16"
[141.5mm]
6"
[152.4mm]
Ø13/16"
[21mm]
Ø2-3/16"
[55mm]
Ø1-1/2"
[38mm]
Ø1-1/4"
[32mm]
8-3/8"
[213mm]

2024-12-19