I870100441A1

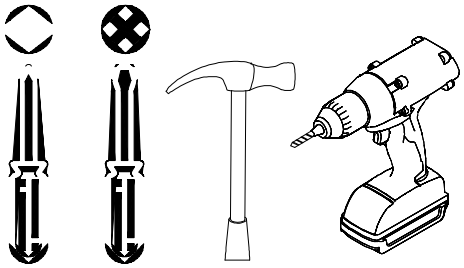

Tools required
(not included)

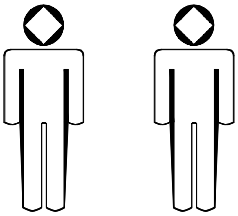

2 people for assembly

⚠ Safety and Care Advice

Important – Please read these instructions fully before starting assembly

• Check you have all the components and tools listed on the following pages.

• Remove all fittings from the plastic bags and separate them into their groups.

• Keep children and animals away from the work area, small parts could choke if swallowed.

• Make sure you have enough space to layout the parts before starting.

• During assembly do not stand or put weight on the product, this could cause damage.

• Assemble the item as close to its final position (in the same room) as possible.

• Assemble on a soft level surface to avoid damaging the unit or your floor.

• Parts of the assembly will be easier with 2 people.

• To reduce the likelihood of damaging your product please ensure that your power drill is set on a low torque setting.

Care and maintenance

• Only clean using a damp cloth and mild detergent, do no use bleach or abrasive cleaners.

• From time to time check that there are no loose screws on this unit.

• This product should not be discarded with household waste. Take to your local authority waste disposal centre.

Handy Hints

• Assemble all parts and bolts loosely during assembly, only once the product is complete should you fully tighten the bolts

• Regularly check and ensure That all bolts and fittings are tightend properly.

⚠ WARNING

Children have died fromfurniture tipover.
To reduce therisk of furniture tipover:
-ALWAYS install Anti-tip deviceprovided.
-NEVER ut a TV on this product.
-NEVER allow children to standclimb or hang on any drawers,doors, or shelves.
-NEVER open more than onedrawer at a time.
-Place heaviest items in thelowest drawers.
This is a permanentlabel.
Do notremove!

PACKAGE INCLUDE

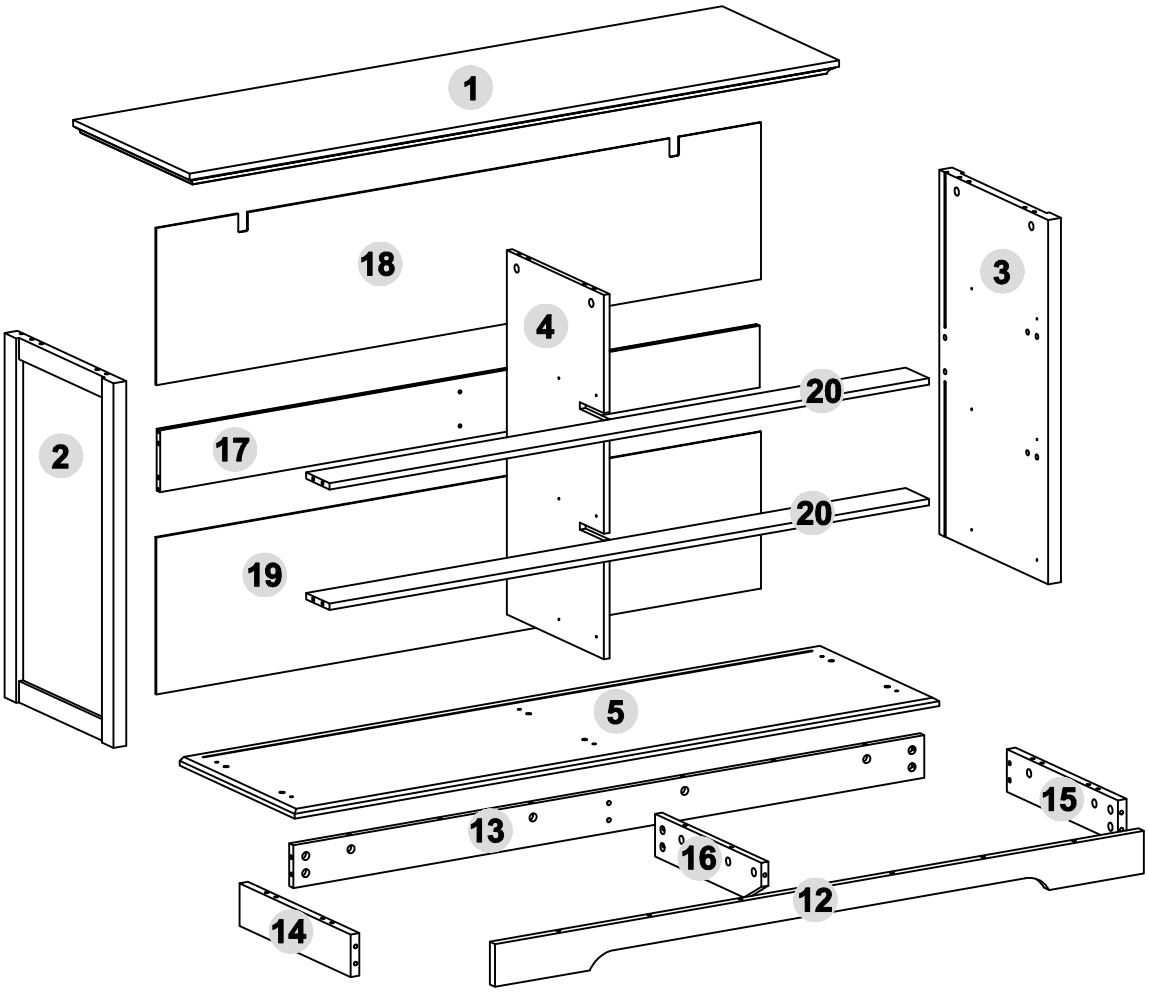

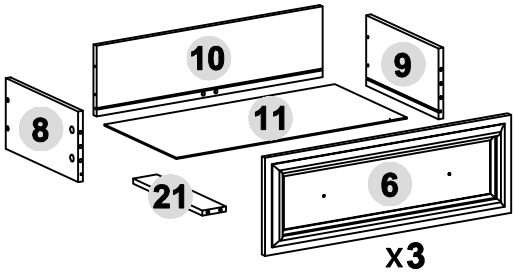

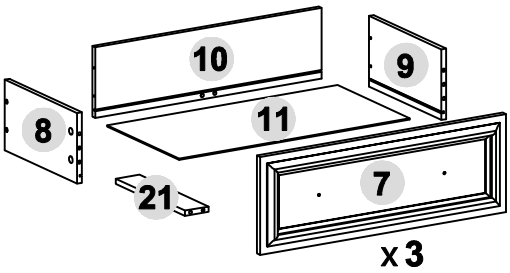

PART IDENTICATION

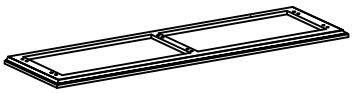 1 1x	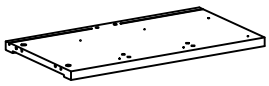 2 1x	3 1x	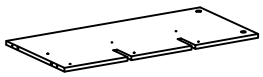 4 1x
5 1x	6 3x	7 3x	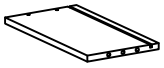 8 6x
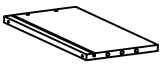 9 6x	10 6x	11 6x	12 1x
13 1x	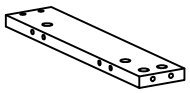 14 1x	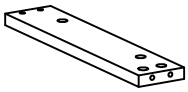 15 1x	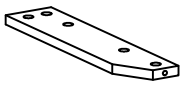 16 1x
17 1x	18 1x	19 1x	20 2x
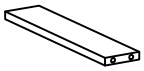 21 6x			

PACKAGE CONTENT

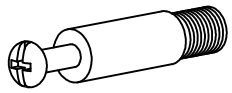 A 79x+3	Ø15x9MM B 79x+3	Ø6x30MM 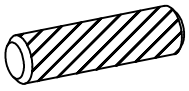 C 44x+2	Ø3x12MM D 72x+3
Ø3.5x35MM E 26x+2	Ø3x14MM F 16x+2	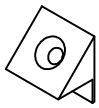 G 16x+2	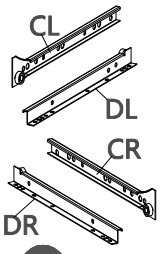 12" 6x 12" 6x H
I 12x	M4x8MM J 12x+1	Ø5x48MM 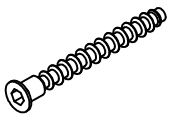 K 6x+1	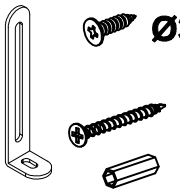 Ø3.5 x12mm L 2x
3# M 1x	Ø12 N 8x+1	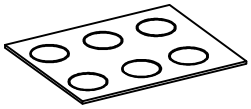 O 24x+2	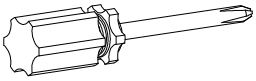

STEP 1

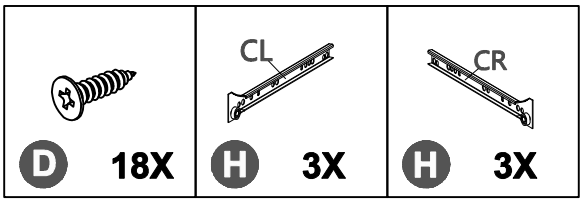

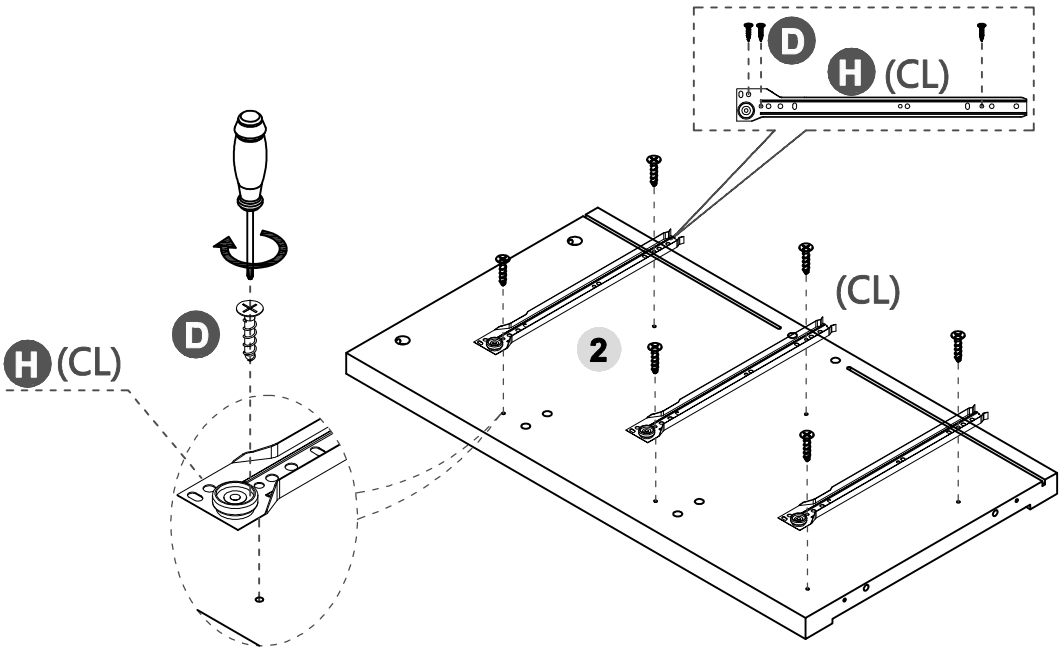

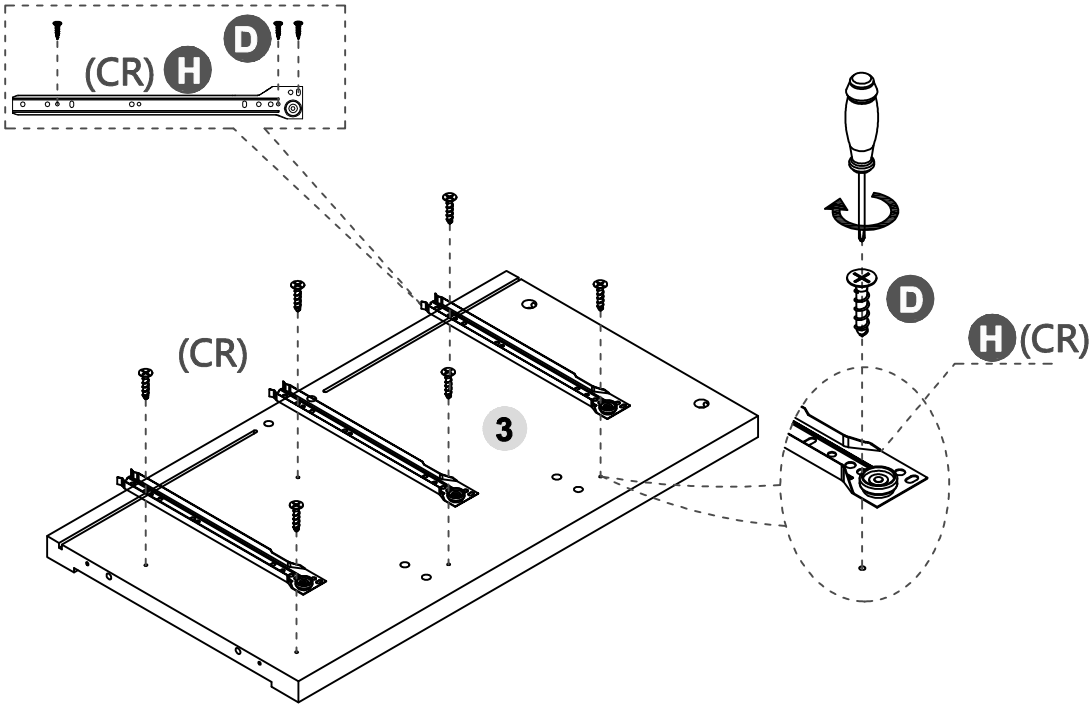

STEP 2

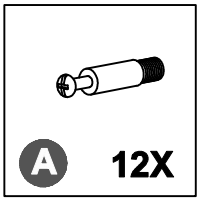

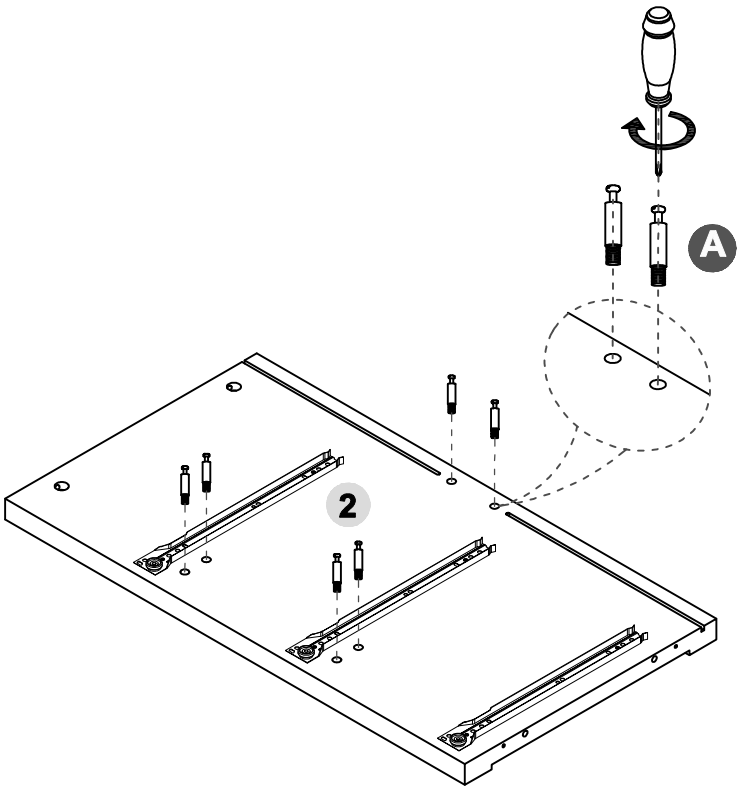

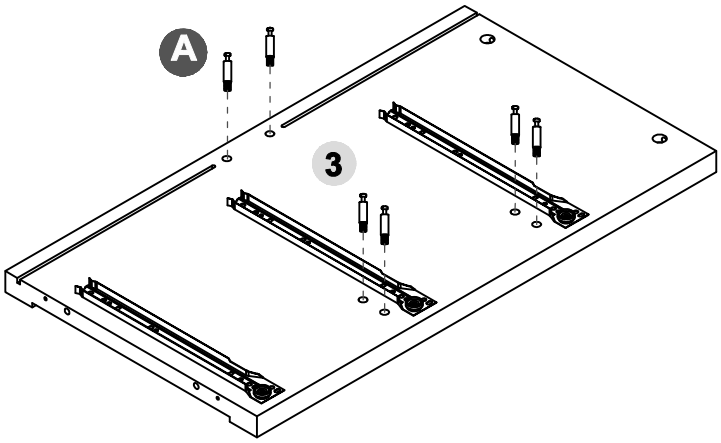

STEP 3

D 18X	H 3X	H 3X

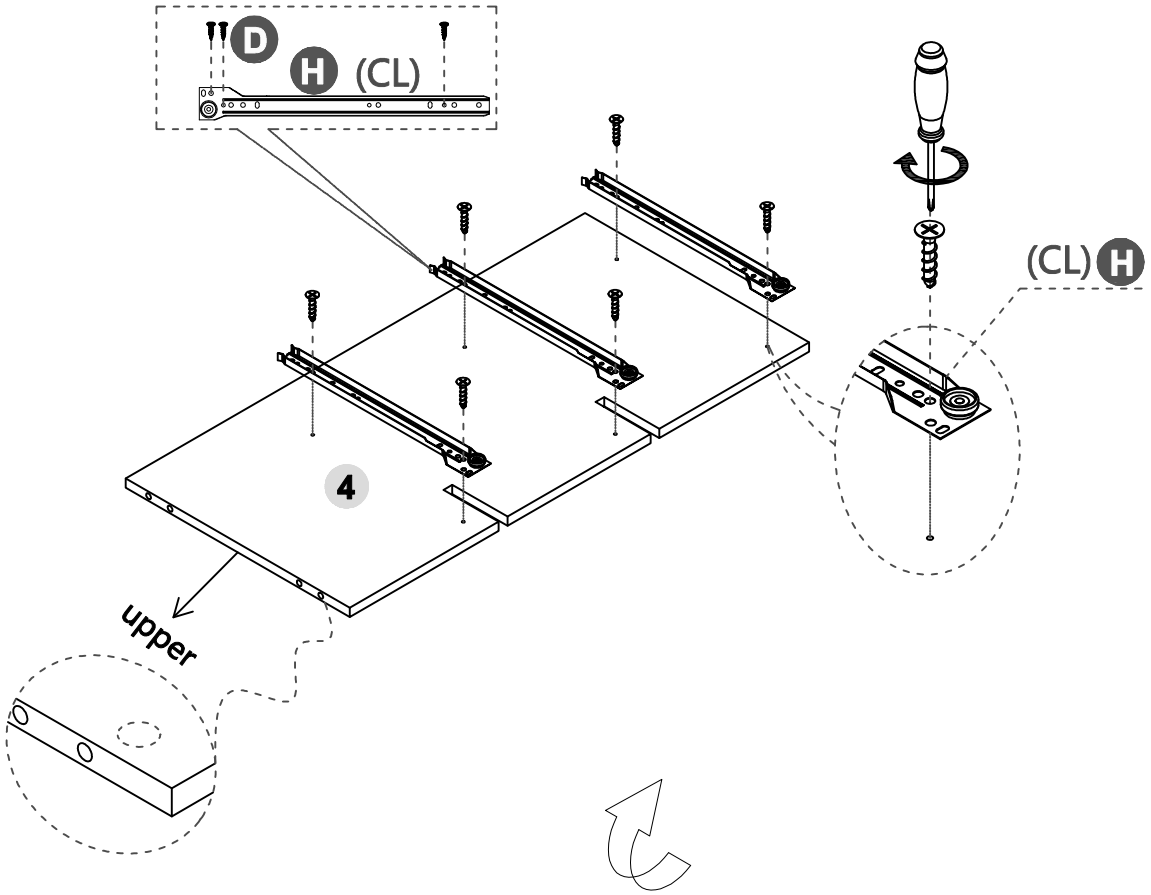

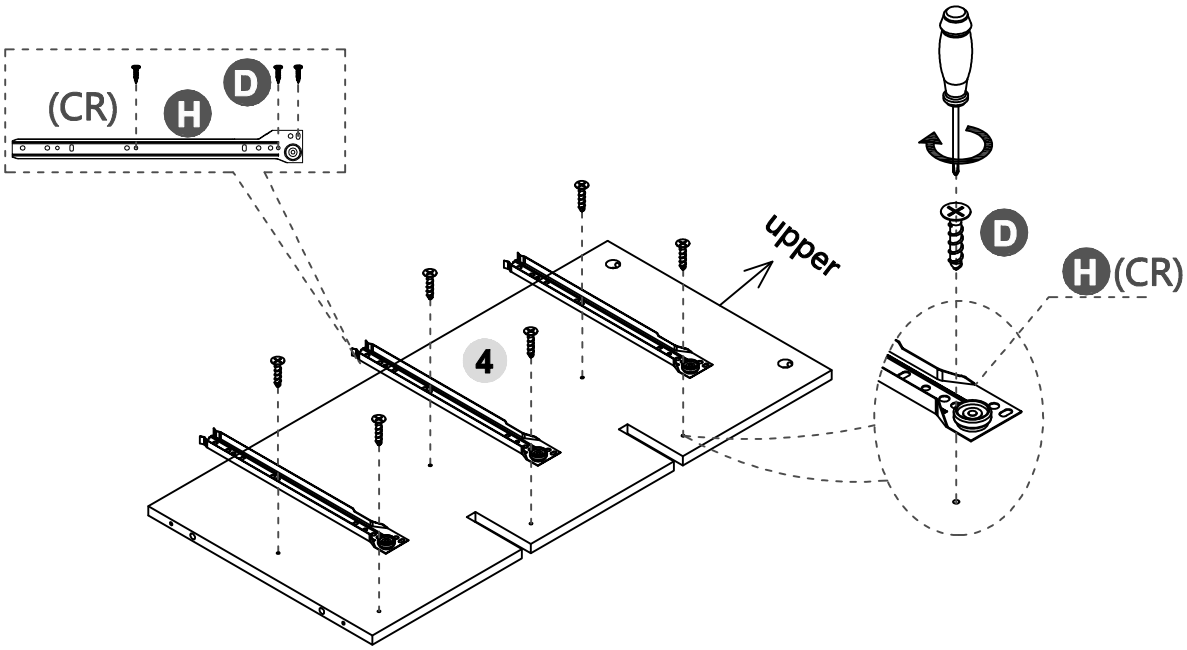

STEP 4

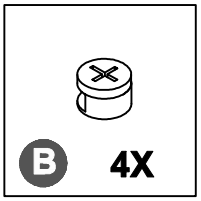

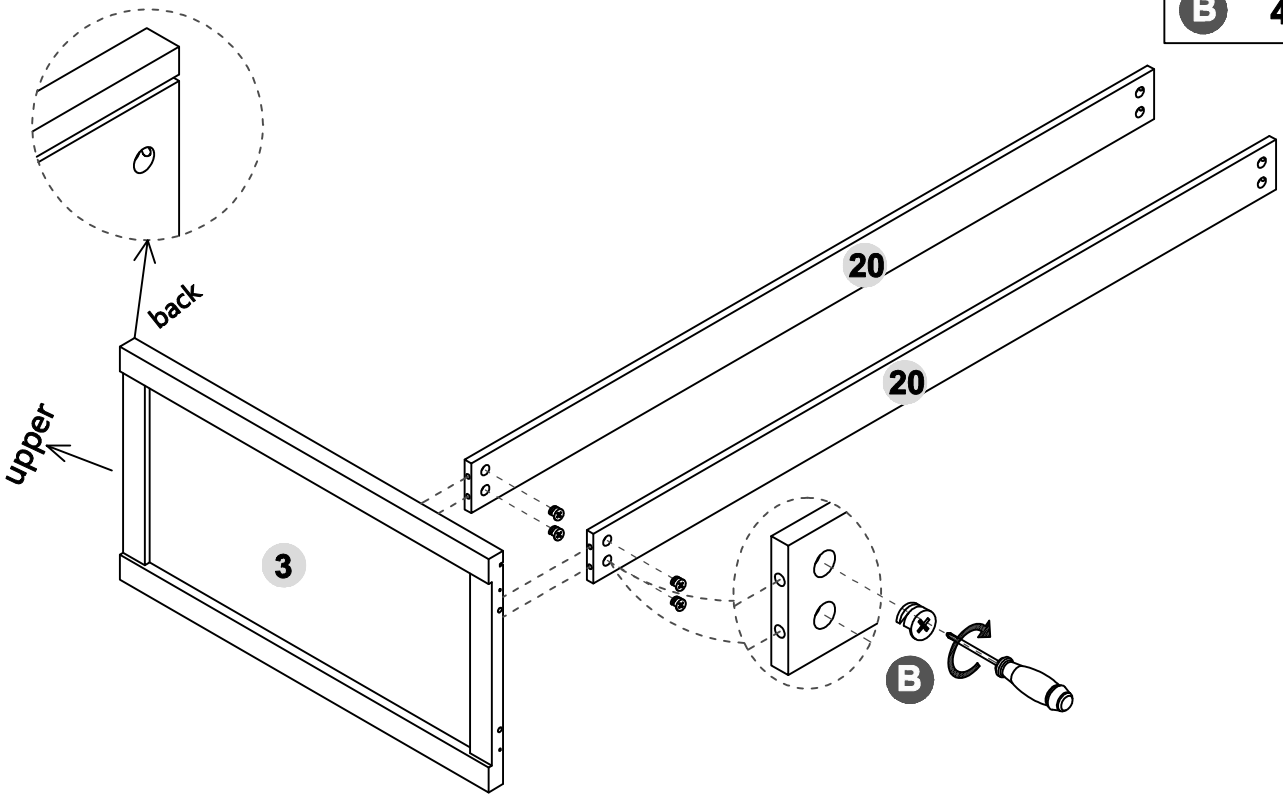

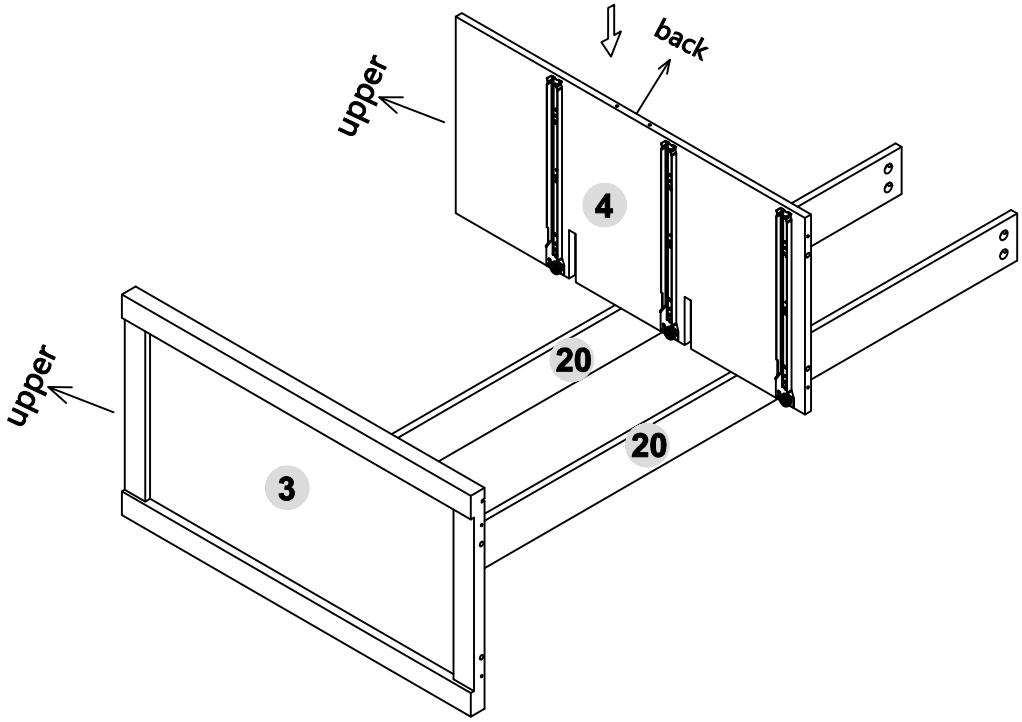

STEP 5

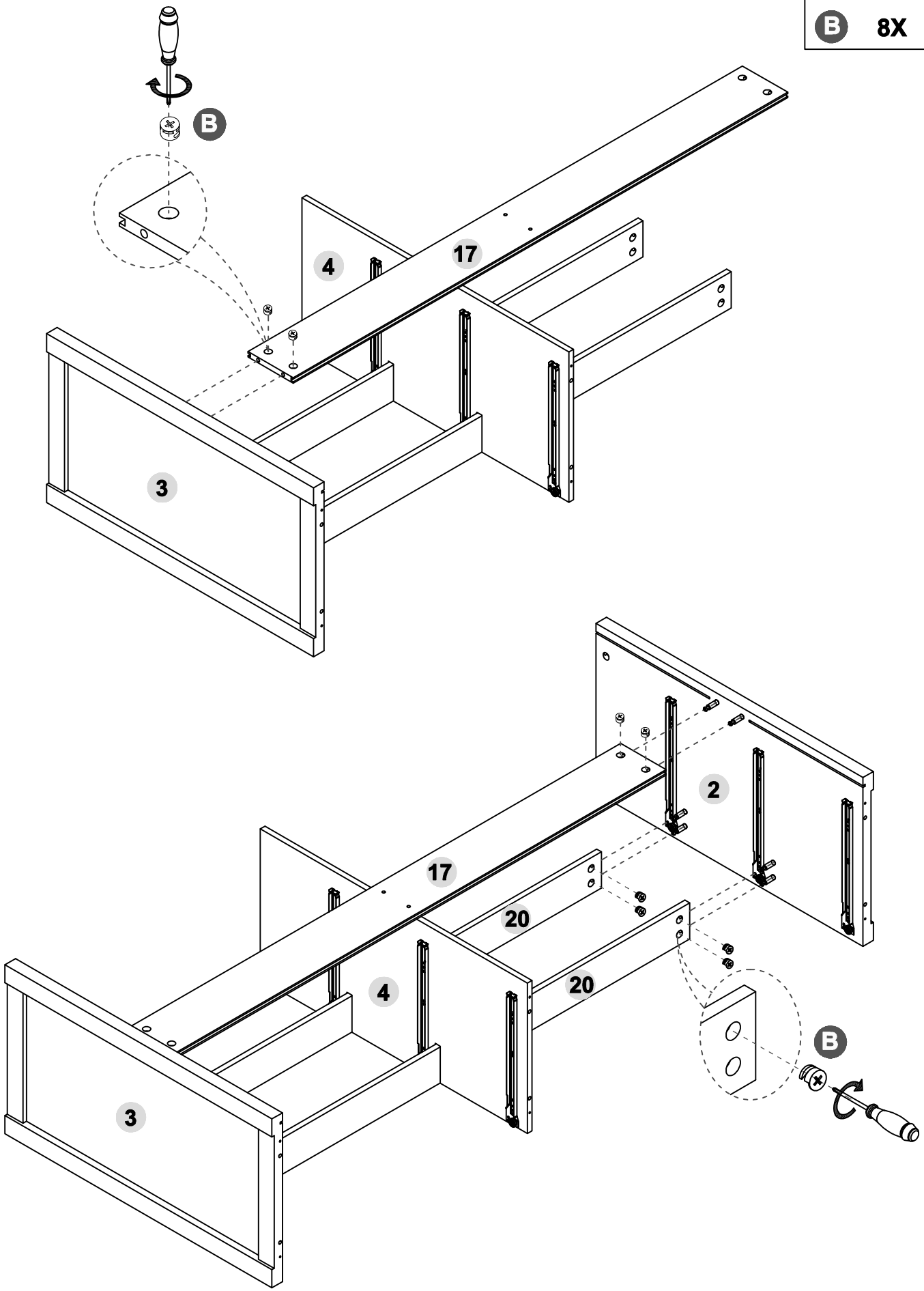

STEP 6

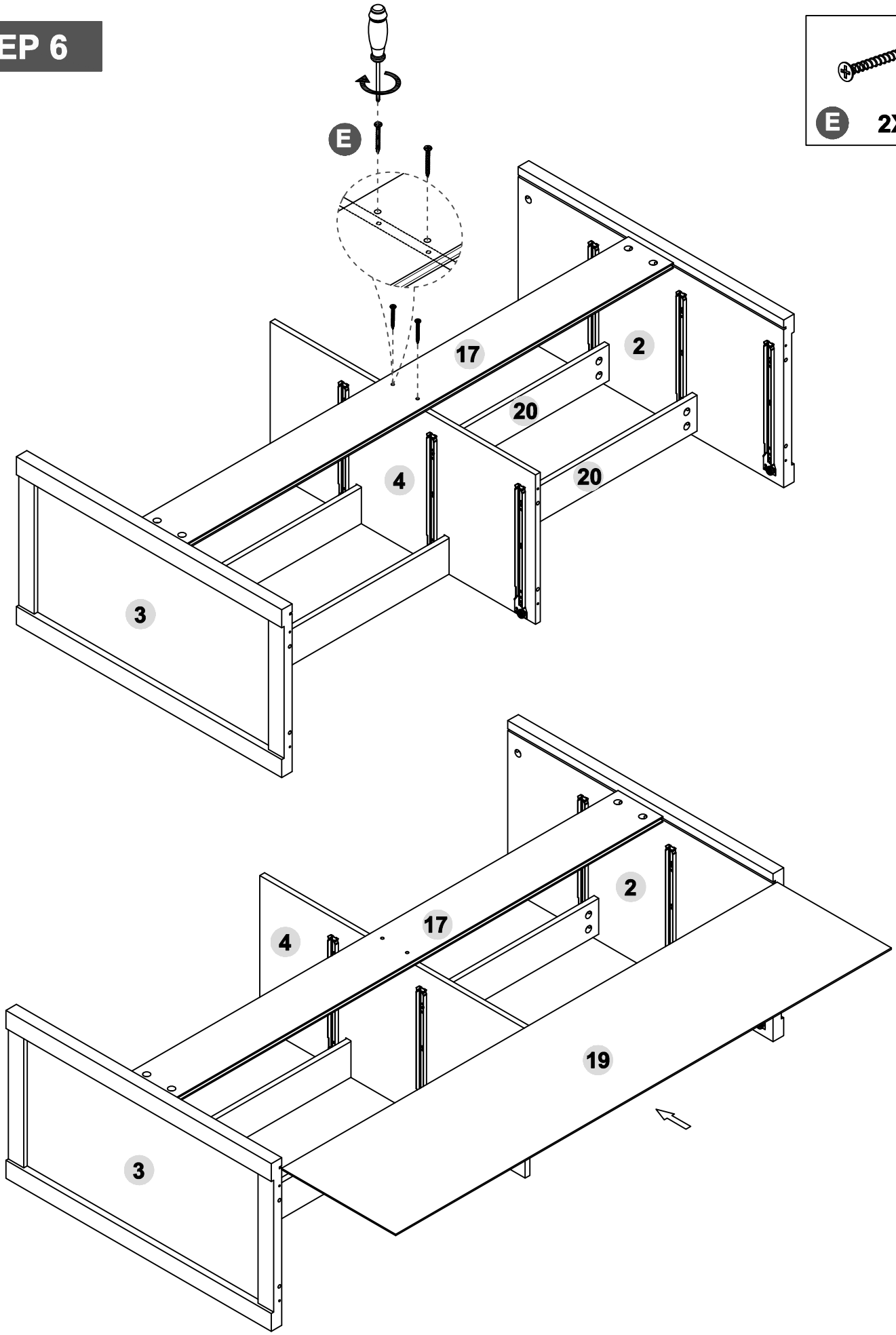

STEP 7

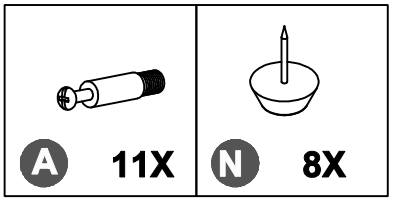

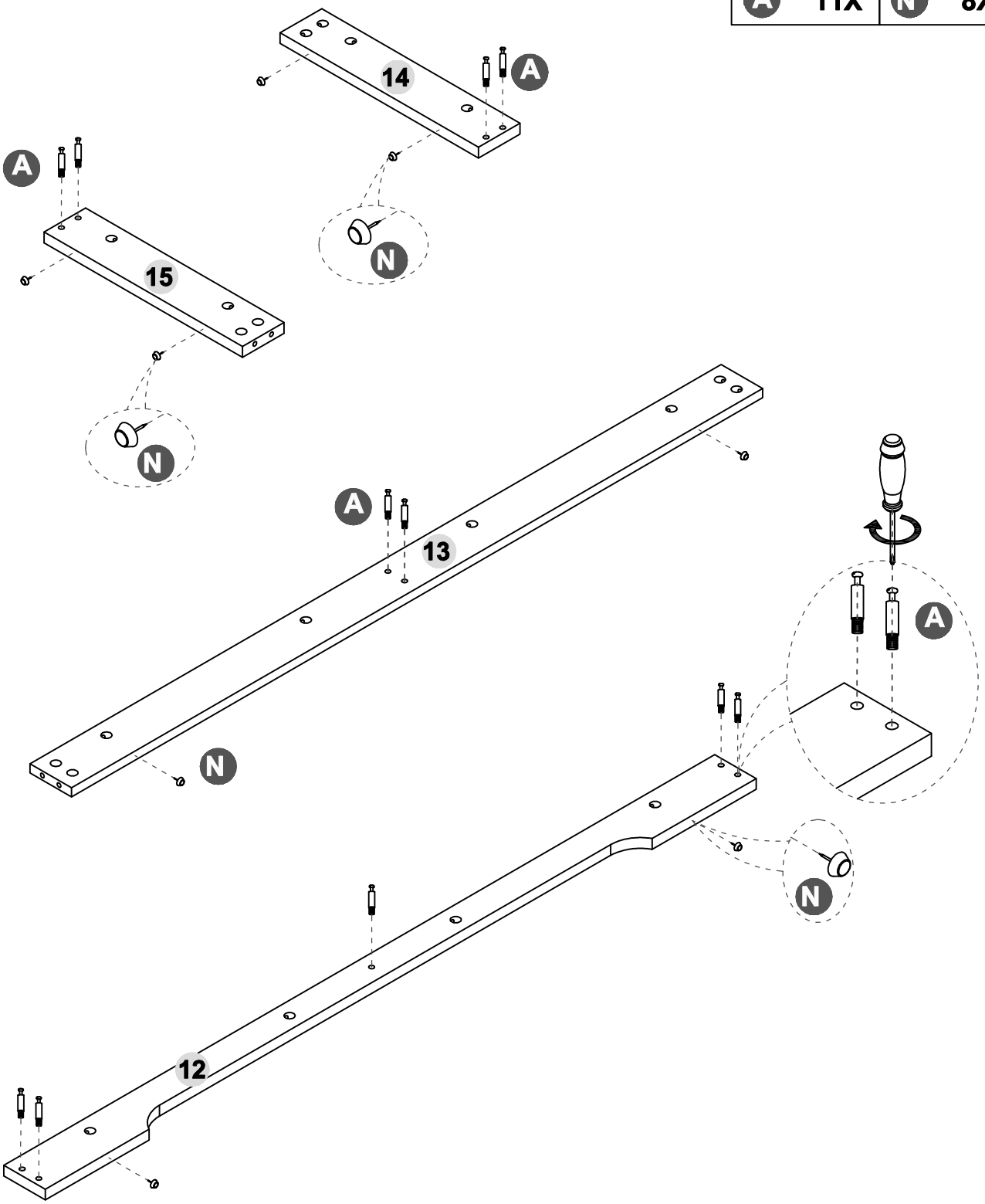

STEP 8

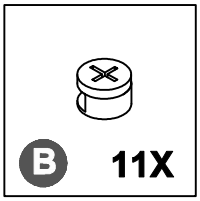

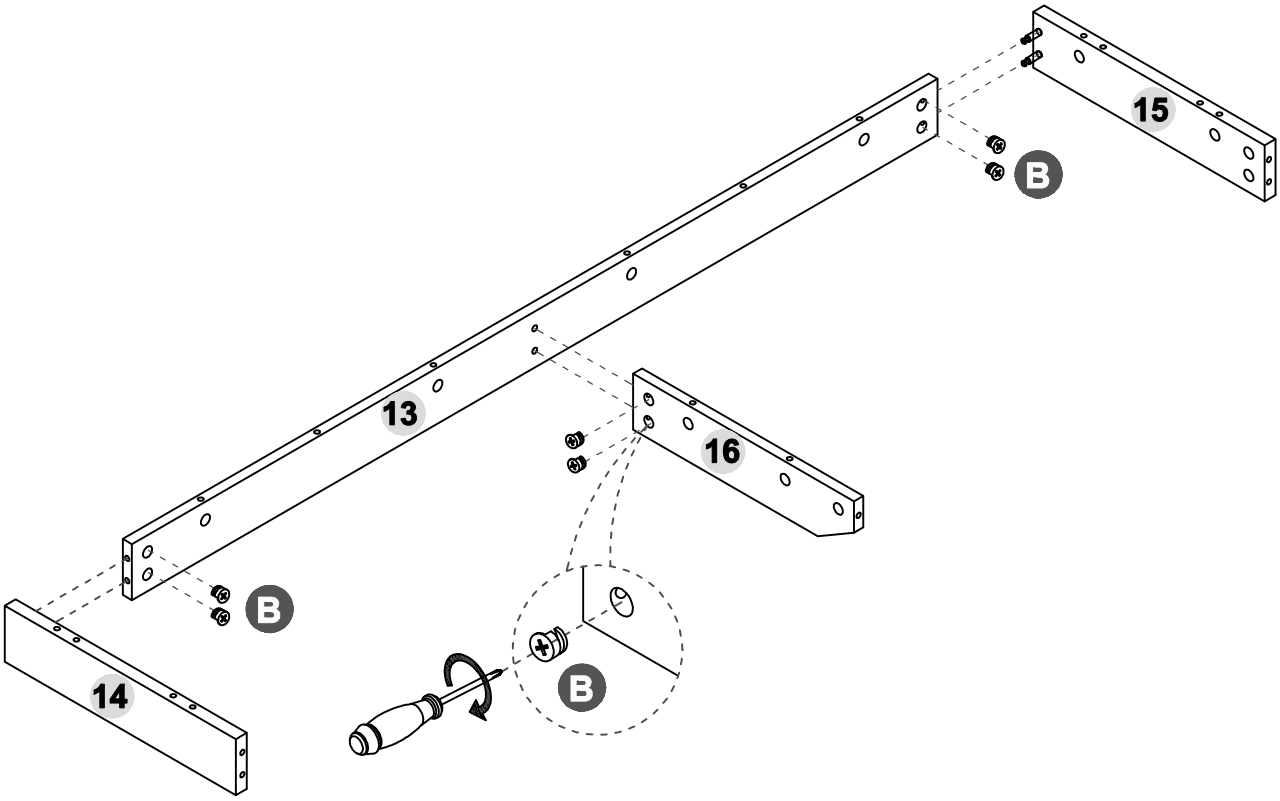

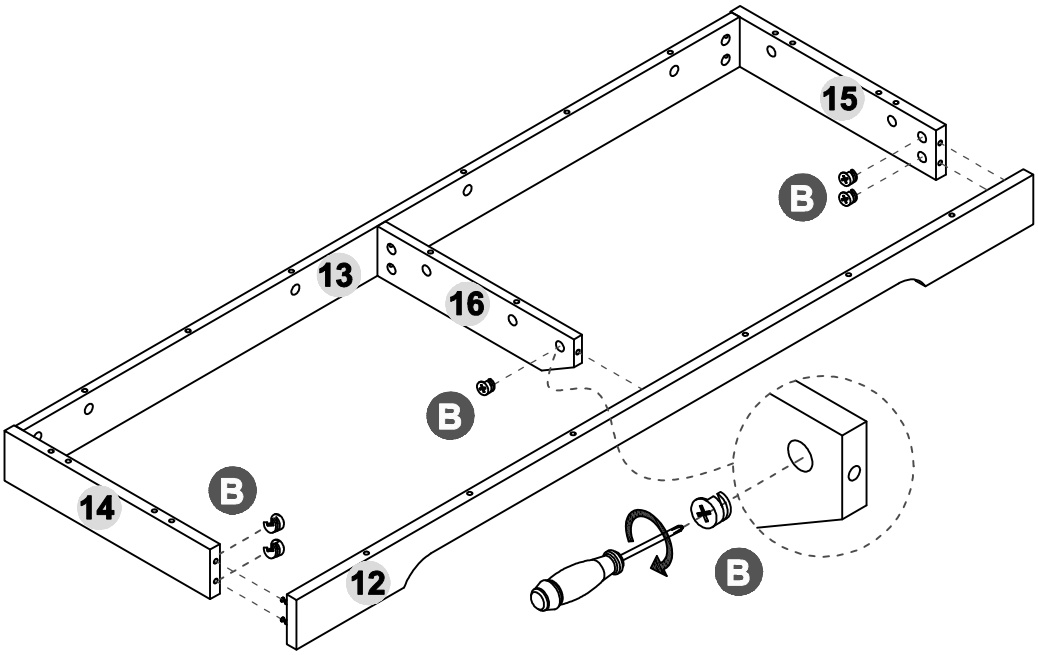

STEP 9

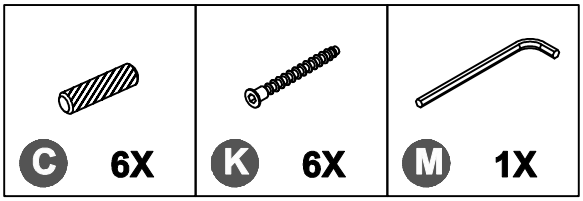
C 6X
K 6X
M 1X

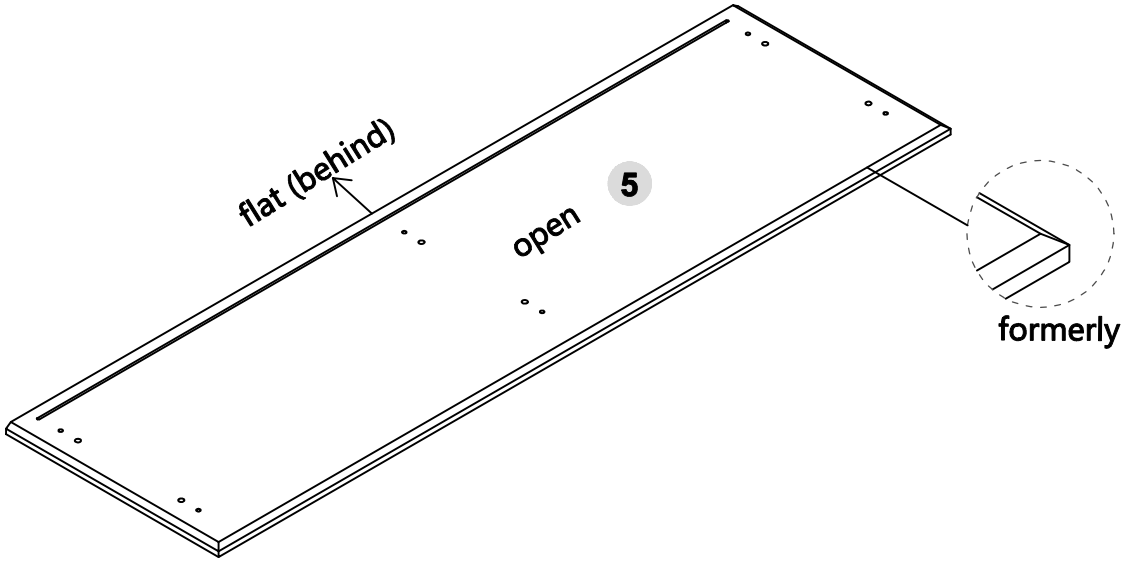
flat (behind)
open
5
formerly

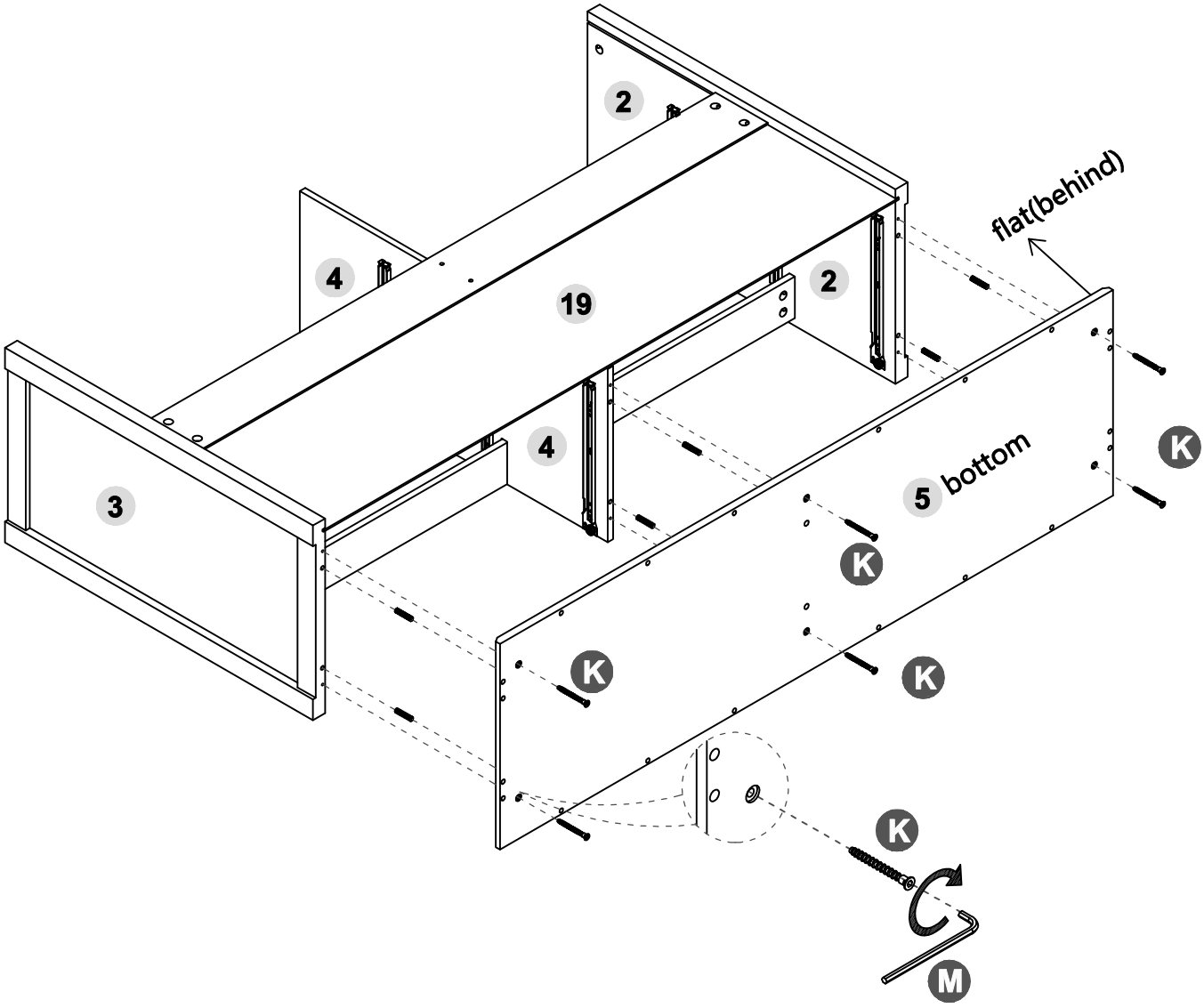
2
4
19
2
flat(behind)
4
3
5 bottom
K
K
K
K
K
M

STEP 10

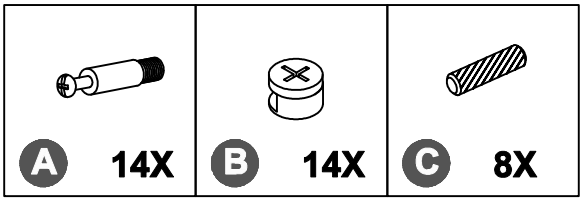

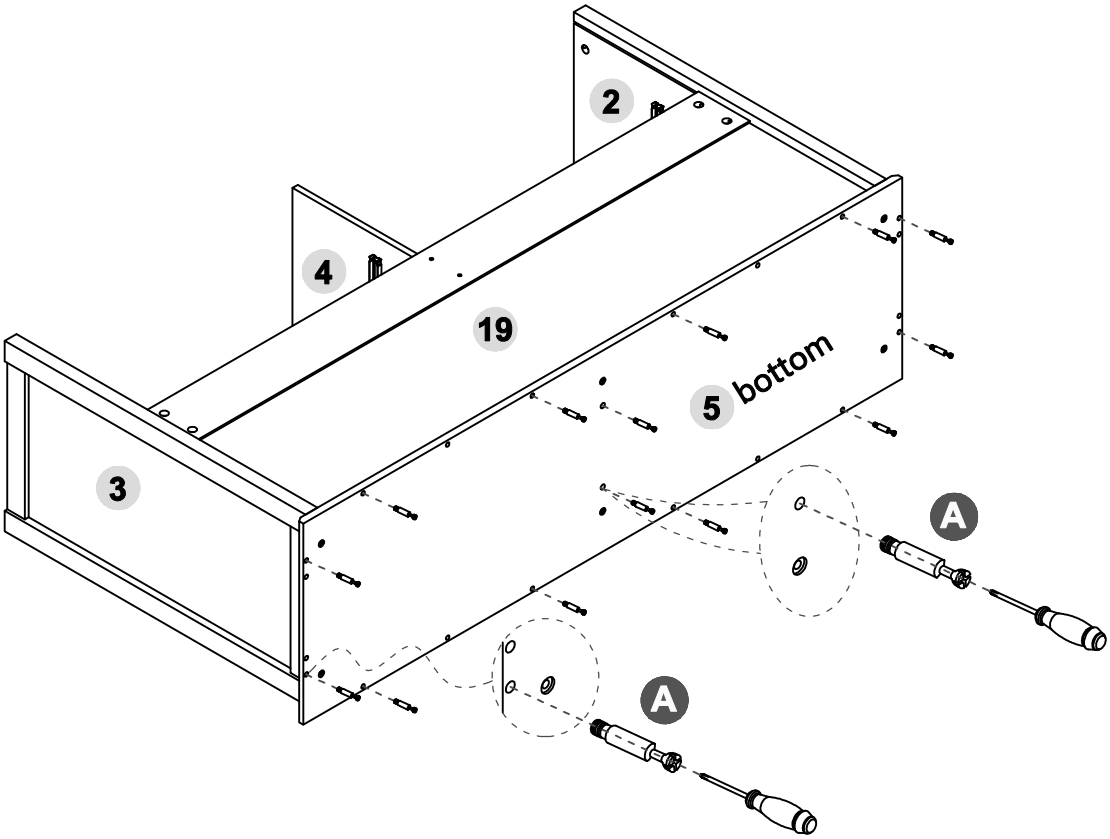

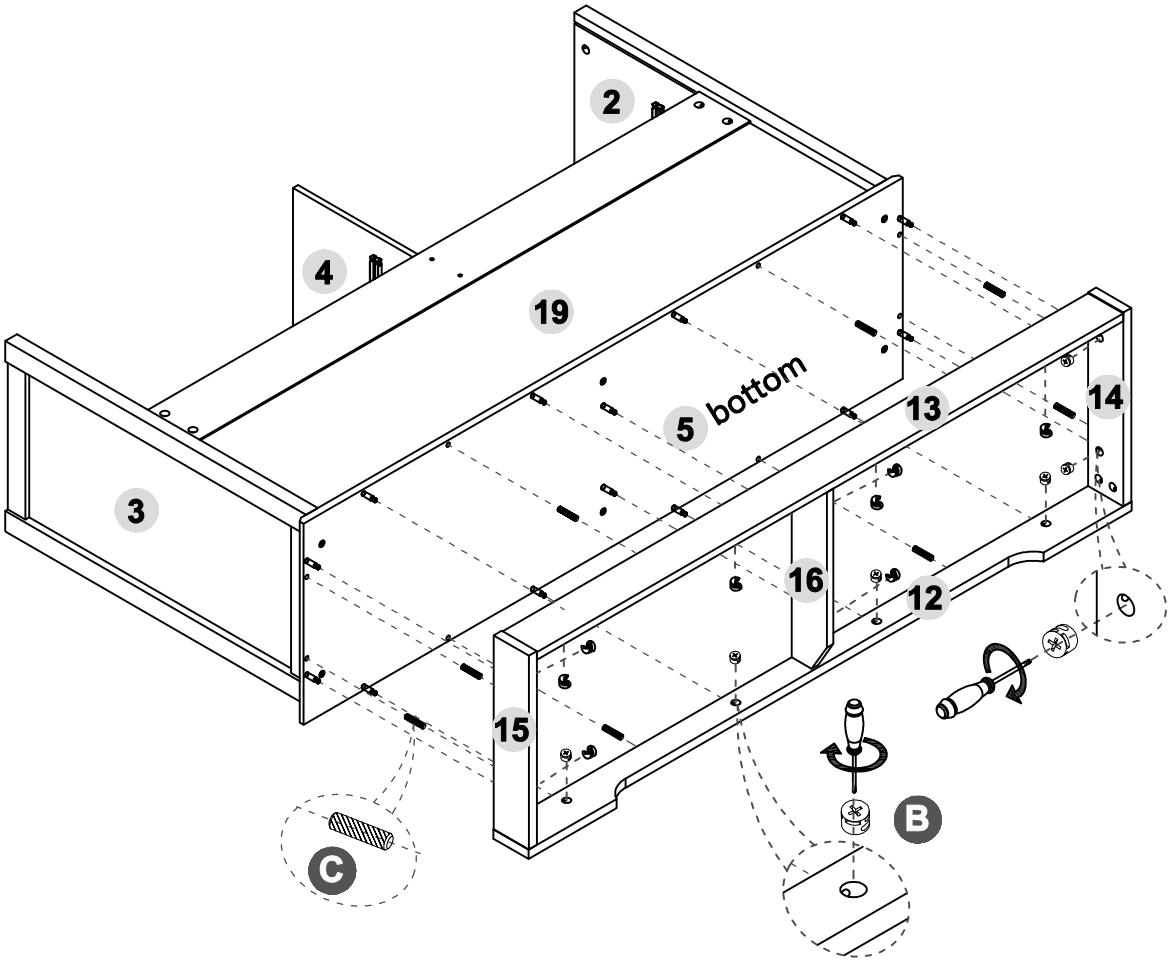

STEP 11

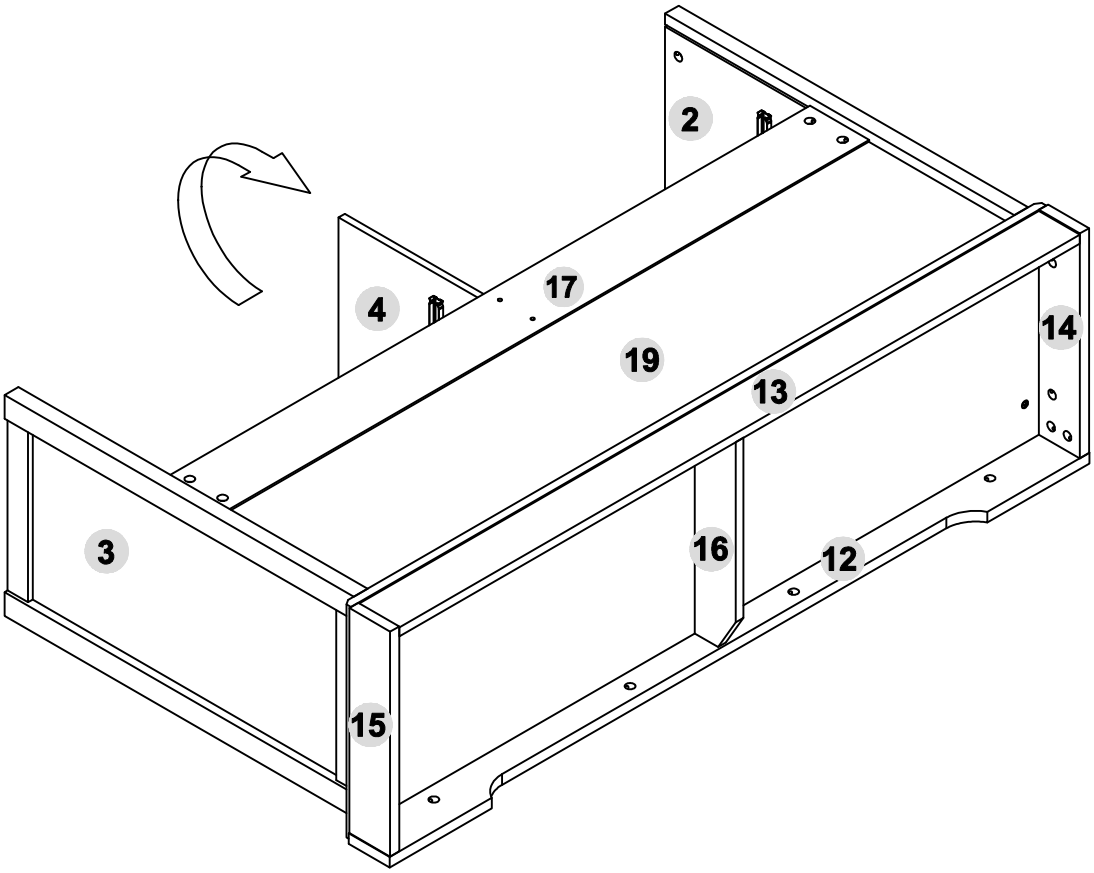

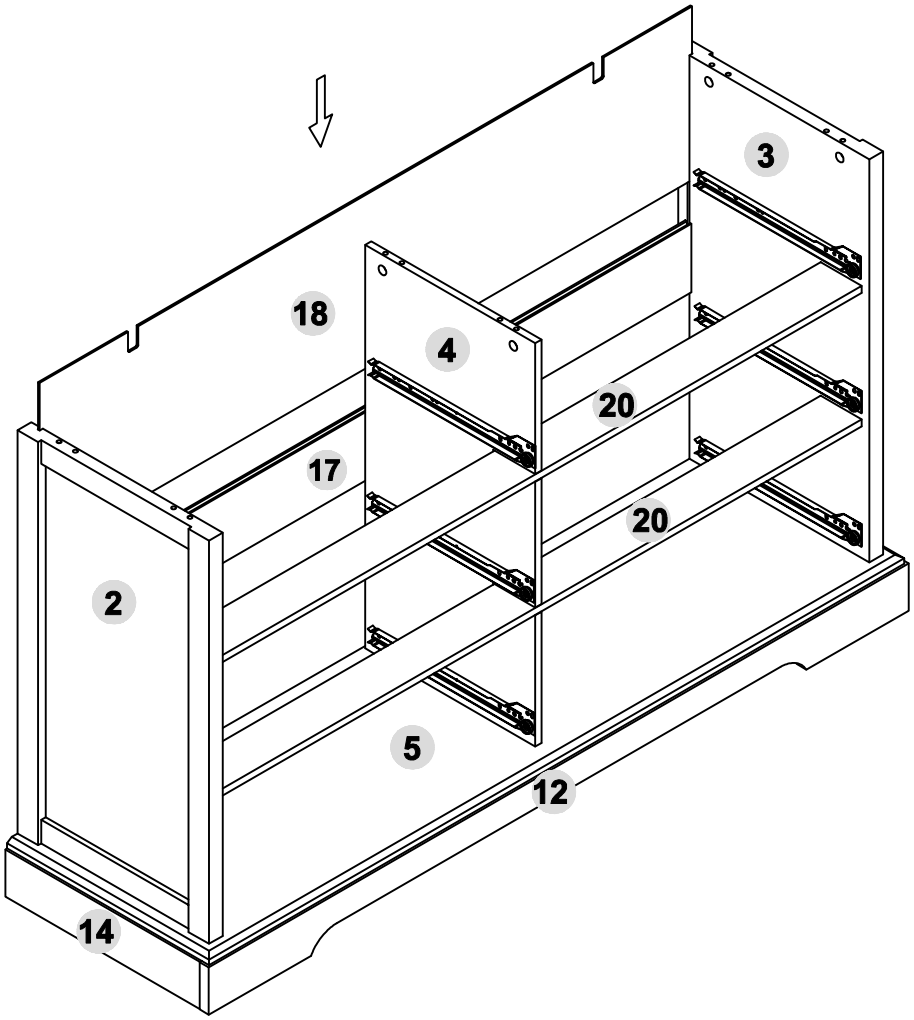

STEP 12

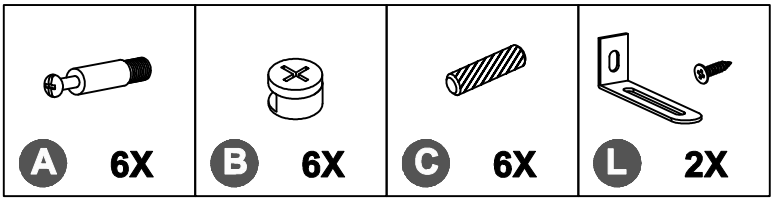

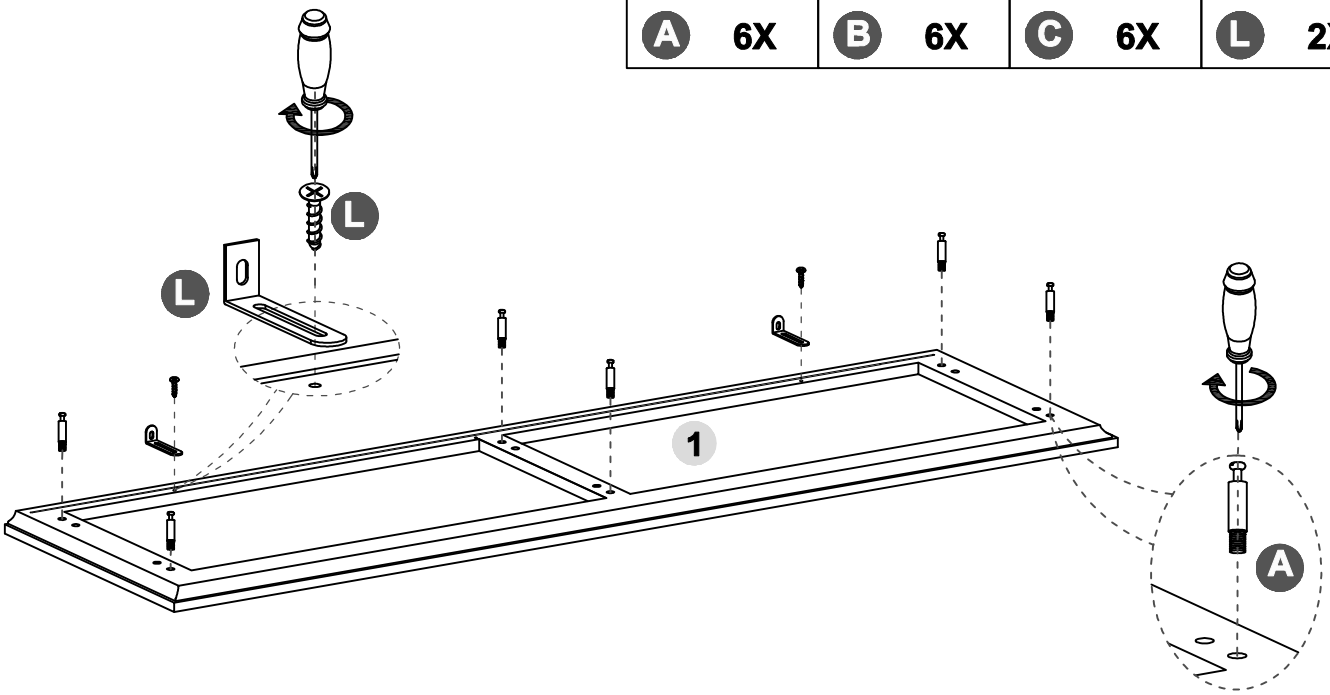

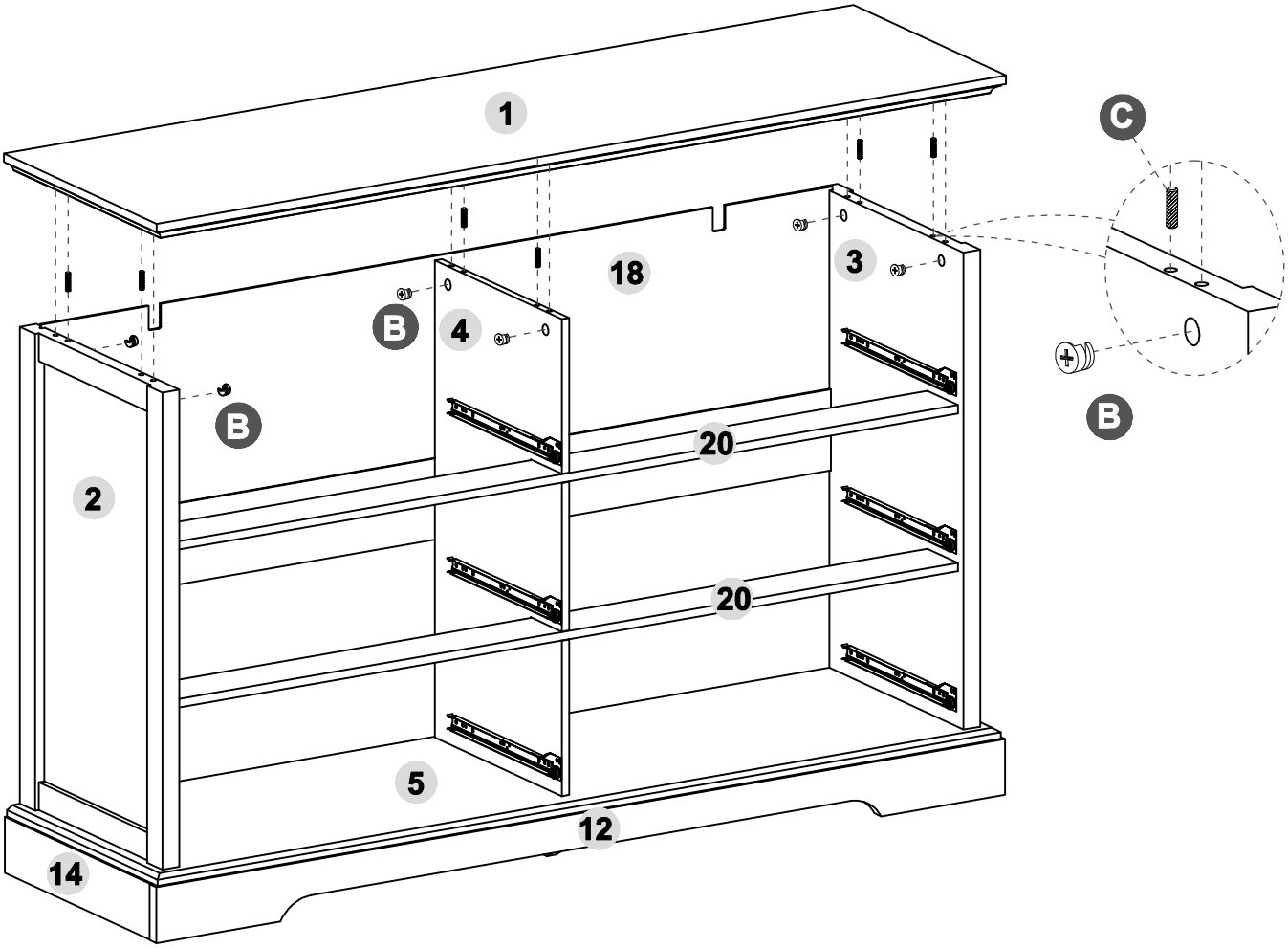

STEP 13

F 16X	G 16X

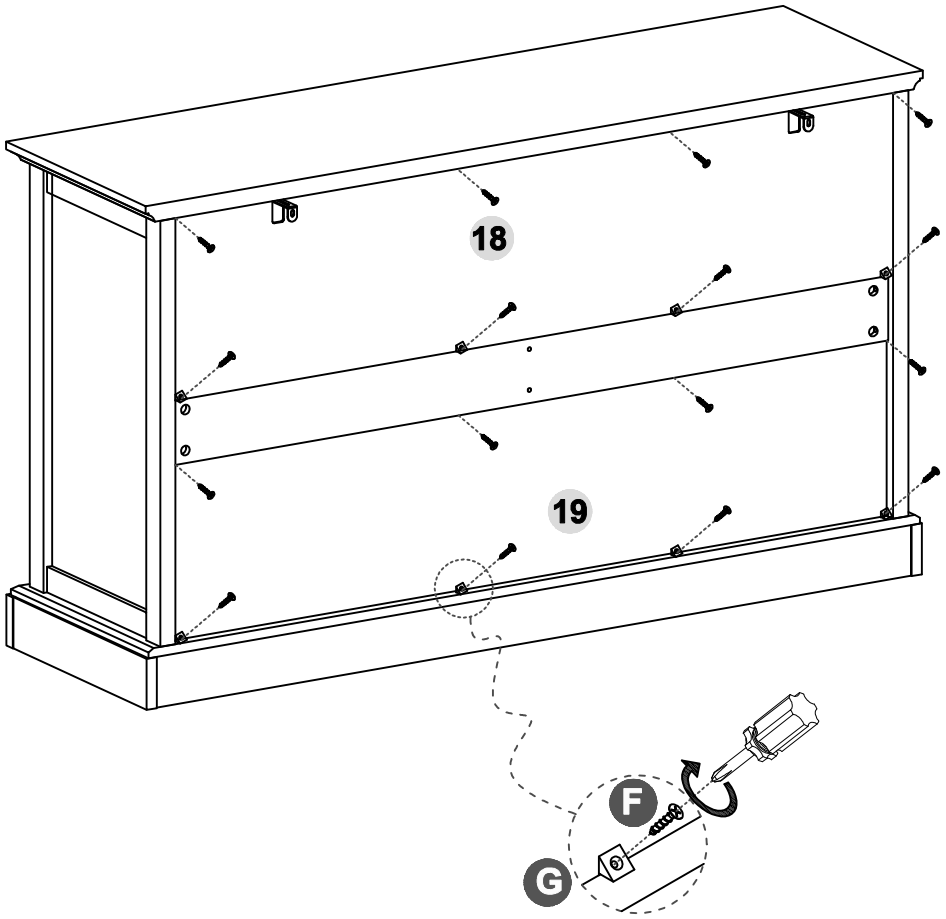

STEP 14

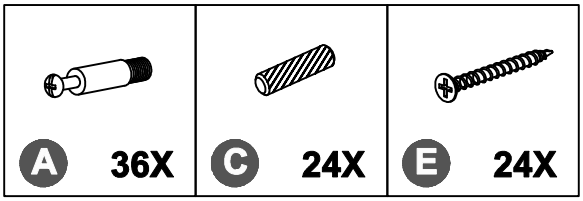

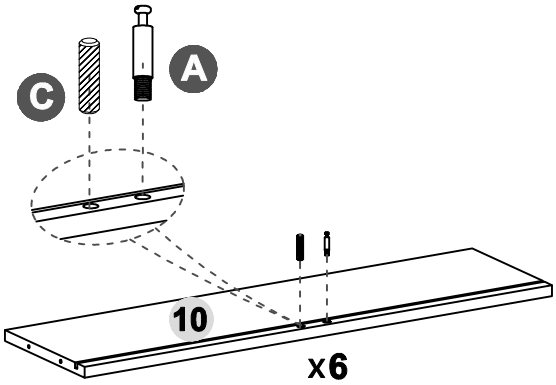

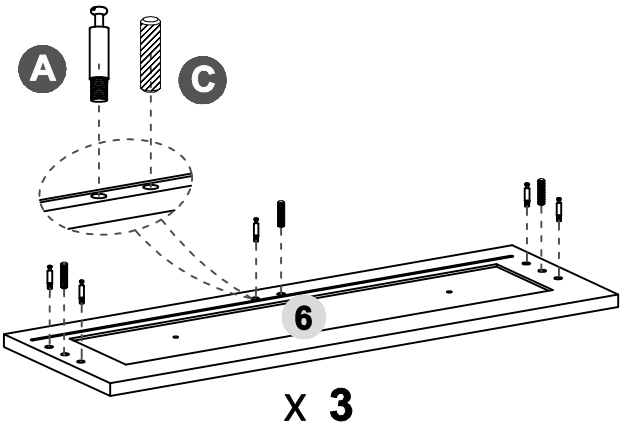

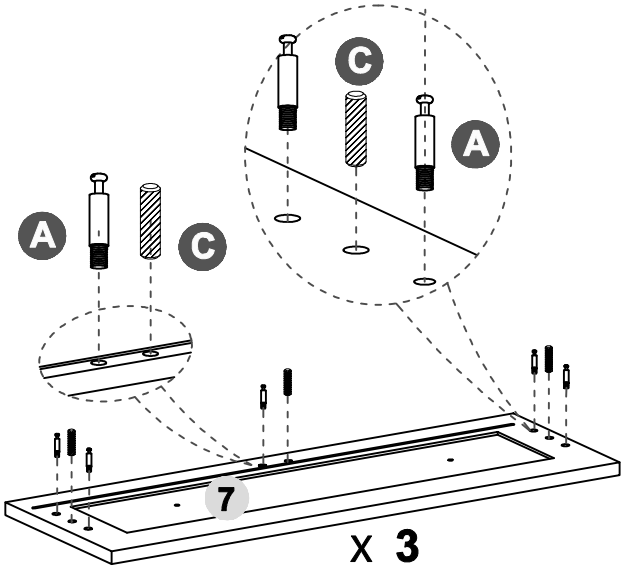

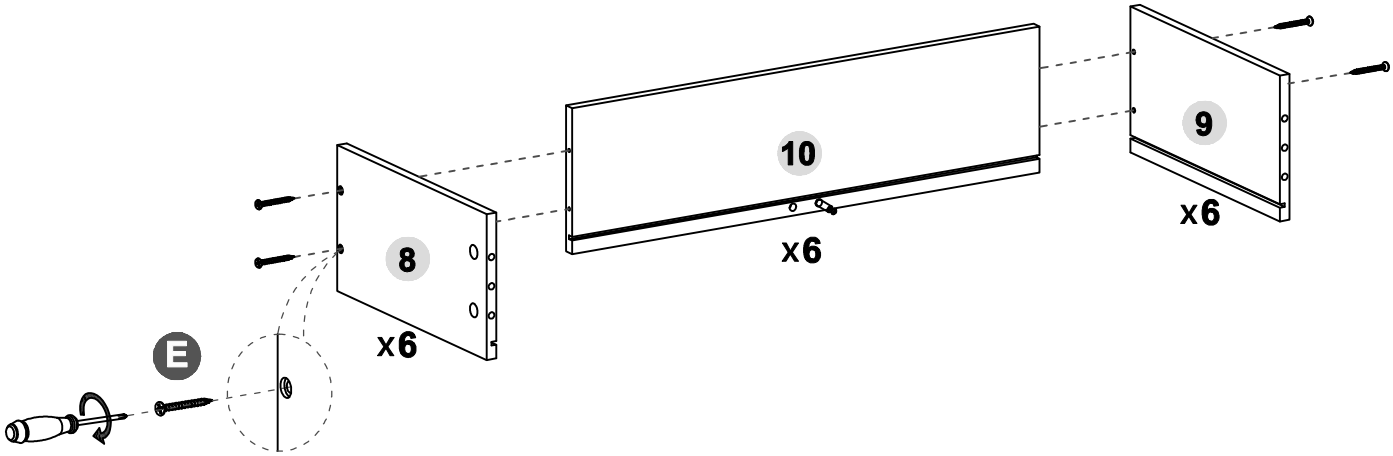

STEP 15

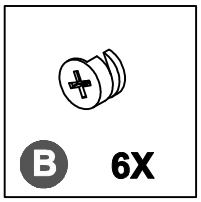

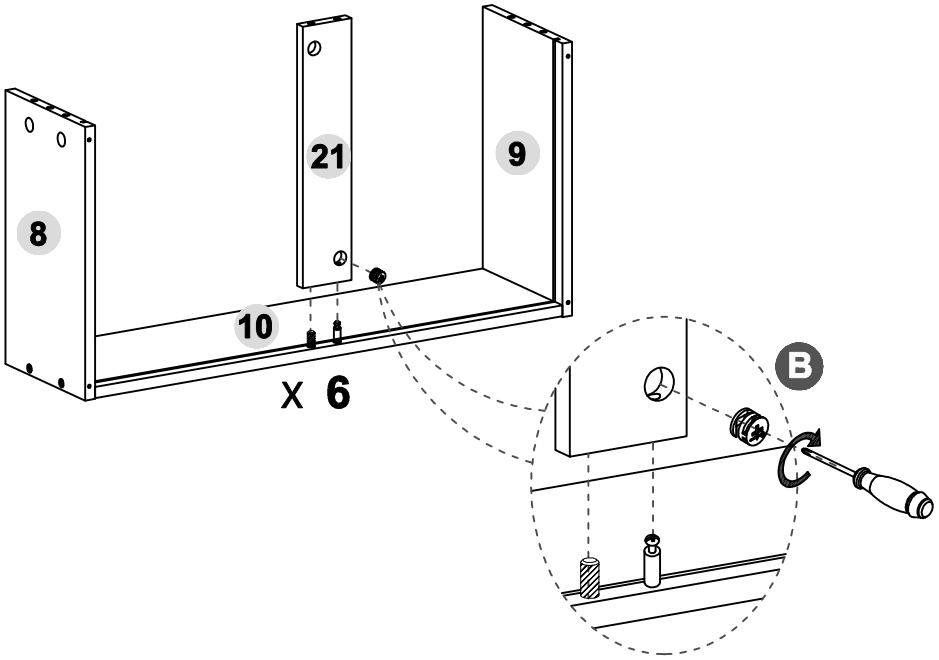

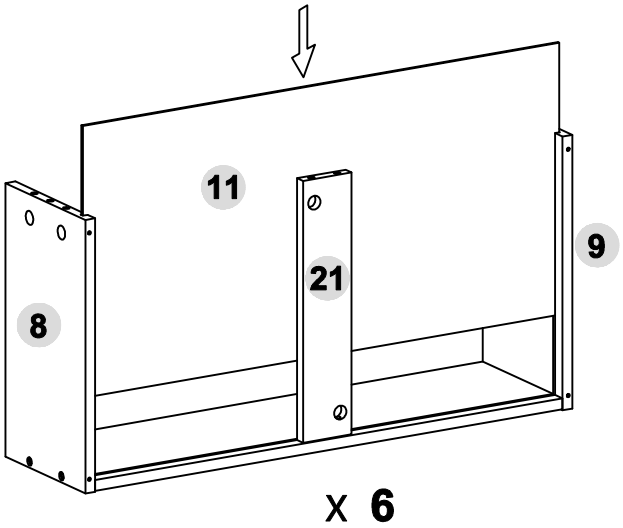

STEP 16

B 30X	I 12X	J 12X

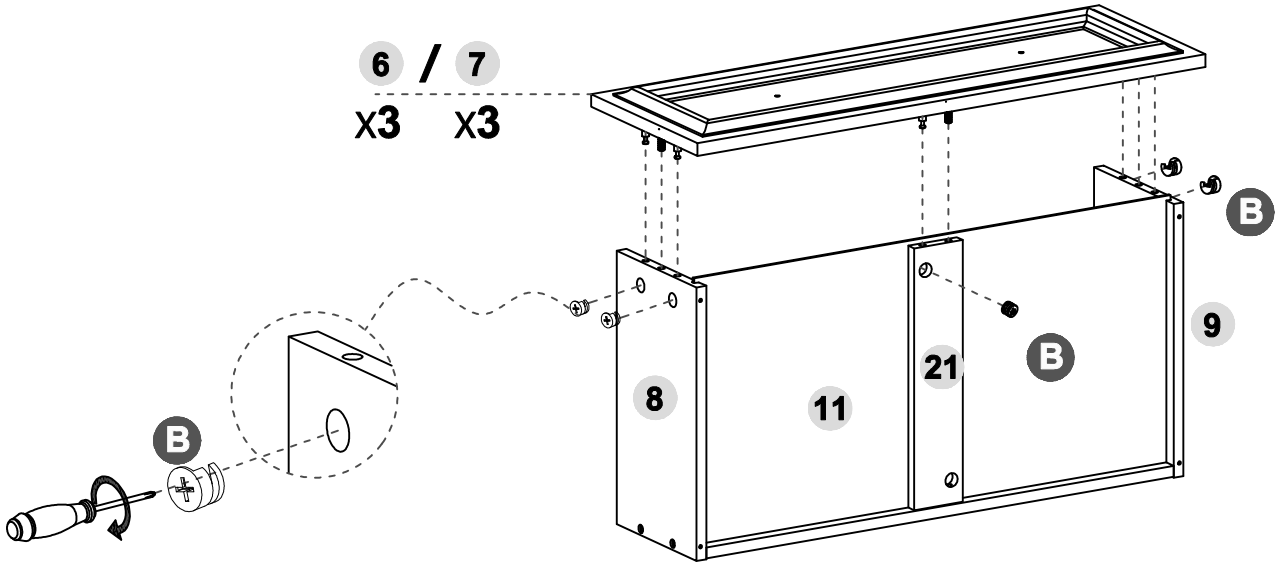

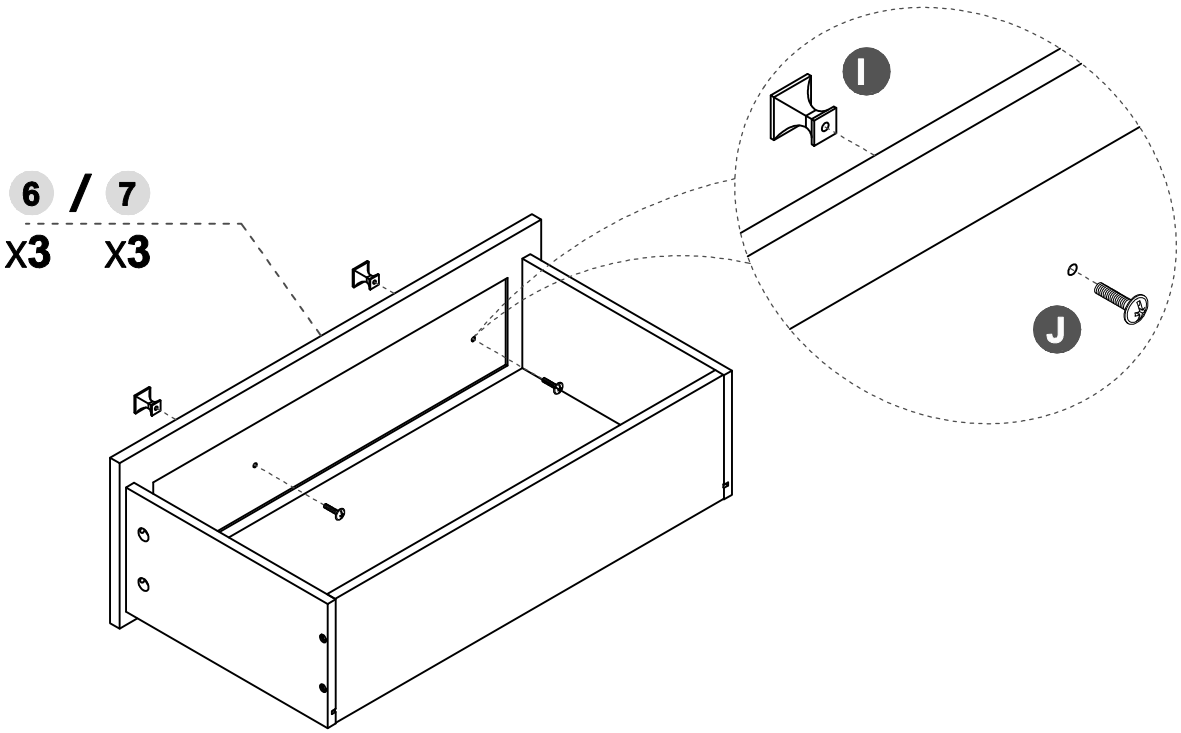

STEP 17

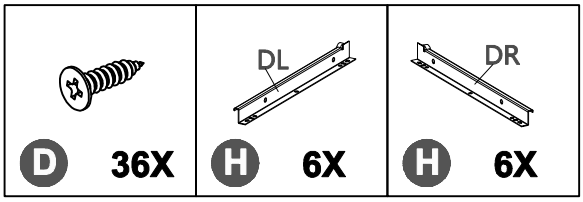

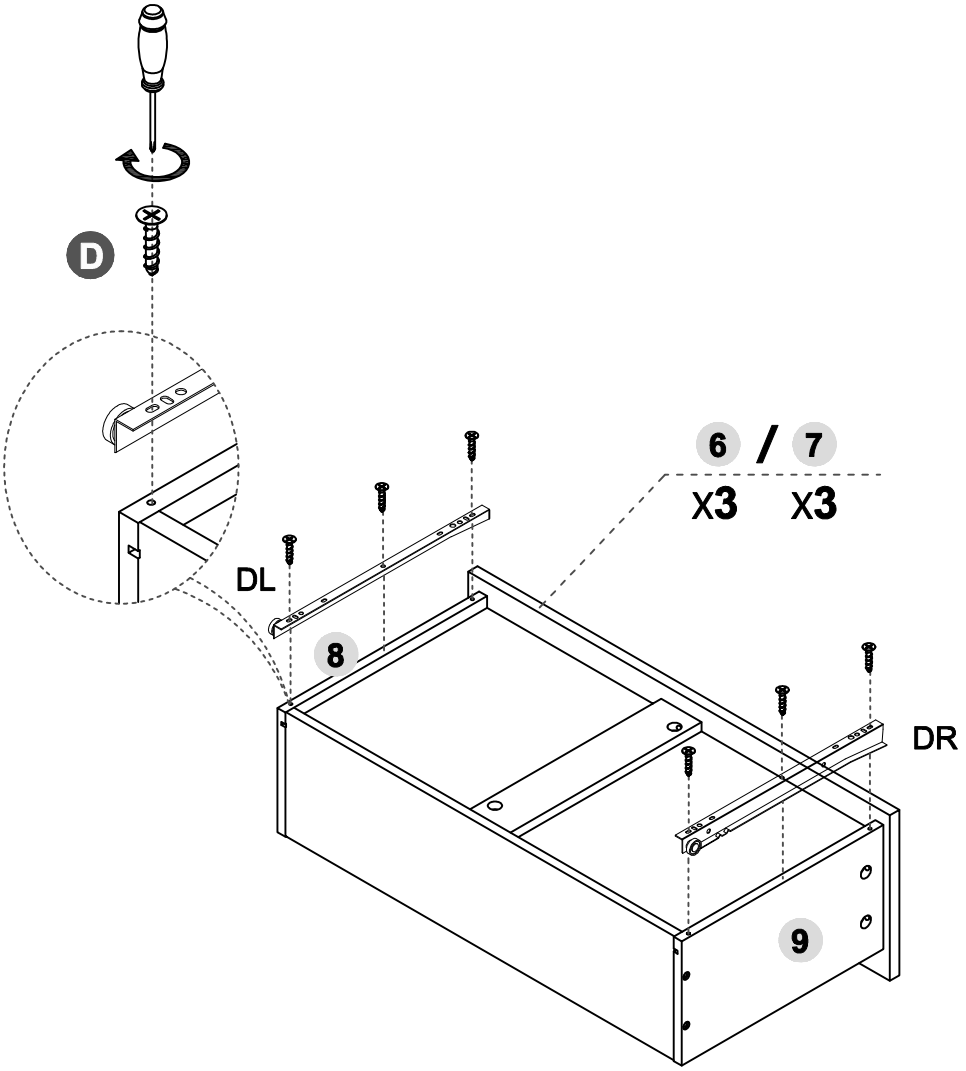

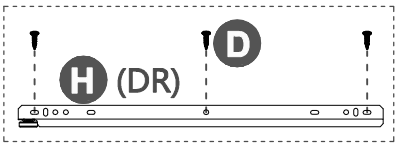

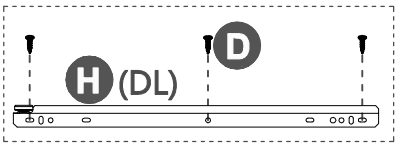

STEP 18

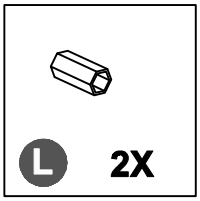

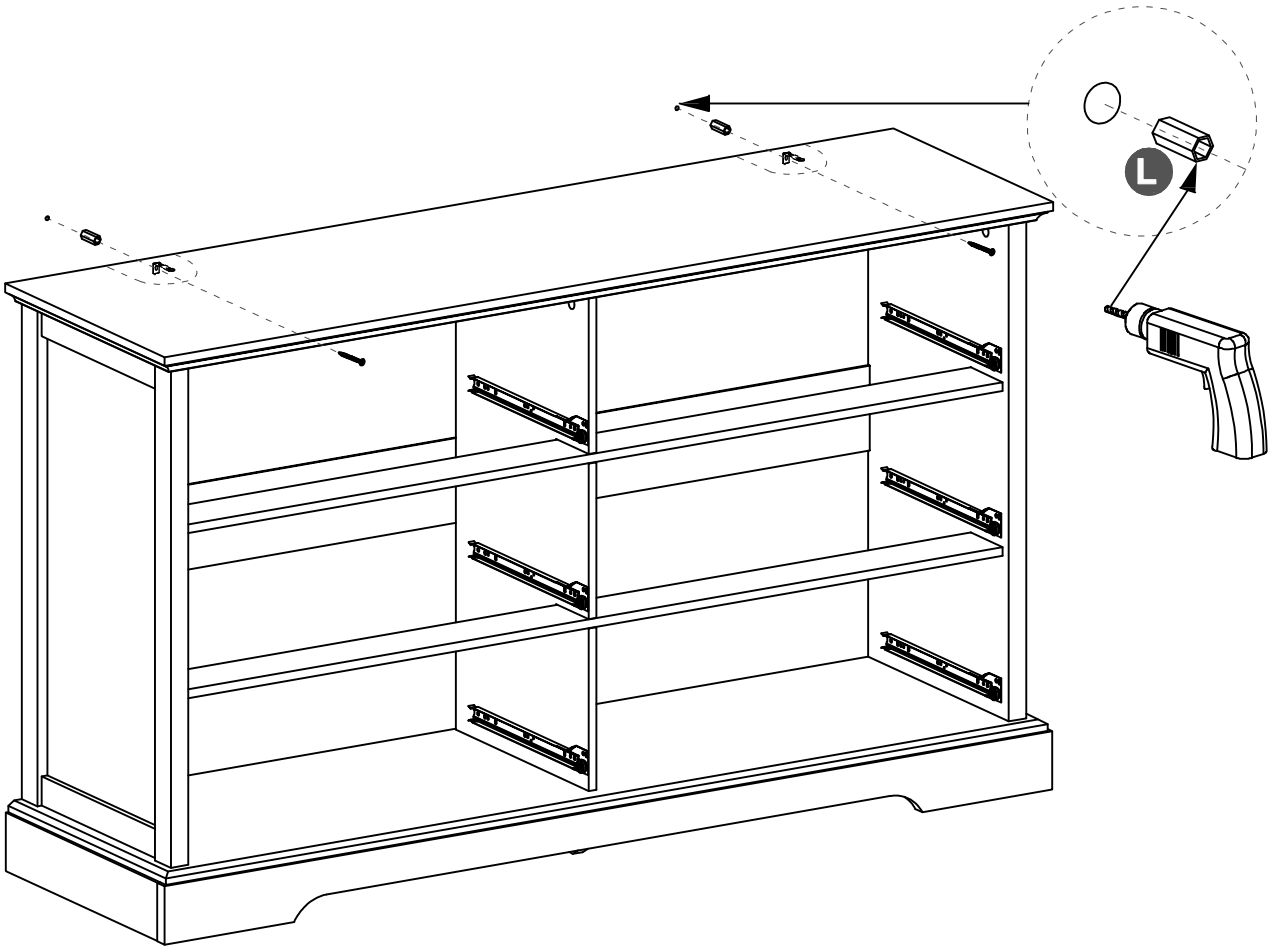

STEP 19

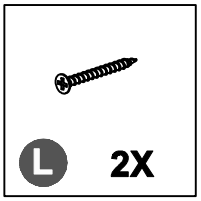

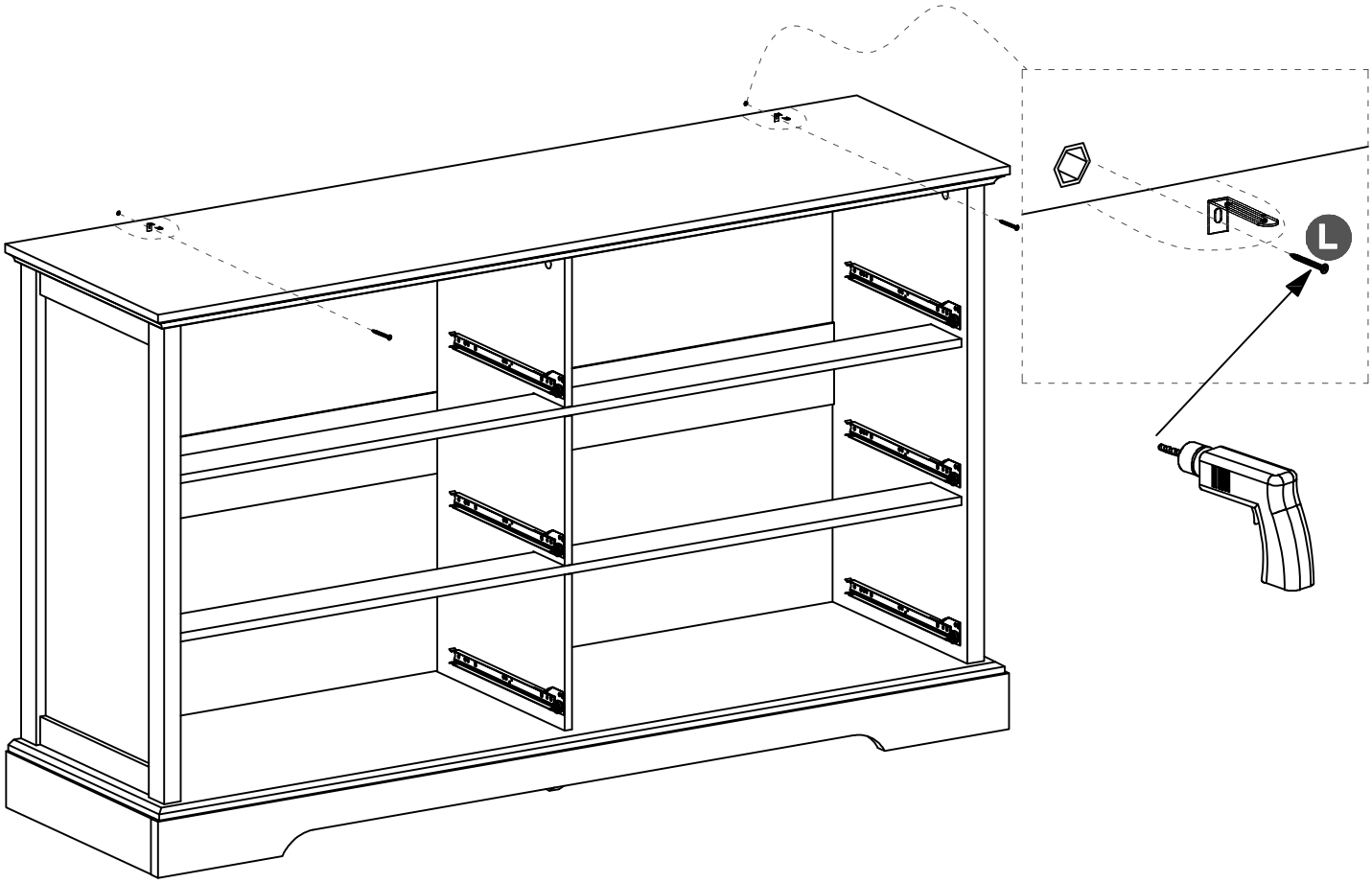

STEP 20

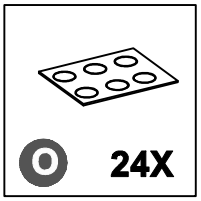

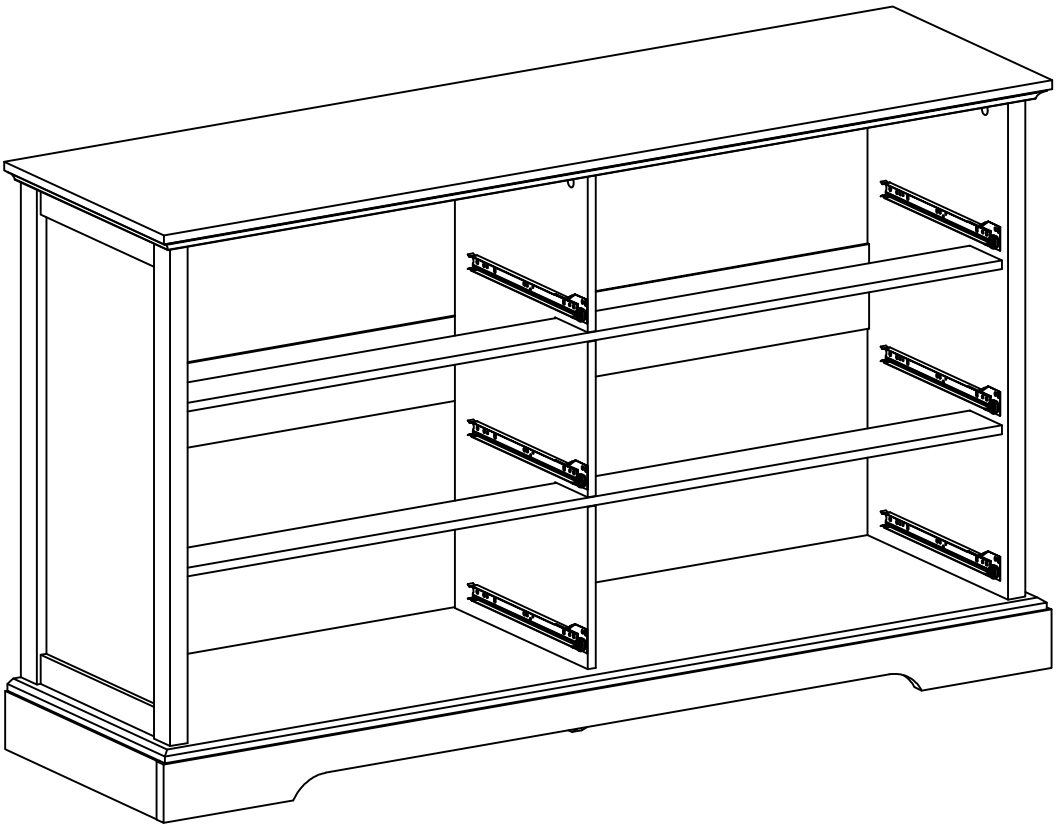

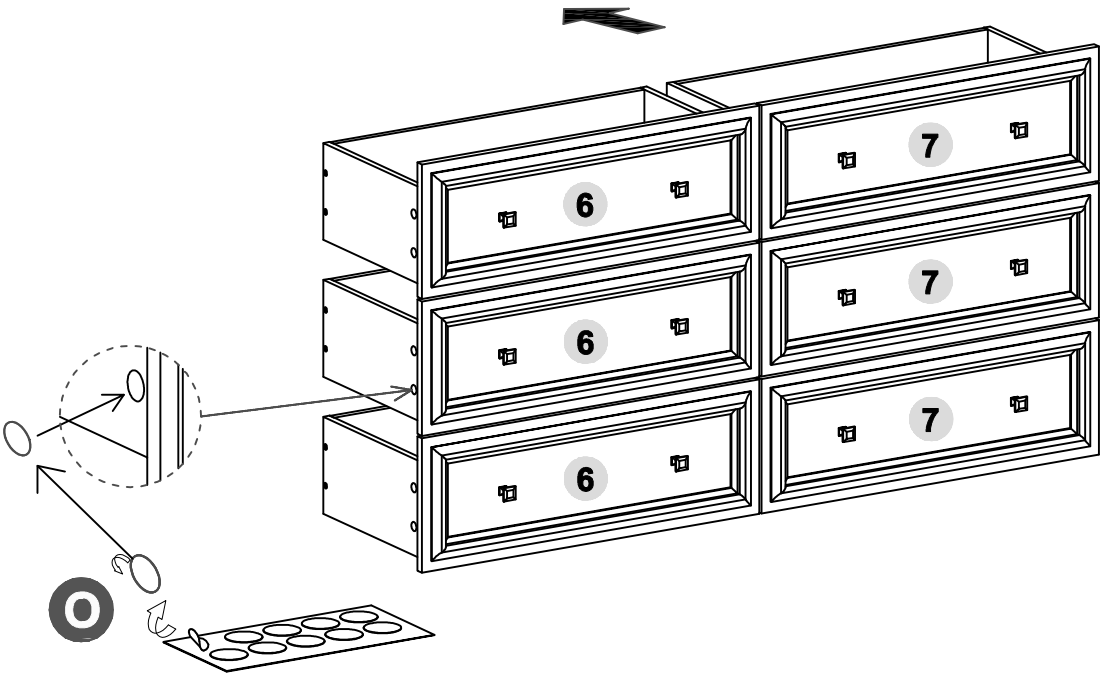

STEP 21

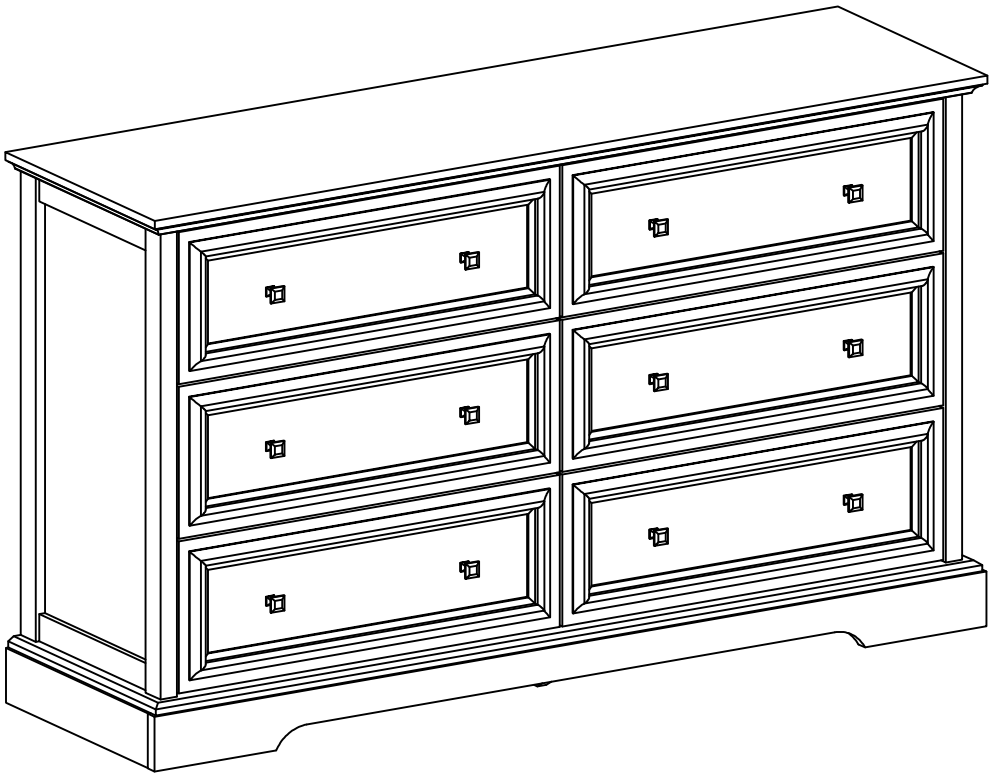

Congratulations on doing it.