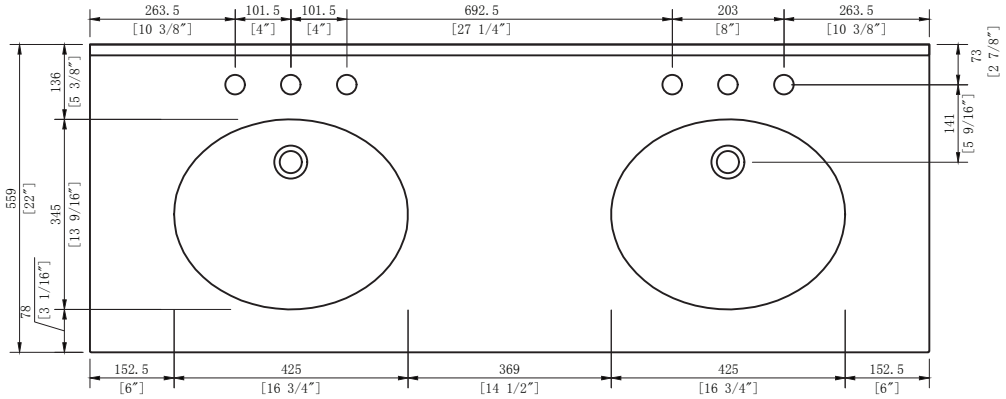
263.5
[10 3/8"]
101.5
[4"]
101.5
[4"]
692.5
[27 1/4"]
203
[8"]
263.5
[10 3/8"]
73
[2 7/8"]
141
[5 9/16"]
136
[5 3/8"]
559
[22"]
345
[13 9/16"]
78
[3 1/16"]
152.5
[6"]
425
[16 3/4"]
369
[14 1/2"]
425
[16 3/4"]
152.5
[6"]

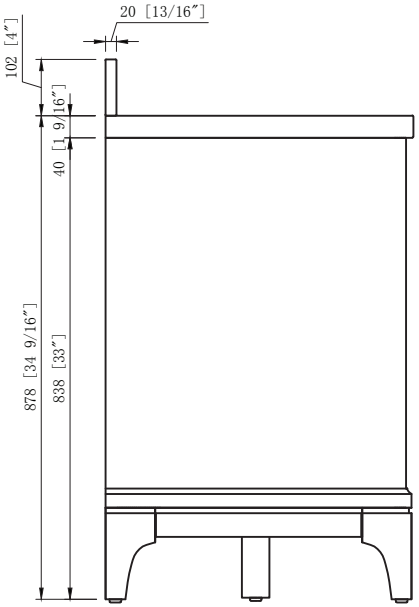
20 [13/16"]
102 [4"]
40 [1 9/16"]
878 [34 9/16"]
838 [33"]

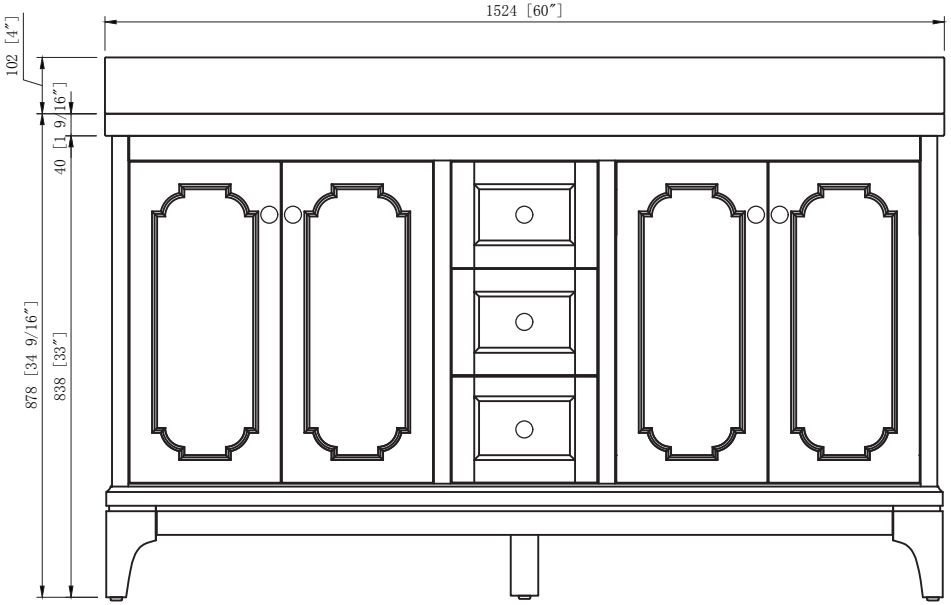
1524 [60"]
102 [4"]
40 [1 9/16"]
878 [34 9/16"]
838 [33"]

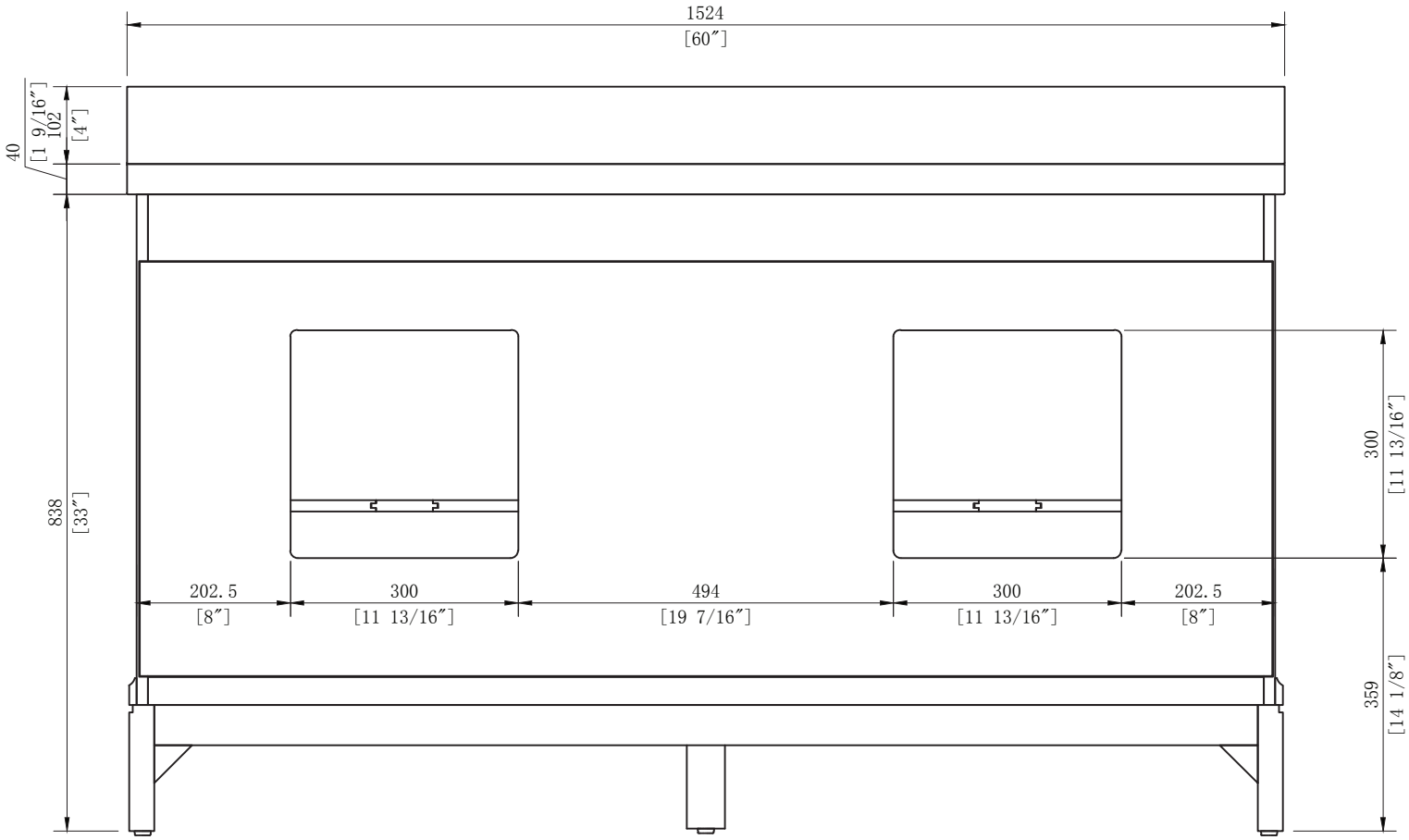
1524
[60″]
40
102
[1 9/16″]
[4″]
838
[33″]
300
[11 13/16″]
359
[14 1/8″]
202.5
[8″]
300
[11 13/16″]
494
[19 7/16″]
300
[11 13/16″]
202.5
[8″]

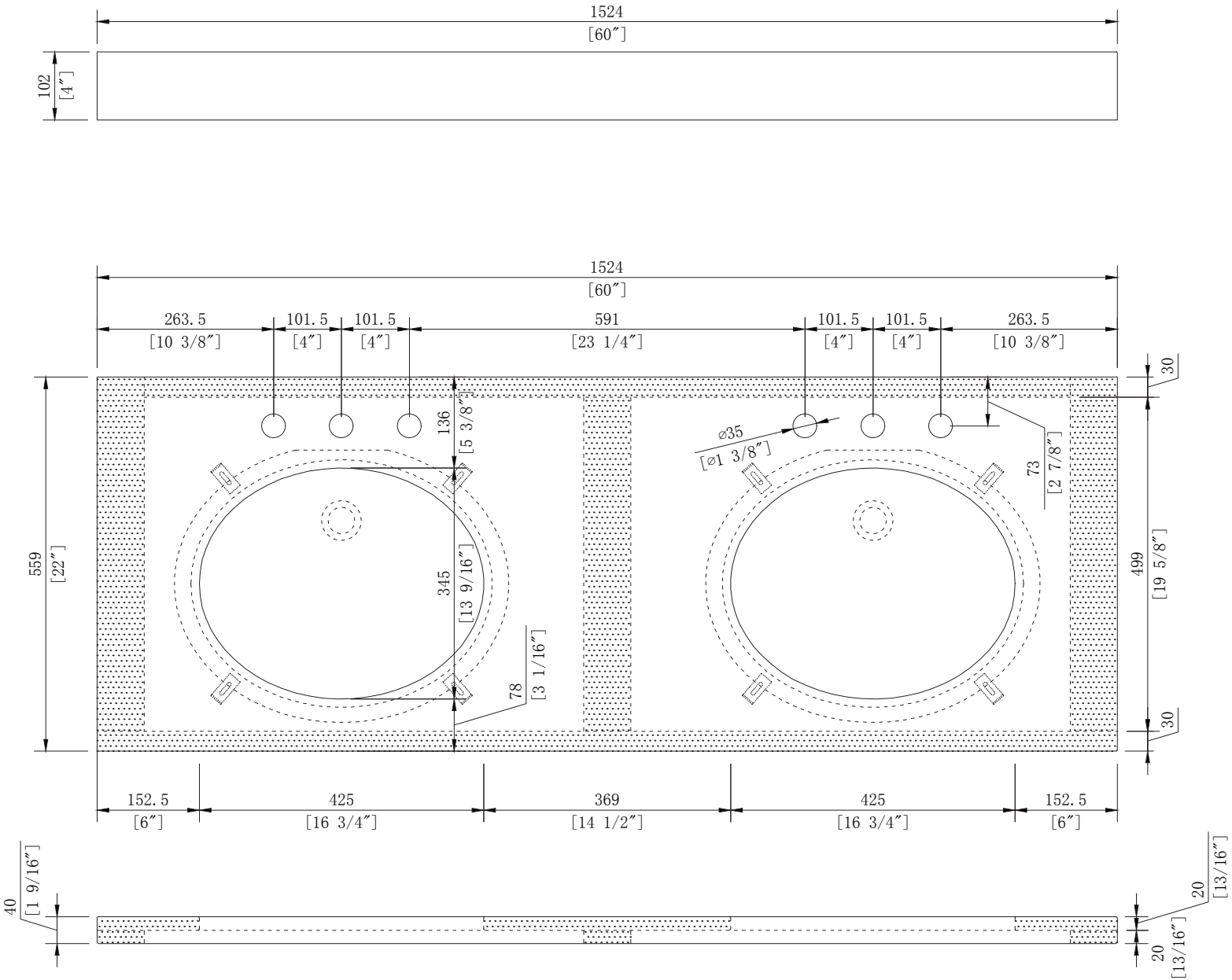
1524
[60″]
102
[4″]
1524
[60″]
263.5
[10 3/8″]
101.5
[4″]
101.5
[4″]
591
[23 1/4″]
101.5
[4″]
101.5
[4″]
263.5
[10 3/8″]
30
136
[5 3/8″]
ø35
[ø1 3/8″]
73
[2 7/8″]
559
[22″]
345
[13 9/16″]
78
[3 1/16″]
499
[19 5/8″]
30
152.5
[6″]
425
[16 3/4″]
369
[14 1/2″]
425
[16 3/4″]
152.5
[6″]
40
[1 9/16″]
20
[13/16″]
20
[13/16″]

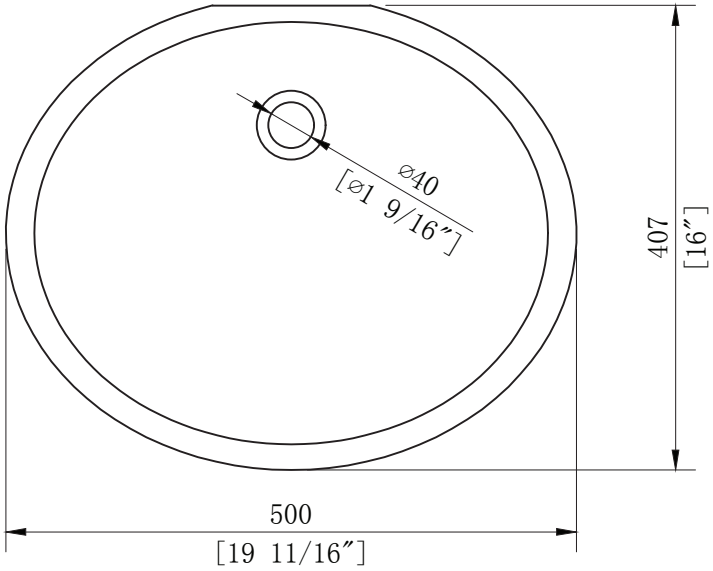
⌀40
[⌀1 9/16″]
407
[16″]
500
[19 11/16″]

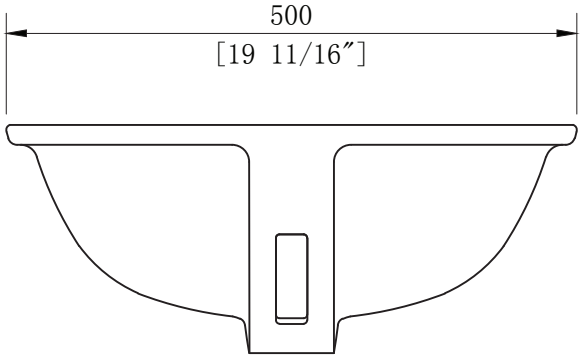
500
[19 11/16″]

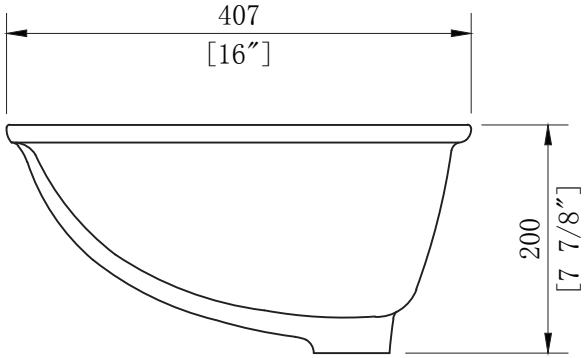
407
[16″]
200
[7 7/8″]

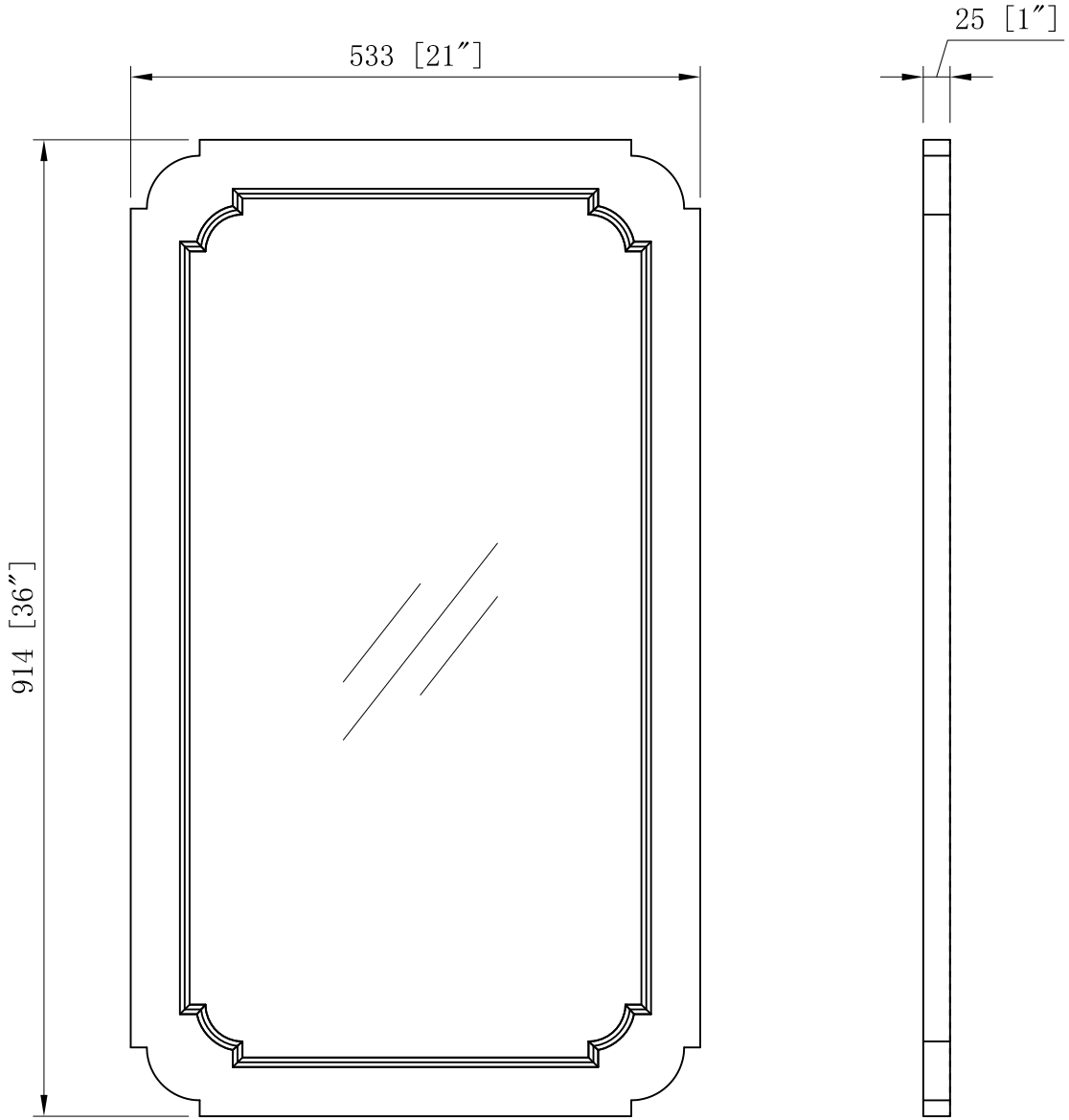
533 [21″]
914 [36″]
25 [1″]

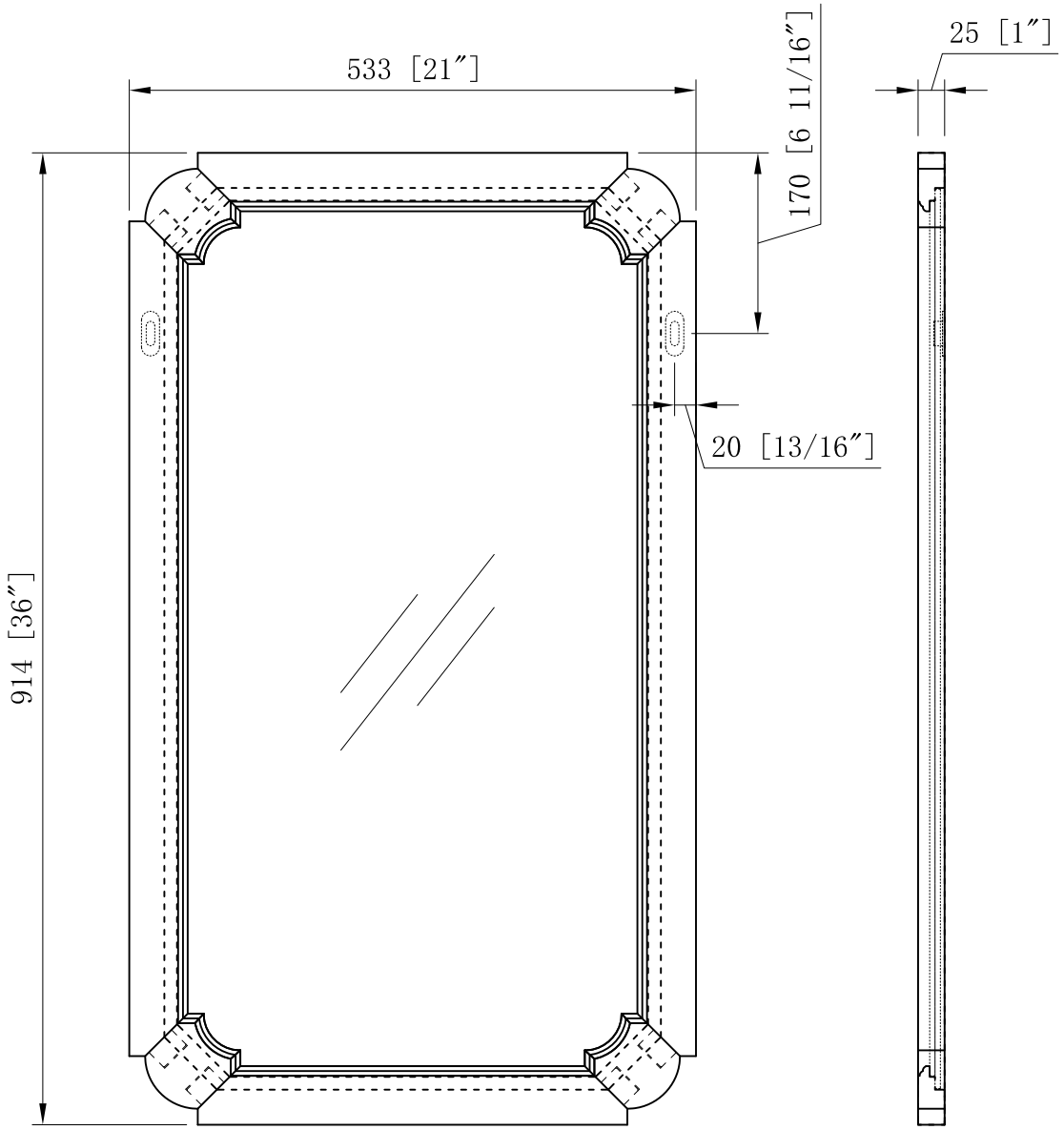
533 [21″]
170 [6 11/16″]
25 [1″]
914 [36″]
20 [13/16″]

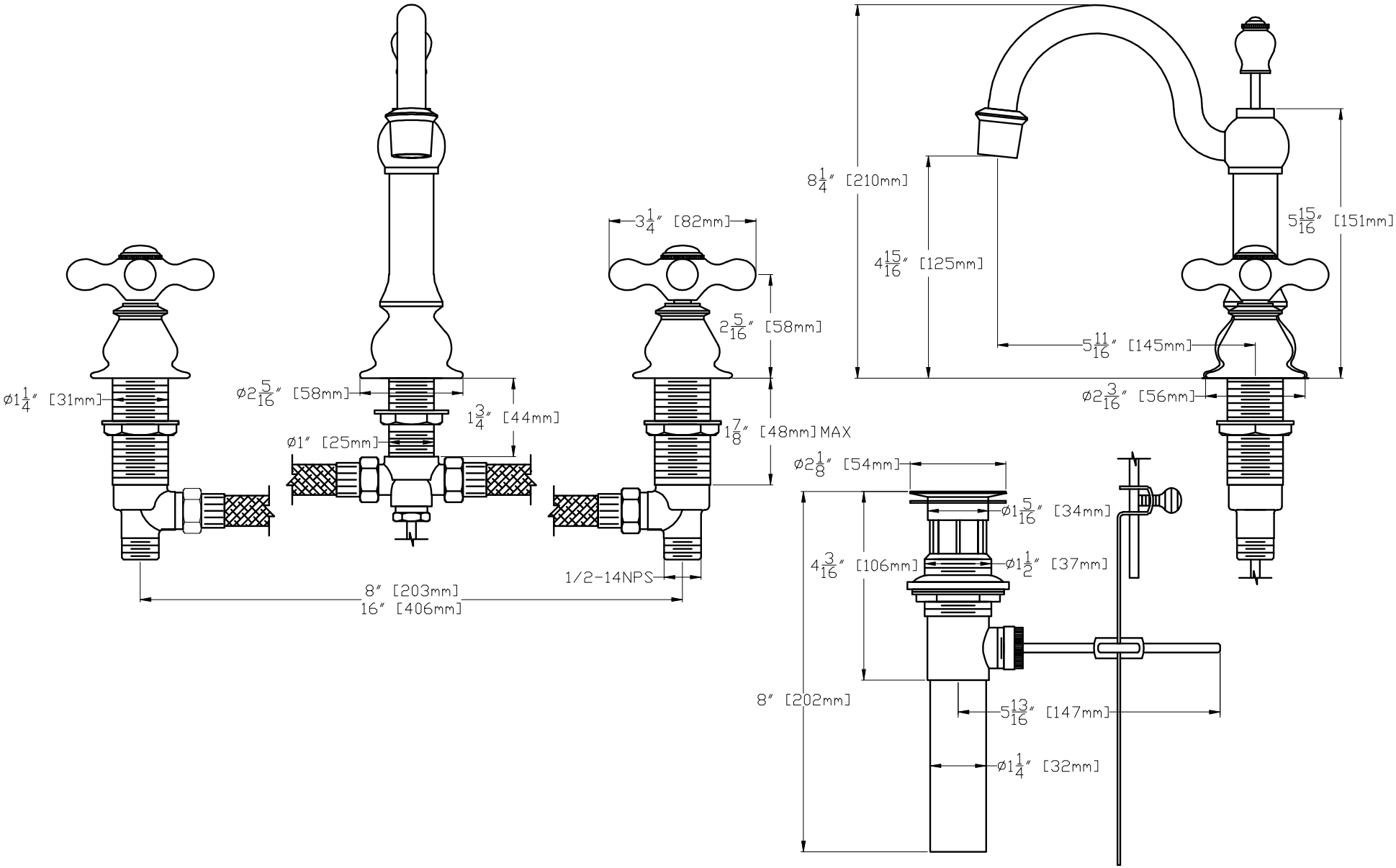
3 1/4″ [82mm]
2 5/16″ [58mm]
1 7/8″ [48mm] MAX
ø1 1/4″ [31mm]
ø2 5/16″ [58mm]
1 3/4″ [44mm]
ø1″ [25mm]
1/2-14NPS
8″ [203mm]
16″ [406mm]
8 1/4″ [210mm]
4 15/16″ [125mm]
5 15/16″ [151mm]
5 11/16″ [145mm]
ø2 3/16″ [56mm]
ø2 1/8″ [54mm]
ø1 5/16″ [34mm]
4 3/16″ [106mm]
ø1 1/2″ [37mm]
8″ [202mm]
5 13/16″ [147mm]
ø1 1/4″ [32mm]