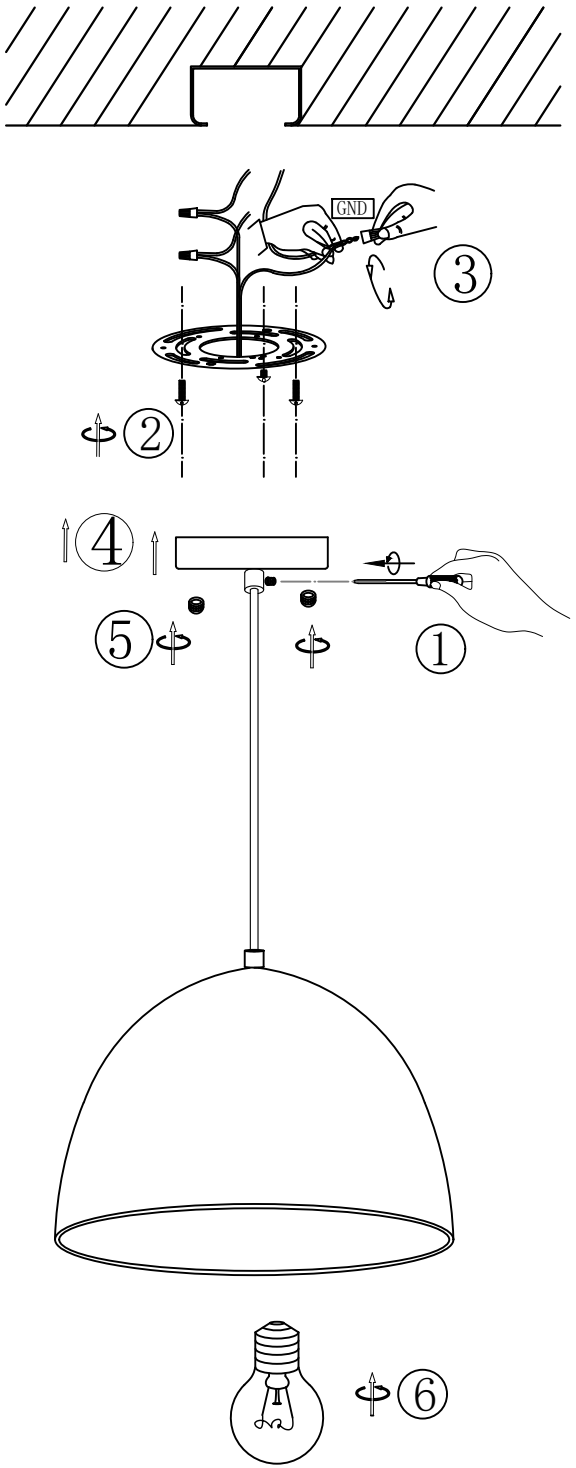

PREPARATION before INSTALLATION:

1. If an existing fixture is being replaced, remove it and note to which wire in the outlet box the original fixture was attached.
2. Before discarding the carton, double-check the packaging to make sure all parts have been found.
3. This fixture was designed to be mounted on an octagon outlet box. The box must be securely mounted to the structure of the building.

IMPORTANT:

1. WARNING - Disconnect power before relamping or wiring the fixture.
Turn off the entire electrical circuit to which the lighting fixture is attached.
2. Installation and maintenance of this fixture should be completed by a licensed electrician.
3. Failure to install the fixture correctly could result in serious injury or death.
4. Read all instructions before starting installation.

INSTALLATION STEPS:

1.Loosen the ceiling plate screws to adjust the suspension cord height, then tighten the screws to secure it.

2.Fix the mounting bracket to the junction box using screws.

3.Connect the fixture's wires to the matching wires in the junction box — black to black (hot), white to white (neutral), and green or bare copper to ground.

(Note: Ensure that no bare wires are exposed to prevent electrical shock.)

4-5. Cover the ceiling plate onto the mounting bracket, then tighten the decorative nuts to secure it.

6.Install the bulb (not included).