Mississippi Conversation Set

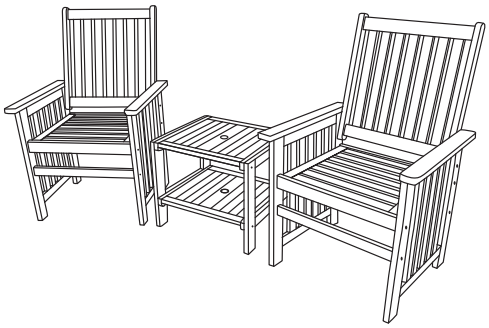

30 min

x 2

No Tools Required

CARE INSTRUCTION:

This Furniture was treated with teak oil at the factory. To maintain the original appearance, you need to treat with a suitable wood oil at least once a year. Left untreated, the wood will weather to a silvery grey.

As timber is a living product you may find that you need to periodically tighten any fittings.

Covering or stroring your furniture to protect it from ice and snow will keep it looking even better for even longer!

PART 1: SIDE TABLE ASSEMBLY

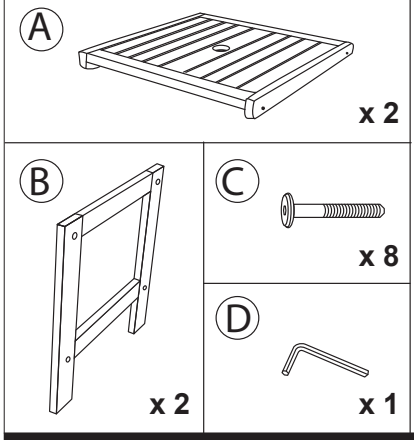

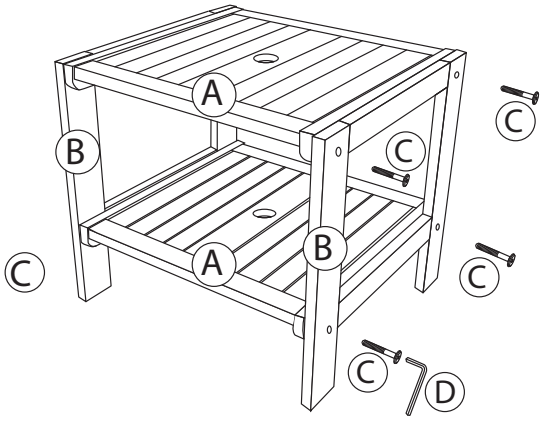

PART 2: CHAIR ASSEMBLY

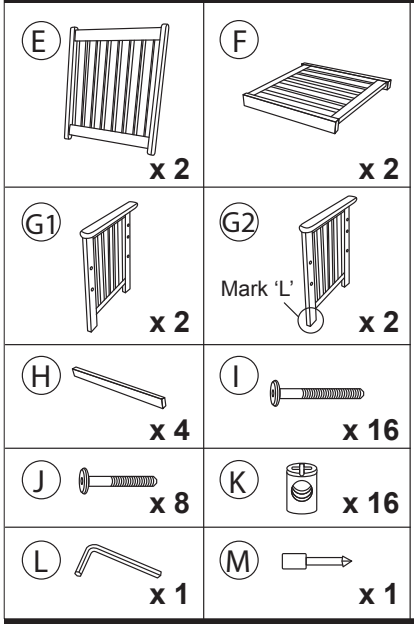

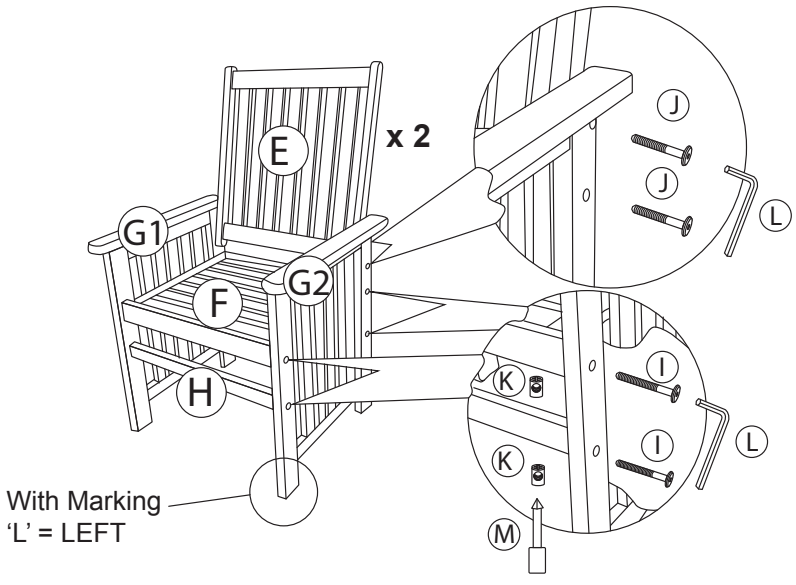

REMINDER: Please do not tighten any screw until all of them are in right positions.