ASSEMBLY INSTRUCTIONS

IMPORTANT
PLEASE READ BEFORE YOU CONTINUE FURTHER

ASSEMBLY PREPARATION

1. Keep the bench top inside the carton during leg installation.
2. Refer to the Parts List and Hardware List to ensure all parts and hardware are correct before starting assembly.

SAFETY PRECAUTIONS

1. KEEP ALL HARDWARE PARTS OUT OF REACH OF CHILDREN.
2. DISPOSE OF PLASTIC PACKAGING MATERIALS IMMEDIATELY TO AVOID ANY RISK OF SUFFOCATION TO CHILDREN AND ANIMALS.

TIPS FOR ASSEMBLY

1. Assemble the bench while keeping the bench top protected inside the carton until all legs are fully installed. Ensure the surrounding carton is fully opened to avoid assembly difficulties.
2. Identify all parts, hardware, and quantities required for each step.
3. Avoid over-tightening any fittings during assembly, as this may cause damage.
4. Use hand tools only. DO NOT USE POWER TOOLS TO ASSEMBLE THIS PRODUCT.
5. Always assemble the product on a flat, level surface.
6. Assembly requires two or more people. Do not attempt to assemble the product alone, as there is a risk of injury.
7. Do not sit or stand on the partially assembled product. Use the product only for its intended purpose.

WARNINGS

1. This product is intended for indoor and household use only, and is not suitable for commercial use.
2. Two people are required to move the bench. Do not move it alone or drag the bench.
3. Do not stand or climb on the bench.



- DO NOT DRAG THE BENCH
- DO NOT STAND ON THE BENCH

Please make sure you have all these parts before you start.

PART LIST

Ⓐx 1pc 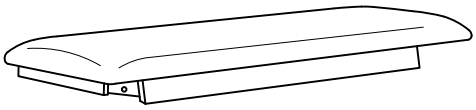	Ⓑx 2pcs 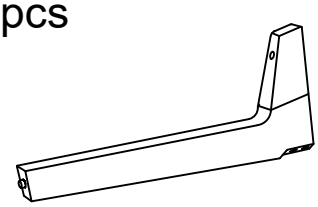
Ⓒx 2pcs 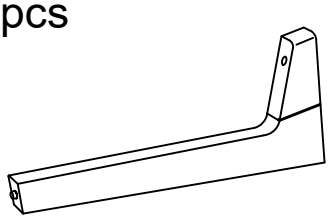	

HARDWARE LIST

①x (8pcs +1) 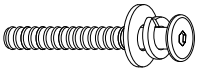 JCBB BOLT M8 x 70mm MS + SW 5/16" + FW 5/16" x 22mm	②x (4pcS +1) 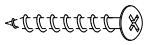 PAN HEAD CB SCREW M4 X 32MM	③x 1pc  ALLEN KEY M5
1pc (Extra) 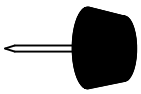 PVC NAIL - 5/8" (WITH PIN)	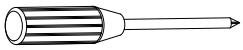 **NOT PROVIDED**	

(Extra Hardware for spare use)

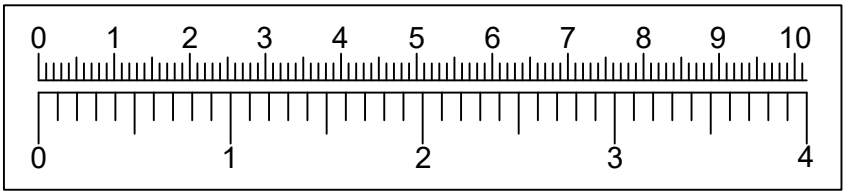

Important Notes Before Assembly:

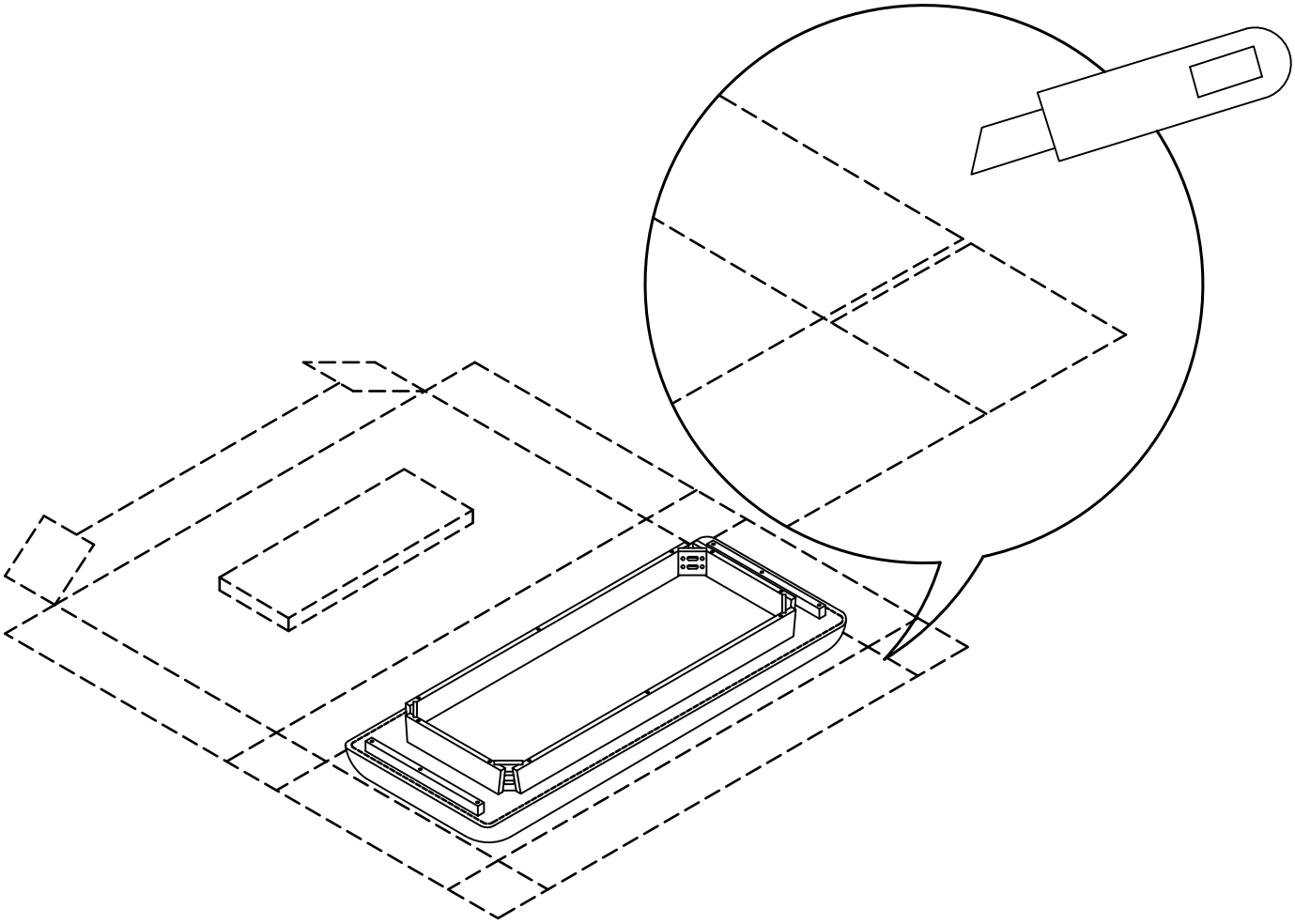

1. **Keep the bench top inside the carton during leg installation. Leave the styrofoam protection under the table top to prevent scratches or damage while doing installation.**

2. **Do not place the bench top directly on the floor before the legs are installed, as this may cause surface scratches.**

3. **Cut open all 4 corners of the carton completely so the carton can lie flat. This will make the assembly process smoother and easier.**

STEP 1

1	 JCBB BOLT M8 x 70mm MS + SW 5/16" + FW 5/16" x 22mm	8PCS

Tighten all bolts slightly loose. Once aligned, fully tighten all bolts but do not over-tighten.

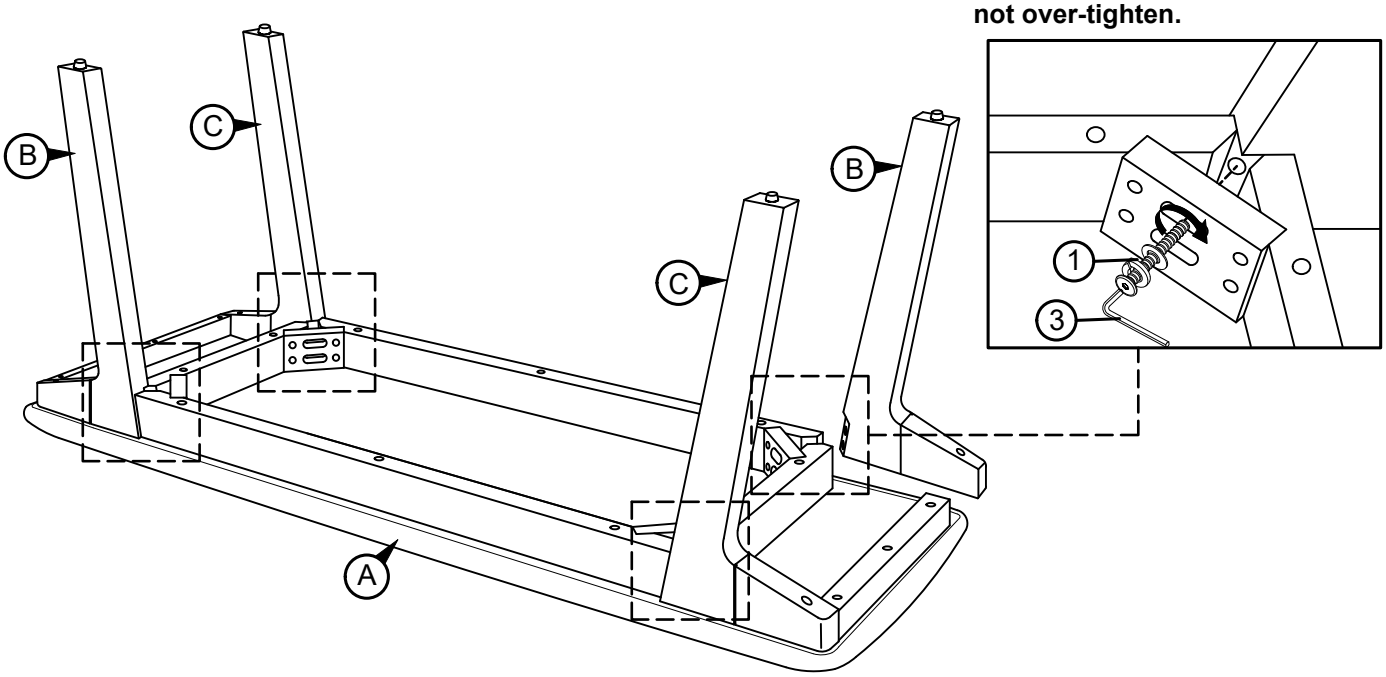

STEP 2

2	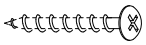 PAN HEAD CB SCREW M4 X 32MM	4PCS

