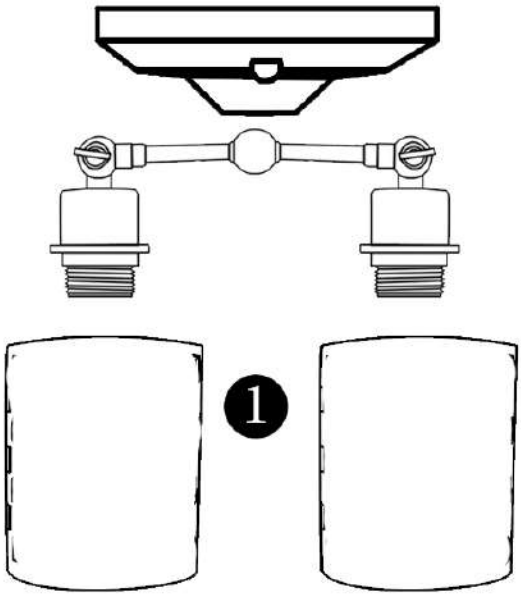
1

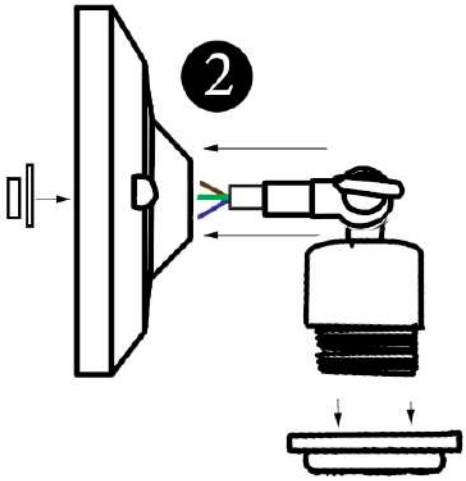
2

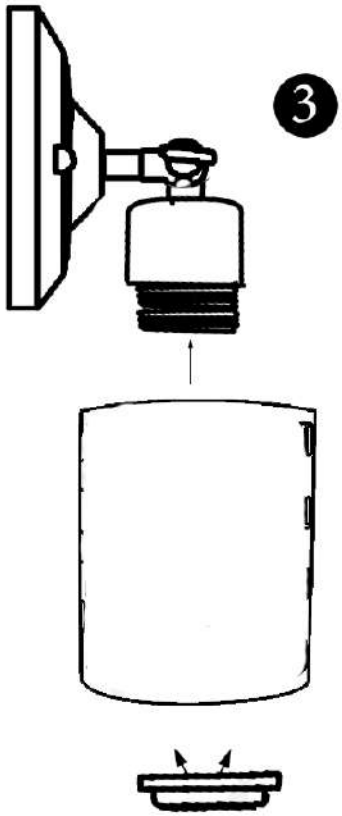
3

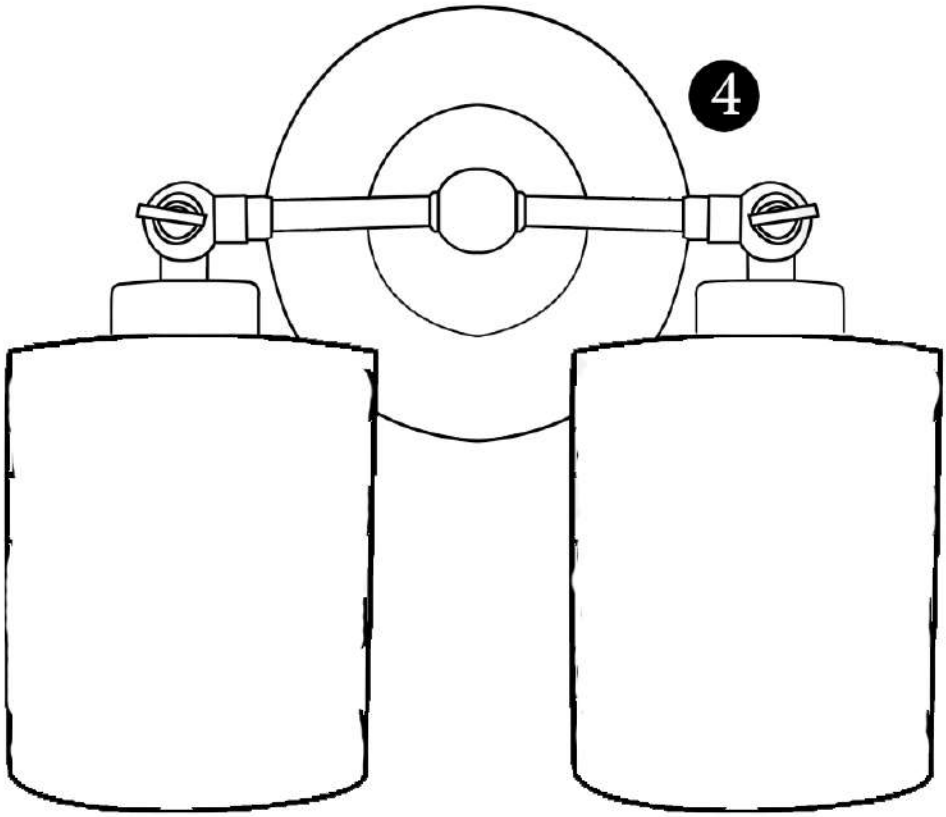
4

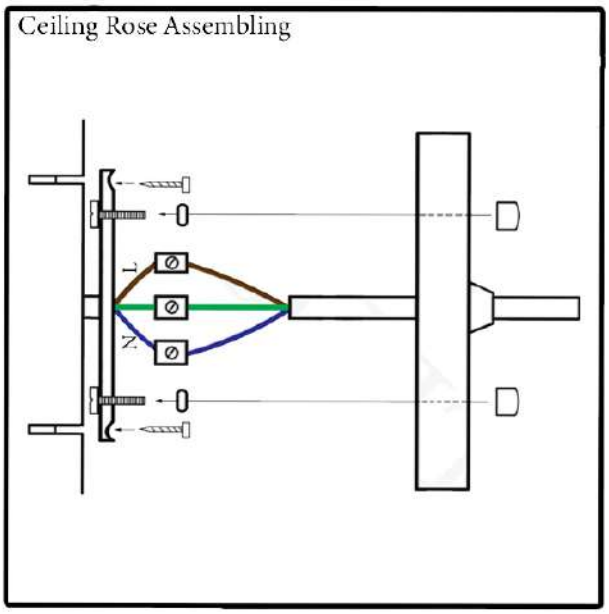
Ceiling Rose Assembling
L
N