Installation Manual

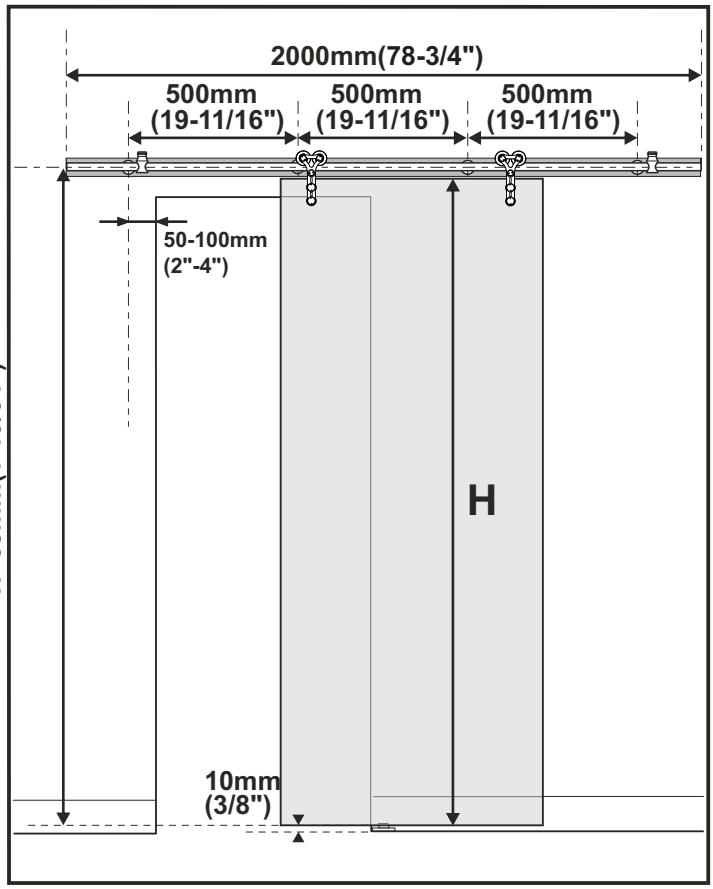

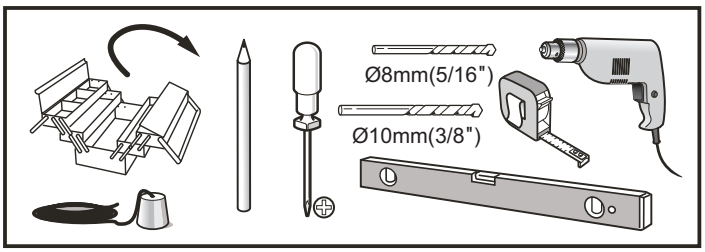

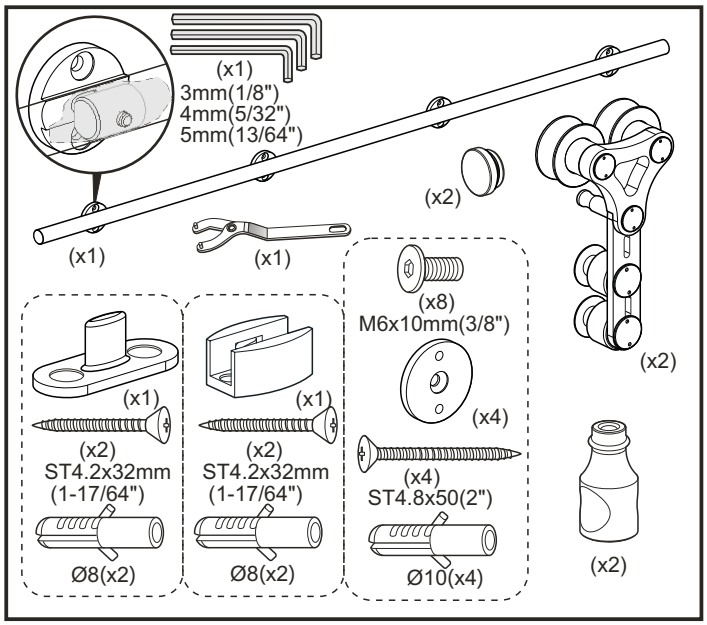

To obtain the maximum weight capacity, all rail mounting fasteners must be mounted directly into solid wood.
Do NOT install directly onto a drywall surface. A solid wood header is recommended as shown in instruction box 2.

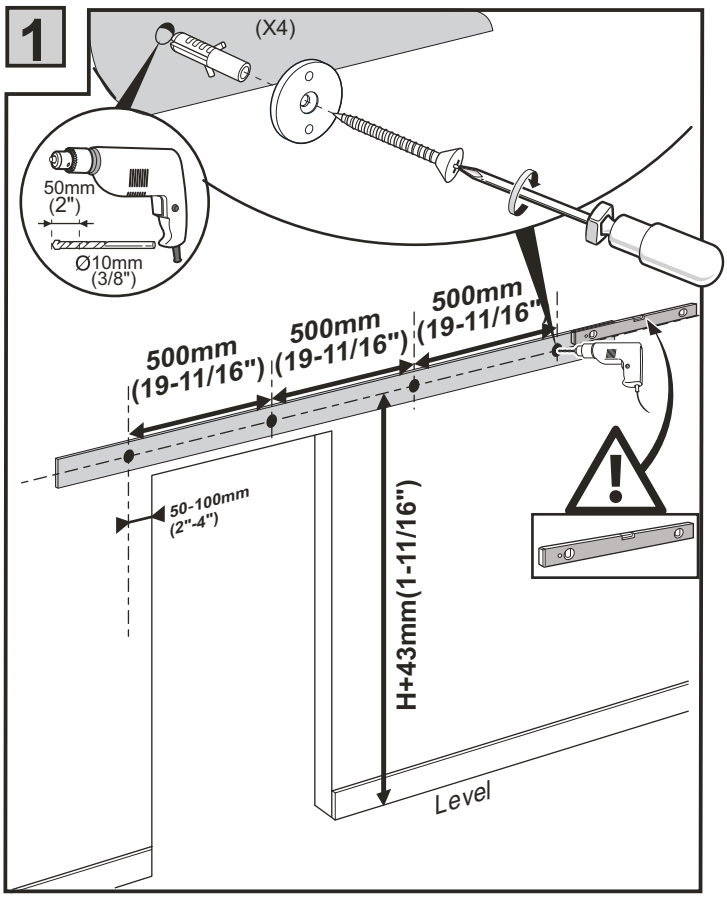

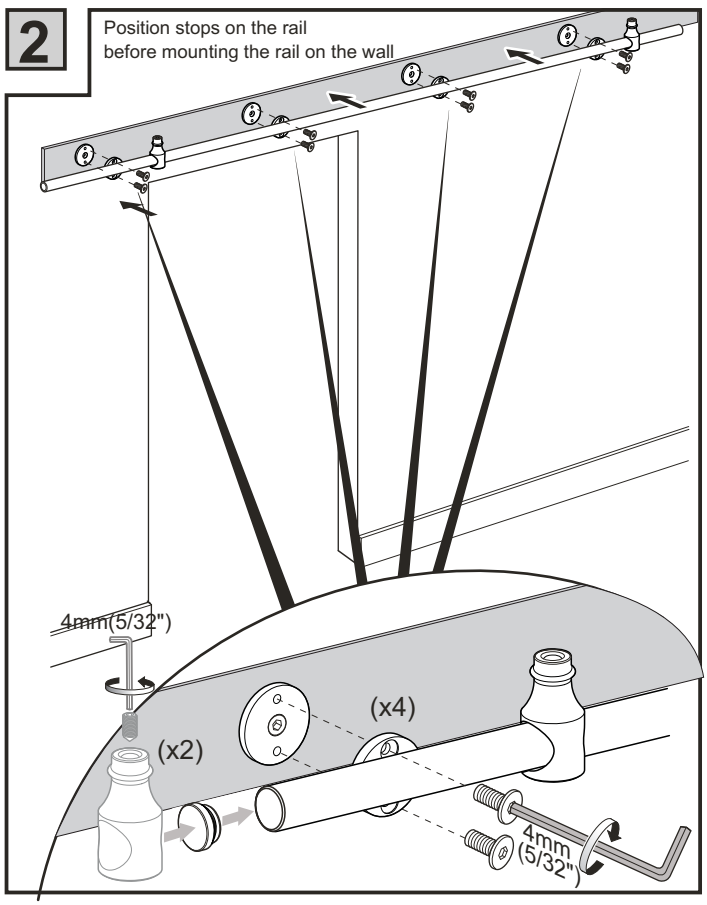

3

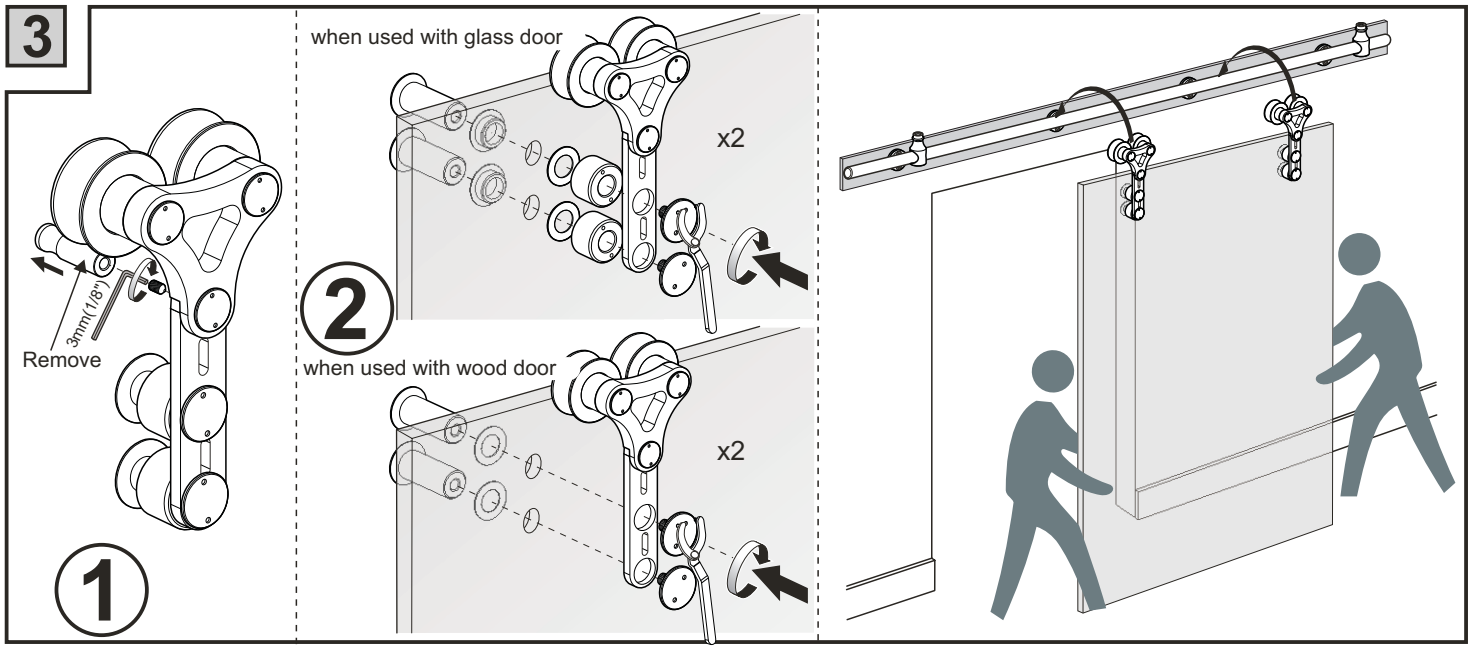
when used with glass door
x2
when used with wood door
x2
3mm(1/8")
Remove
1
2

4

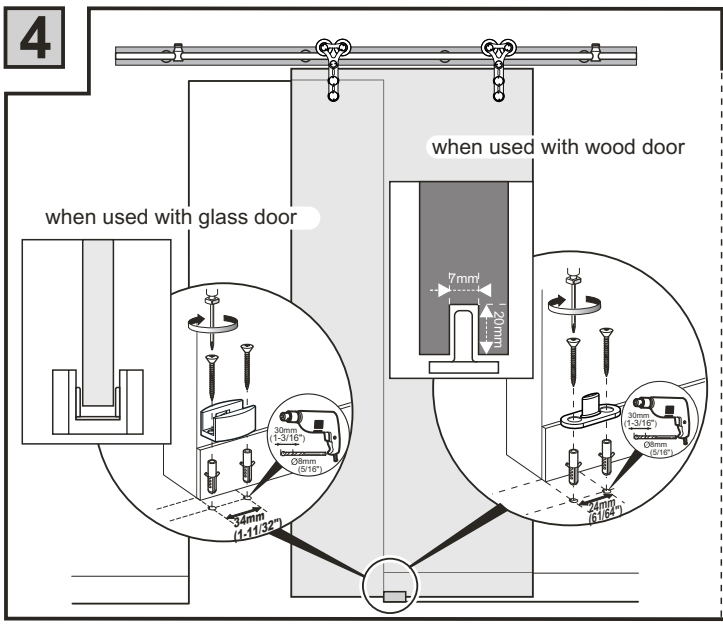
when used with wood door
when used with glass door
7mm
20mm
30mm (1-3/16")
Ø8mm (5/16")
34mm (1-11/32")
30mm (1-3/16")
Ø8mm (5/16")
34mm (61/64")

5

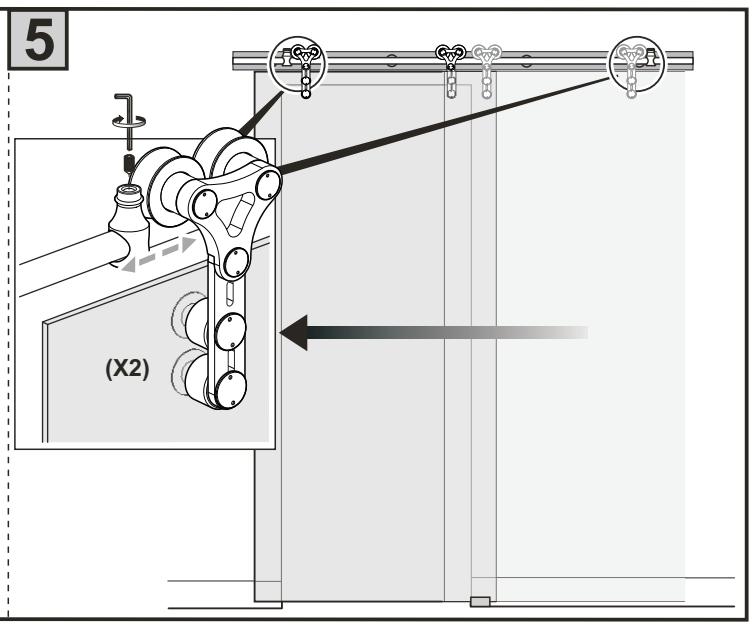
(X2)

6

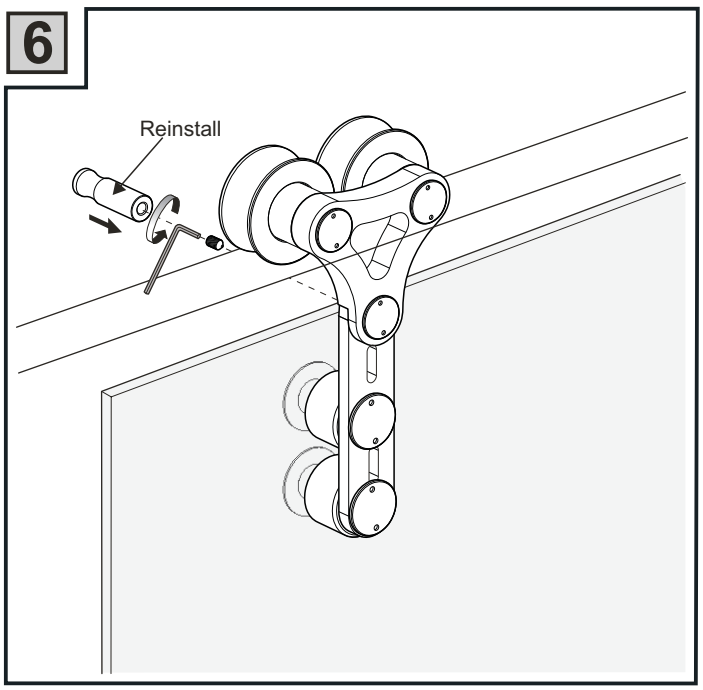
Reinstall

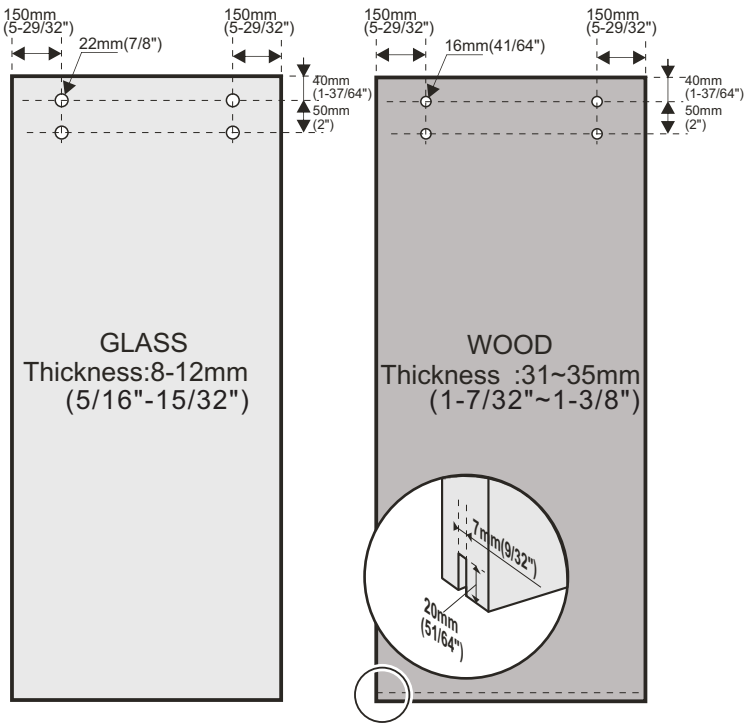
150mm (5-29/32")
22mm(7/8")
40mm (1-37/64")
50mm (2")
GLASS
Thickness:8-12mm
(5/16"-15/32")
150mm (5-29/32")
16mm(41/64")
40mm (1-37/64")
50mm (2")
WOOD
Thickness :31~35mm
(1-7/32"~1-3/8")
7mm(9/32")
20mm (51/64")