Product Installation Instructions

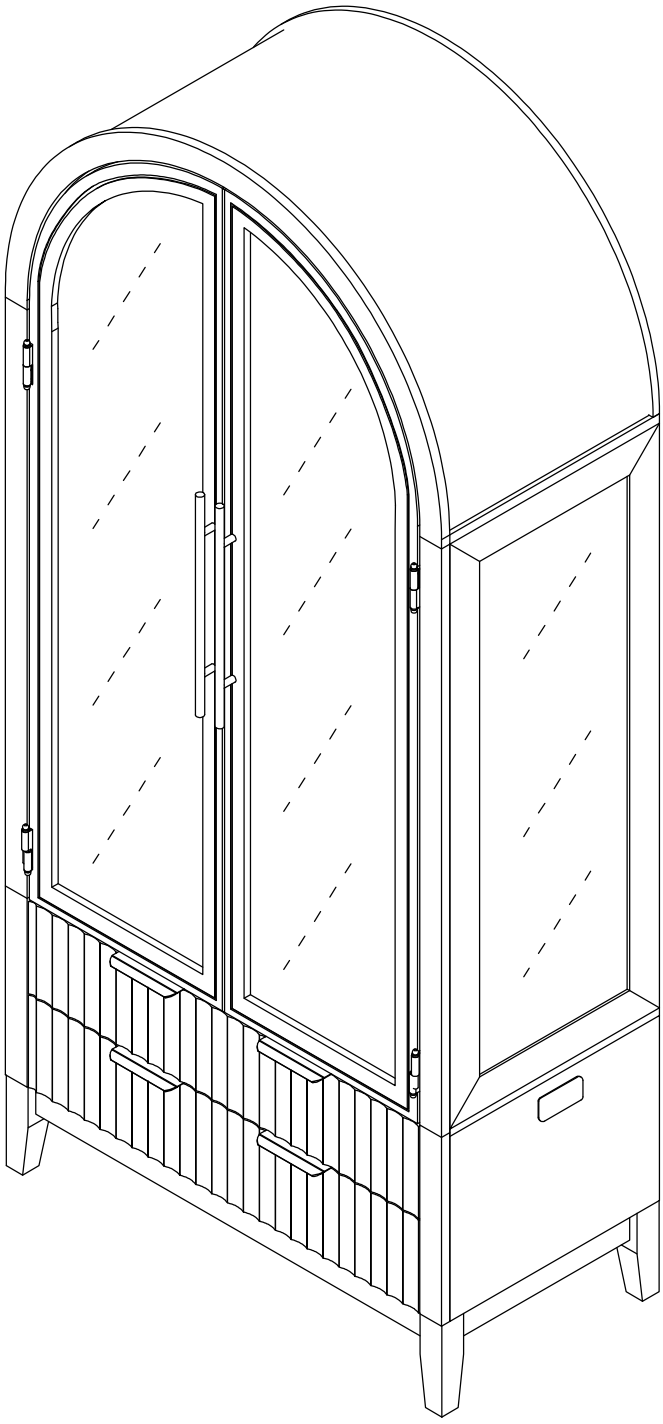

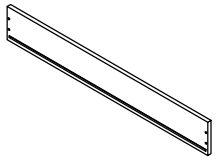

1x2

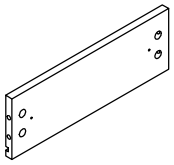

2x4

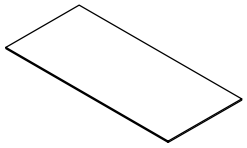

3x2

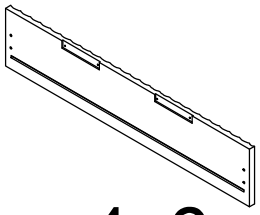

4x2

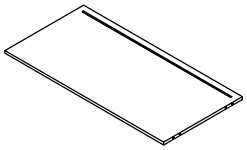

5x1

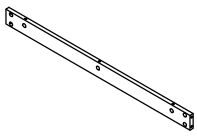

6x2

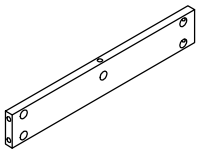

7x2

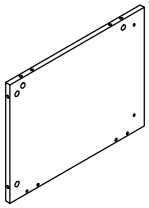

8x1

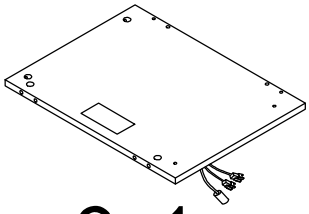

9x1

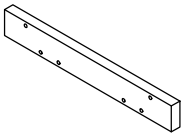

10x1

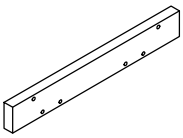

11x1

12x1

13x1

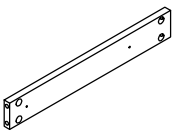

14x4

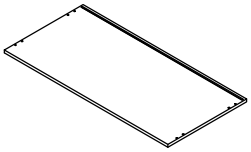

15x1

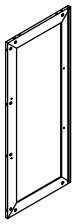

16x2

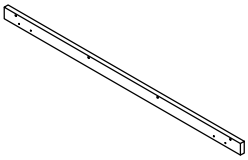

17x1

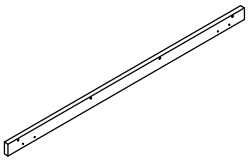

18x1

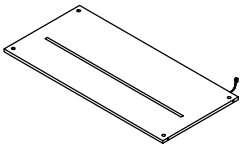

19x2

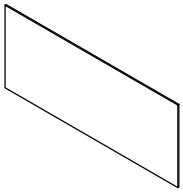

20x1

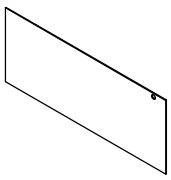

21x2

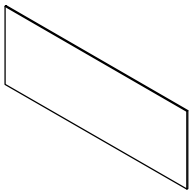

22x1

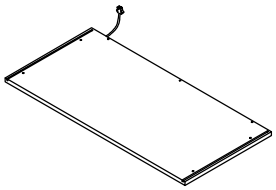

23x1

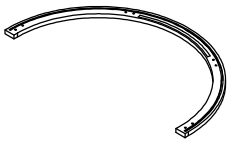

24x1

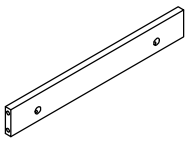

25x2

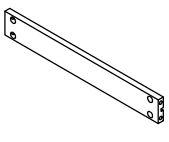

26x1

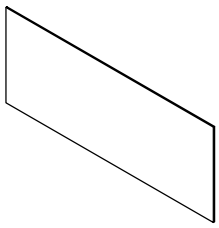

27x1

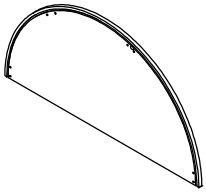

28x1

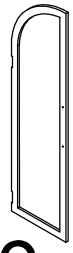

29x1

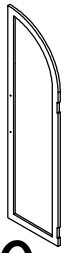

30x1

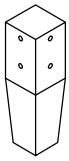

31x4

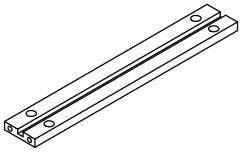

32x1

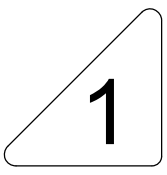

Accessories list

A	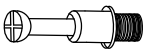	Two in one screw (6x28mm)	119pcs +6pcs
B		Two in one nut (10x12mm)	119pcs +6pcs
C	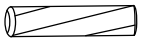	Wood chipping (6x30mm)	16pcs +4pcs
D	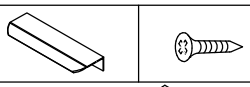	Handle & Screw (3x12mm)	4pcs / 8pcs +2pcs
E	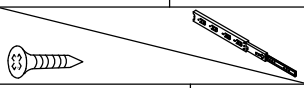	Screw & Guide (3x12mm)	20pcs +4pcs / 4pcs
F	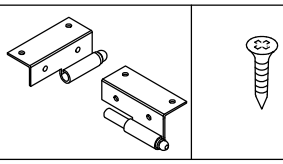	Hinge & Screw (3.5x12mm)	2pcs / 16pcs +2pcs
G		Adjuster foot	4pcs
H	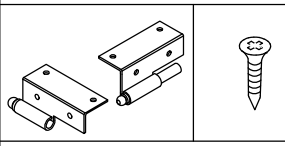	Hinge & Screw (3.5x12mm)	2pcs / 16pcs +2pcs
I		Wire	1pcs
J		Sticker (ϕ 20mm)	1pcs / 4pcs +2pcs
K	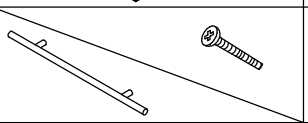	Arch handle & Screw (4x22mm)	4pcs / 2pcs
L	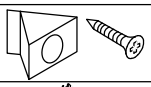	Fixing Clip & Screw (3x16mm)	16pcs +1pcs
M	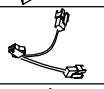	Forked line	2pcs
N	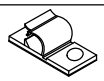	Wire Clamp	5pcs +1pcs
O	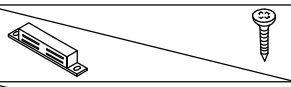	Door Magnet & Screw (3x12mm)	2pcs +1pcs / 1pcs
P	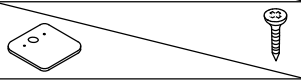	Iron Sheet & Screw (3x10mm)	2pcs +1pcs / 2pcs
Q	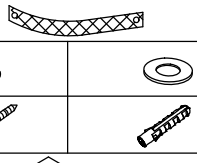	anti-tipping tape Screw & gasket (3.5x14mm) Screw (4x45mm)	1pcs 1pcs / 2pcs 1pcs / 1pcs
	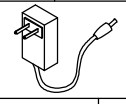	AC/DC Adapter (12V⎓3.0A)	1pcs
R	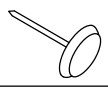	4pcs	

Double-head screwdriver, use as required

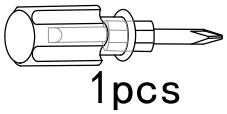

1pcs

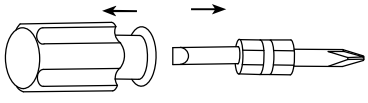

Product structure decomposition

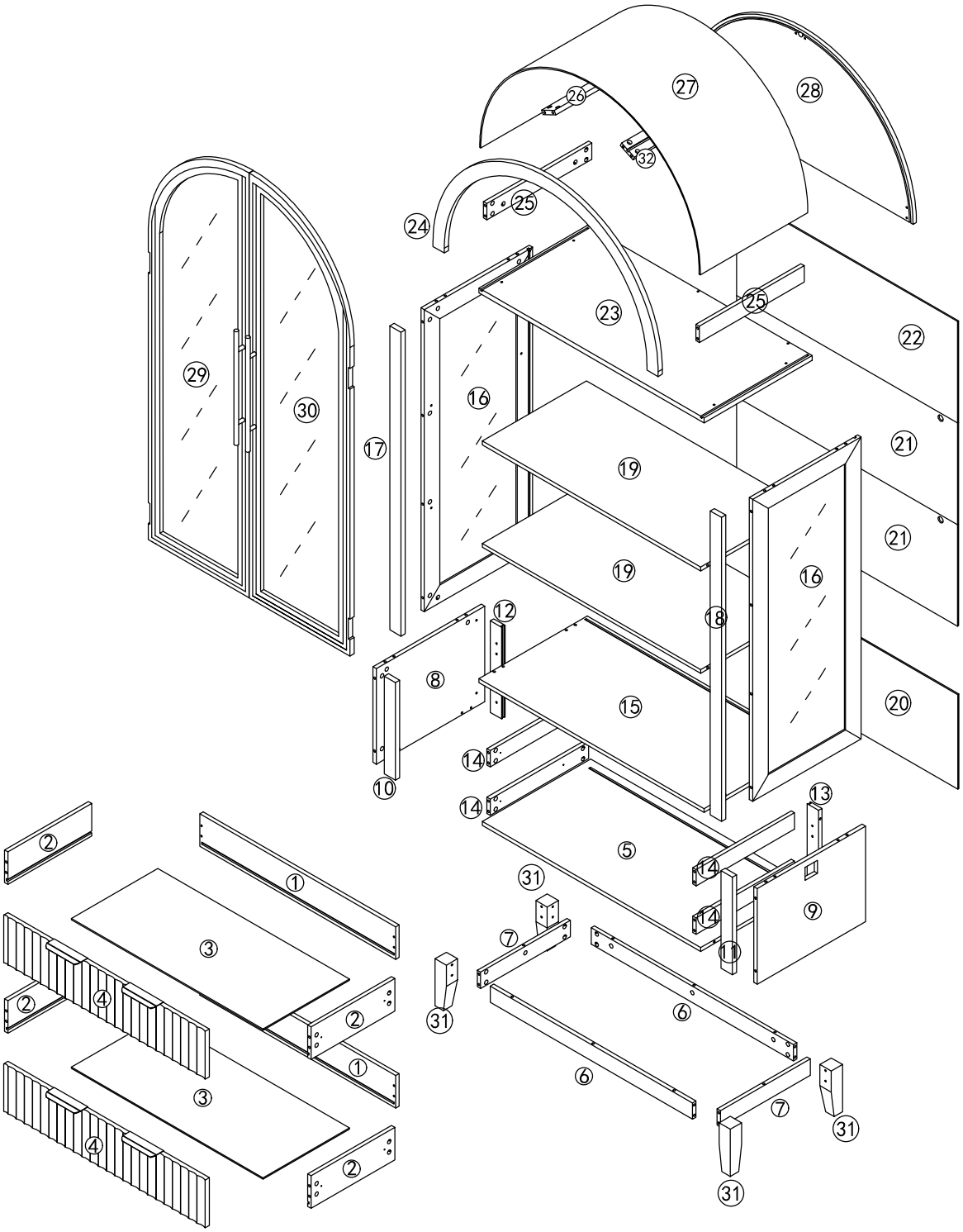

A	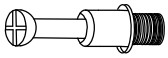	16pcs	B		16pcs	D	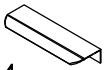 4pcs	8pcs
E	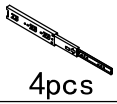 4pcs	8pcs						

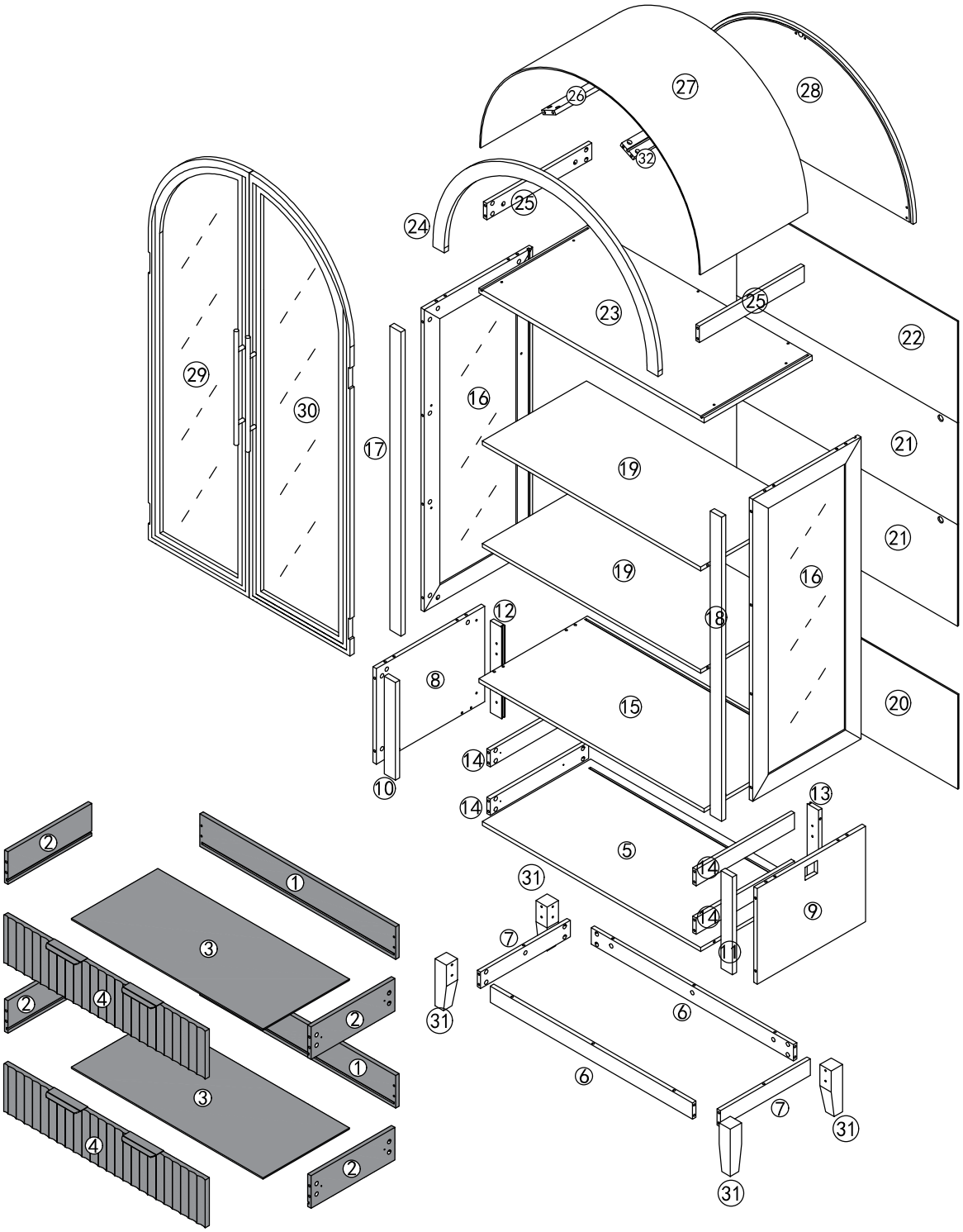

Use parts A and B

Step1

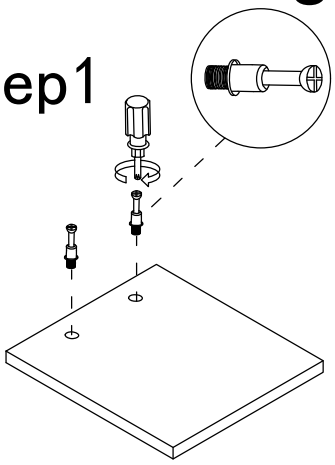

Step2

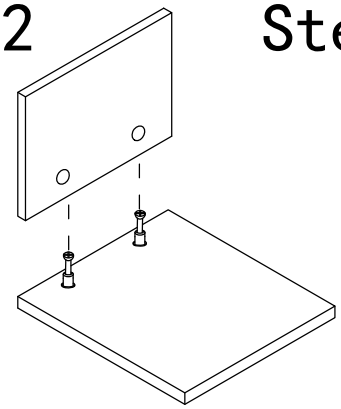

Step3

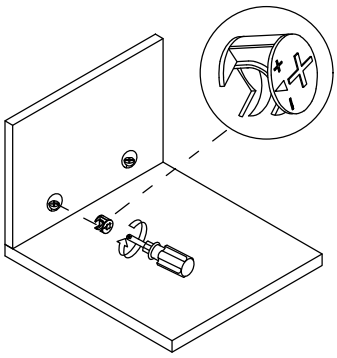

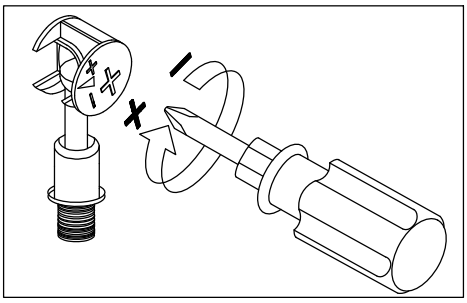

Use a screwdriver to lock in the direction of the "+" sign

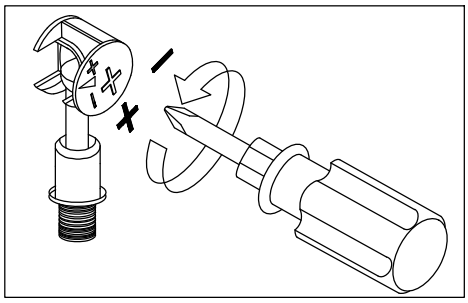

Disassemble along the direction of "-" sign

Step 1

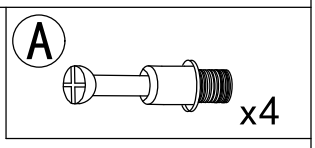

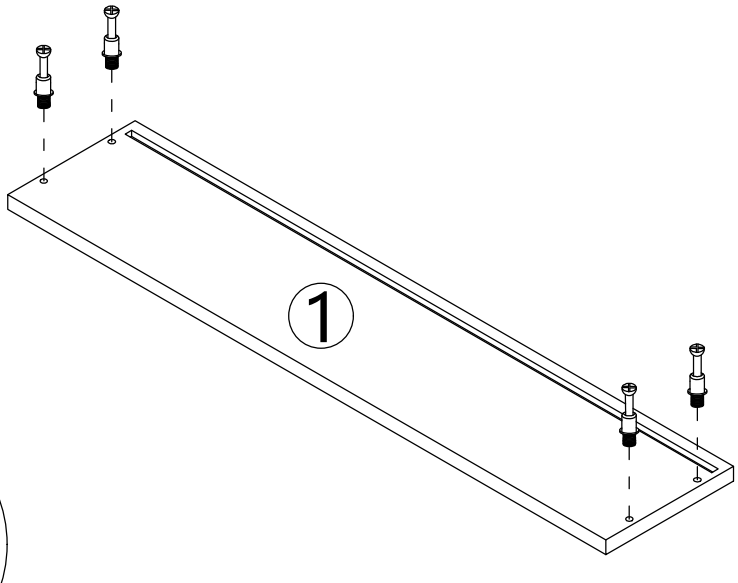

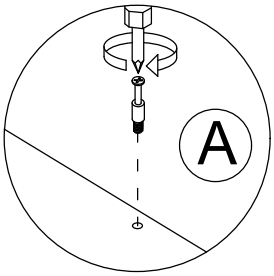

Step 2

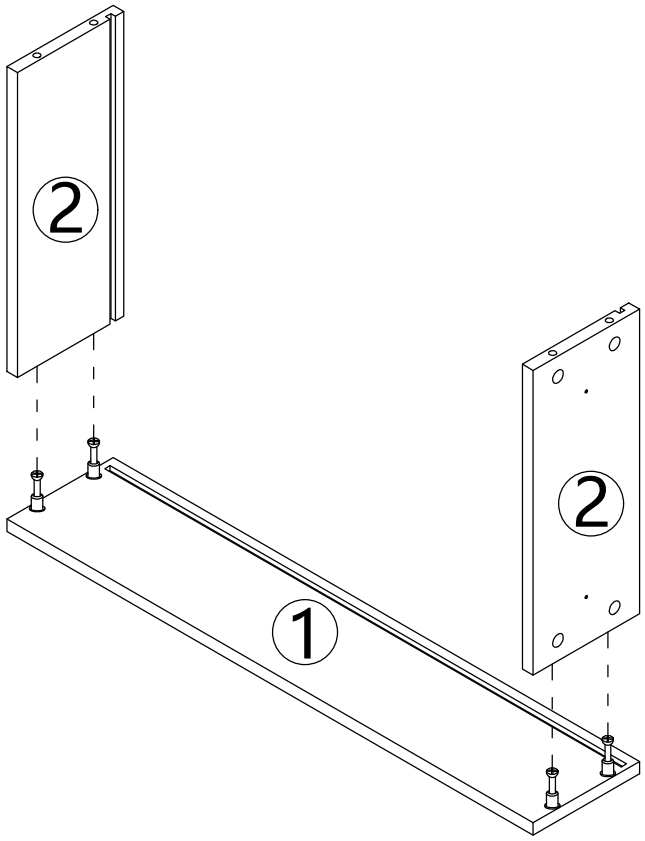

Step 3

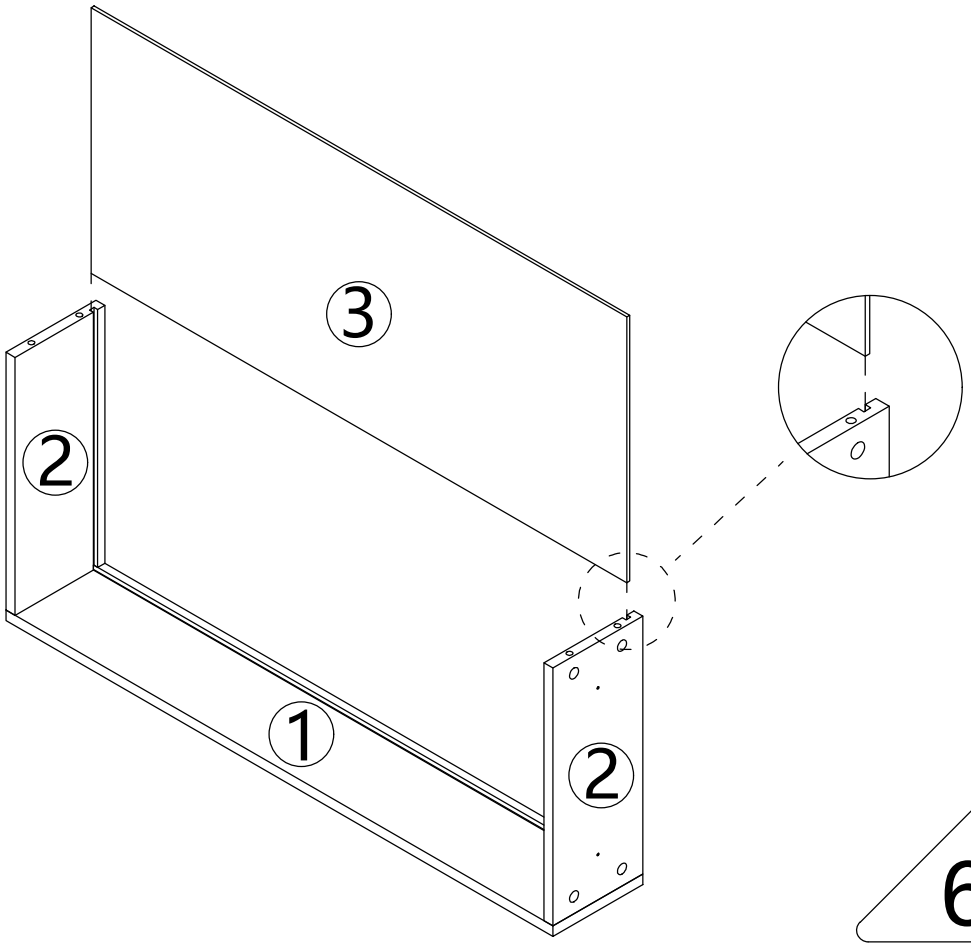

Step 4

A x4

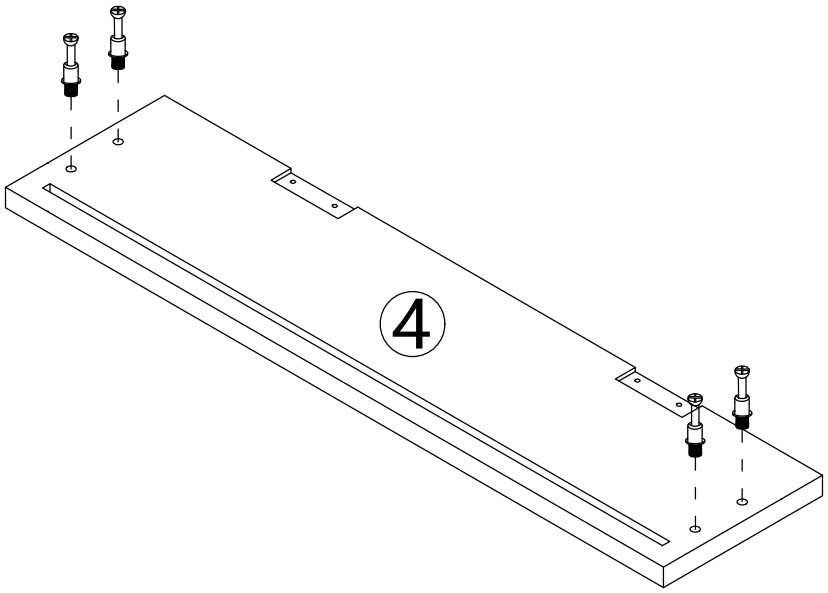

Step 5

B x8

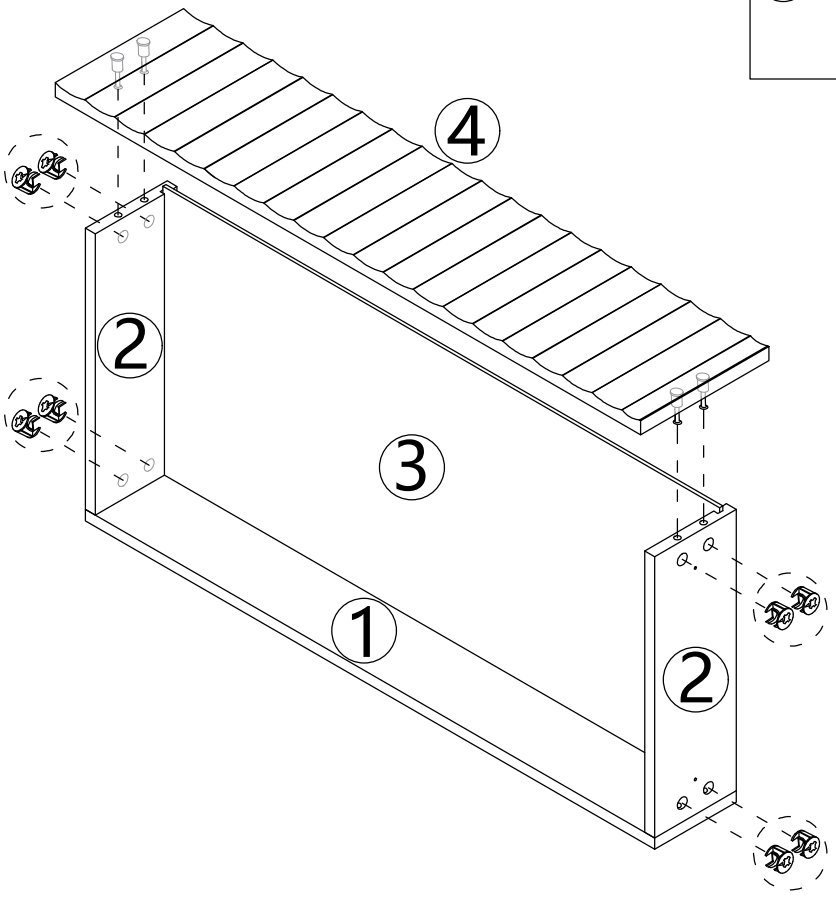

Drawer rail breakdown diagram

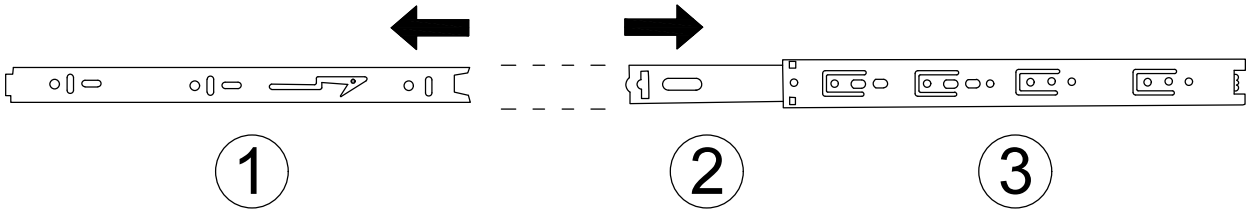

① Dismantle the schematic diagram

Step 1 : Pull the rails apart

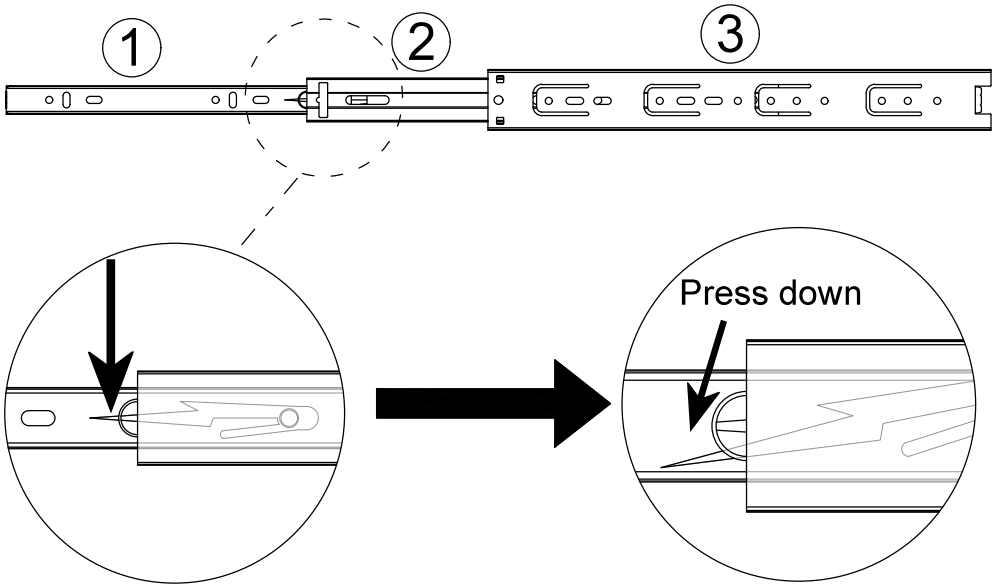

Step 2 : Press the nylon button and pull out ①.

Drawer rail decomposition completed schematic diagram

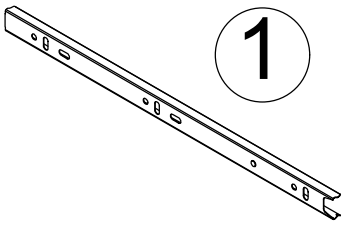

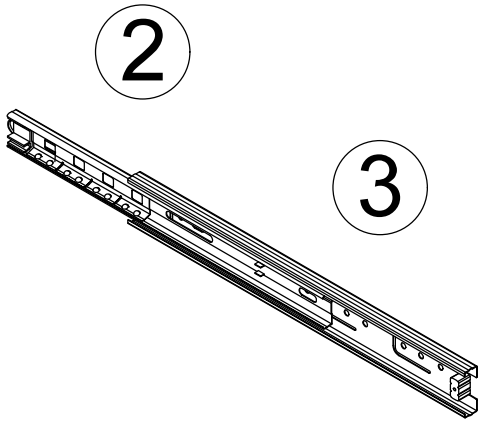

Step 6

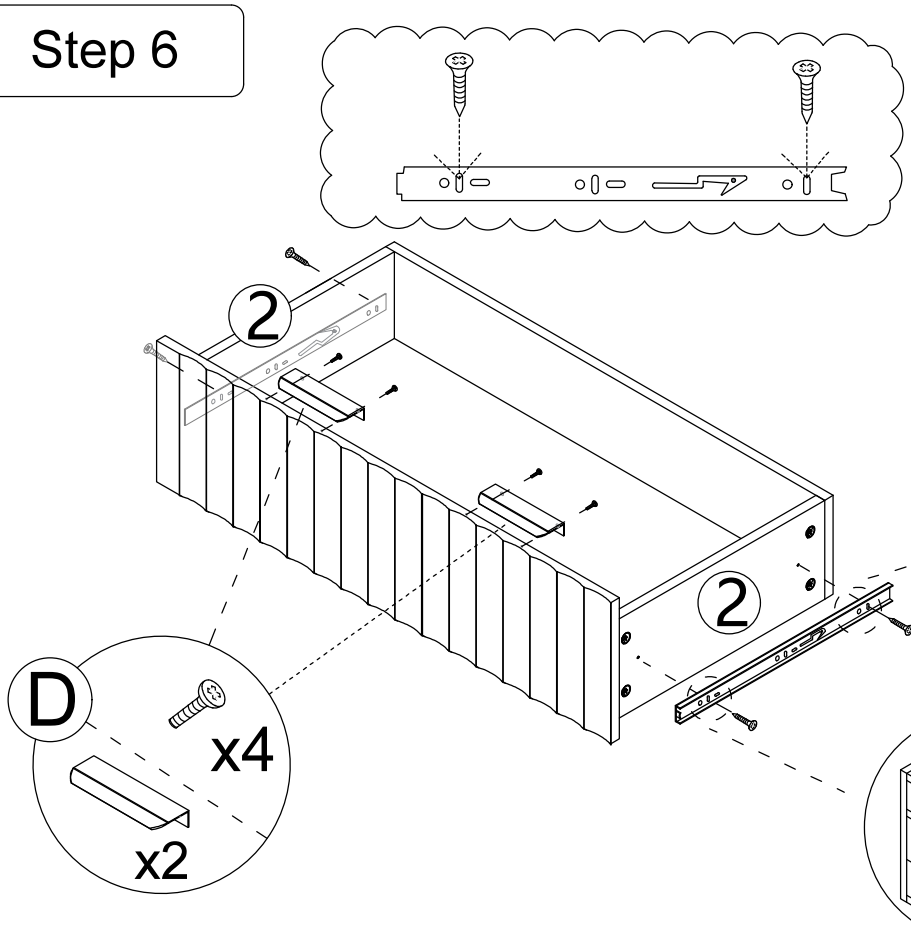

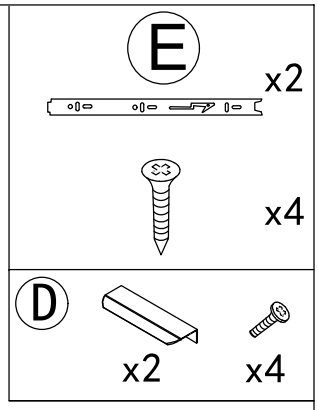

Step 7

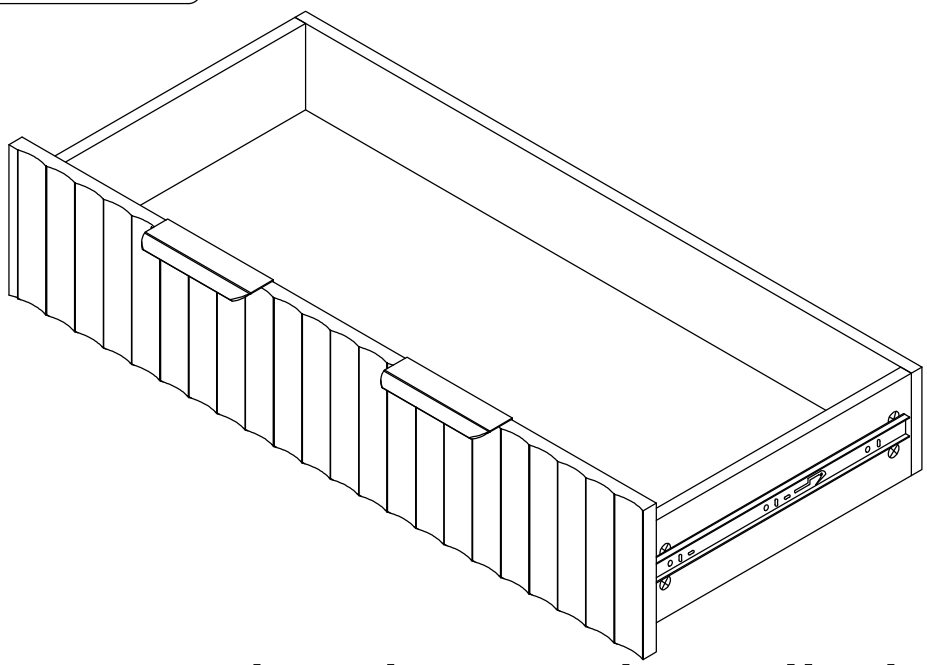

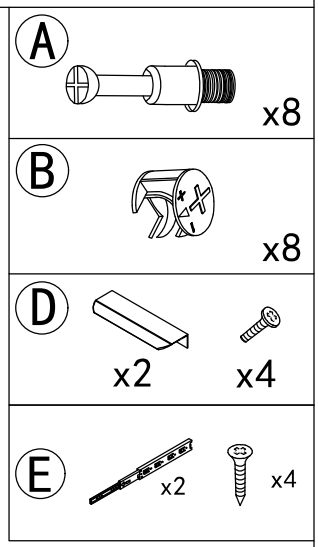

x2

Repeat the drawer installation steps

A	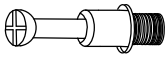	103pcs	B		103pcs	C	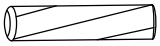	16pcs
E	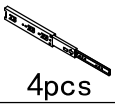 4pcs	12pcs	F	4pcs	16pcs	G		4pcs
H	4pcs	16pcs	I		1pcs	J	1pcs	4pcs
O	1pcs	2pcs						

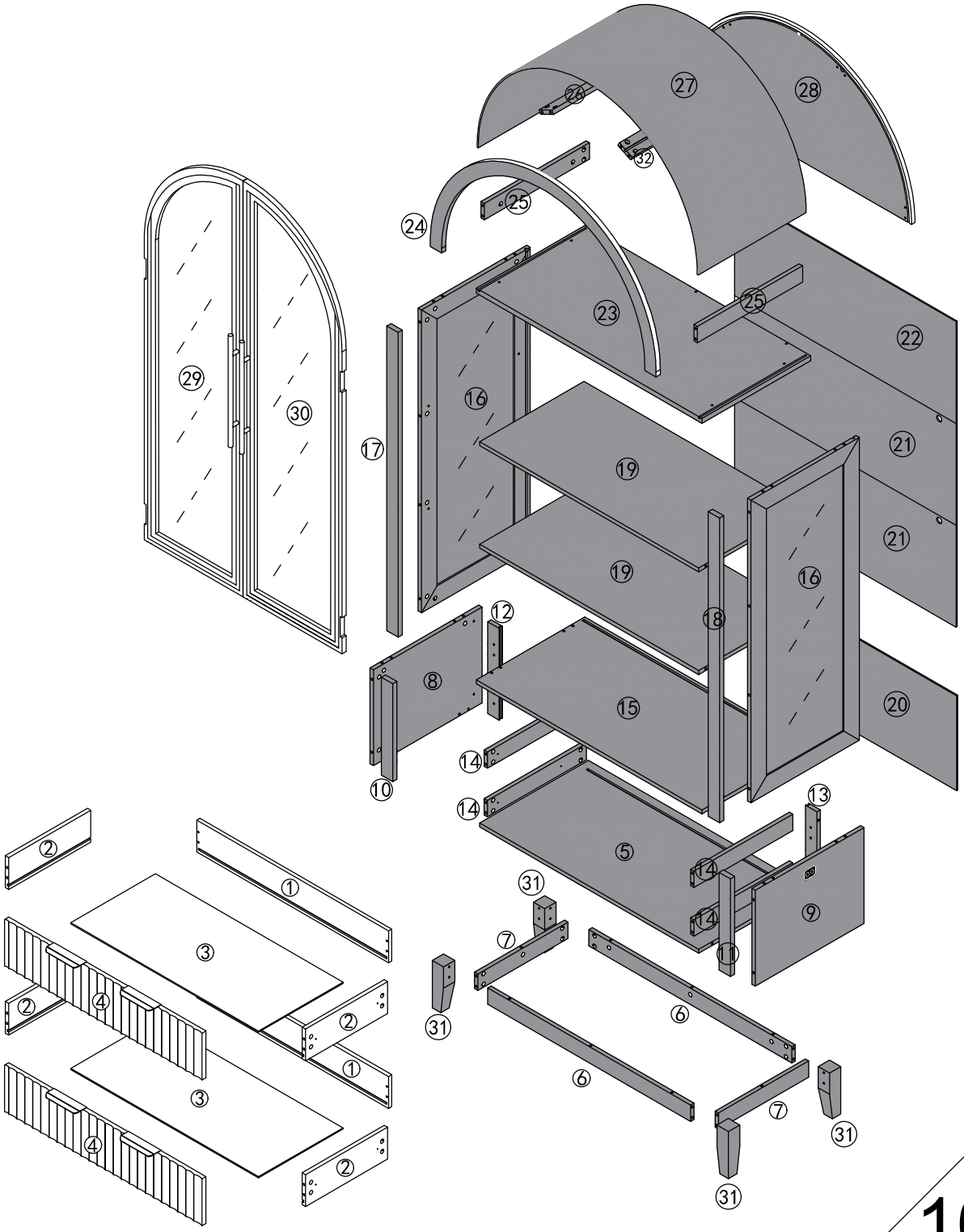

Step 8

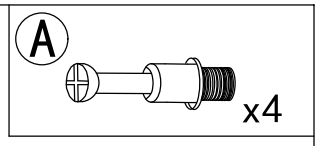

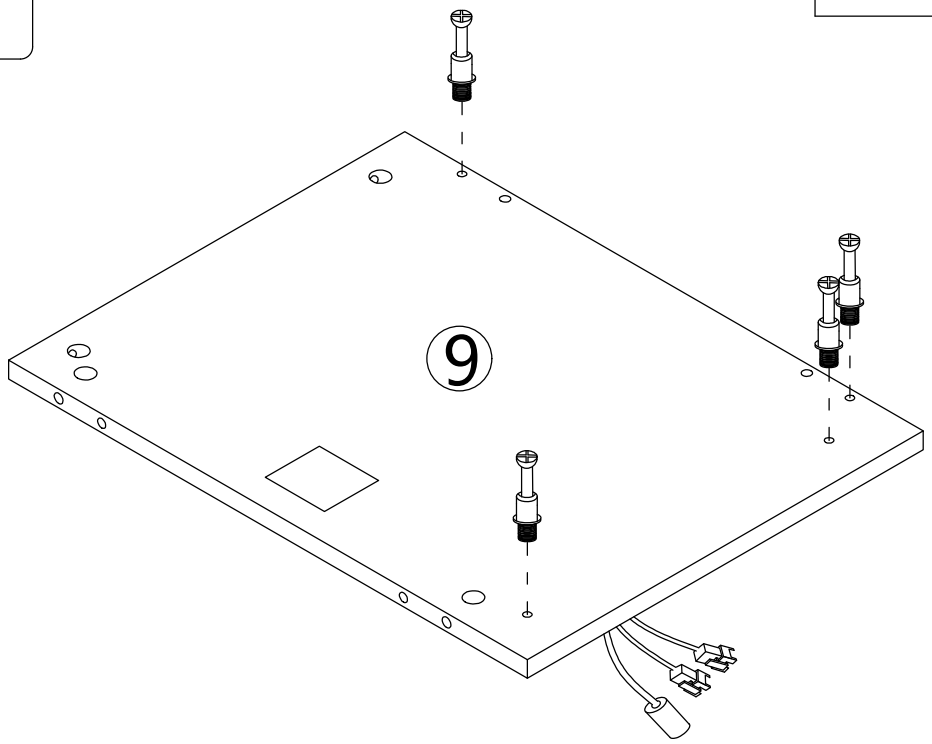

Step 9

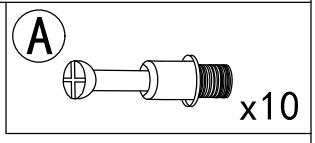

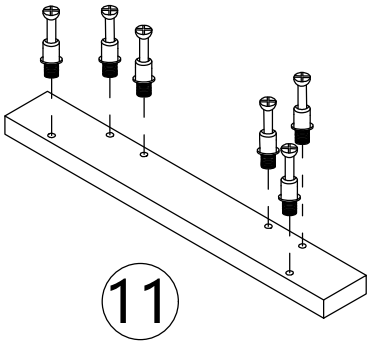

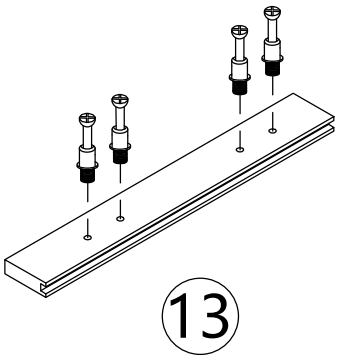

Step 10

B x2

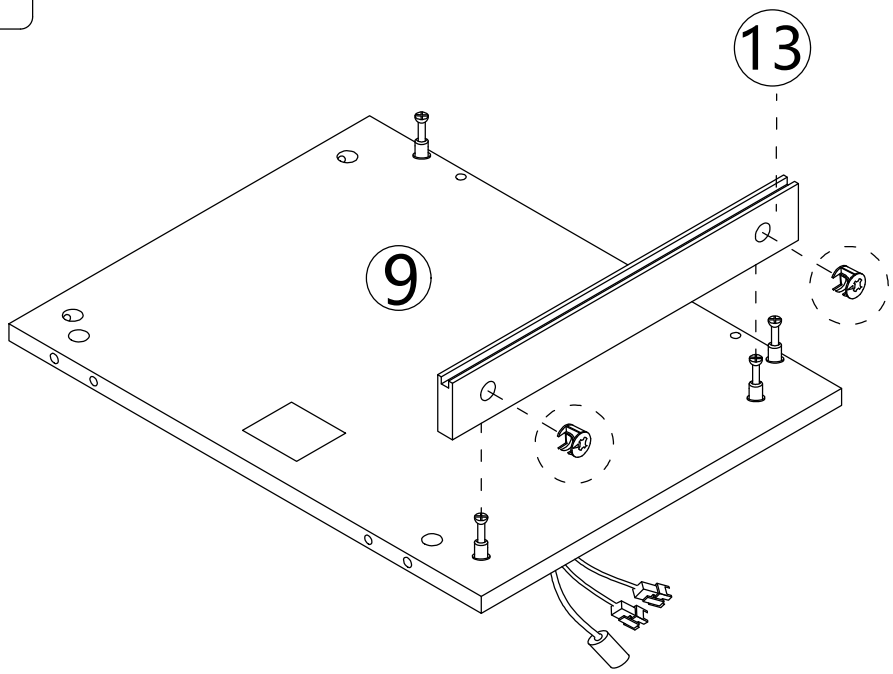

Step 11

B x4

Note: The guiding hole here is relatively close to the edge.

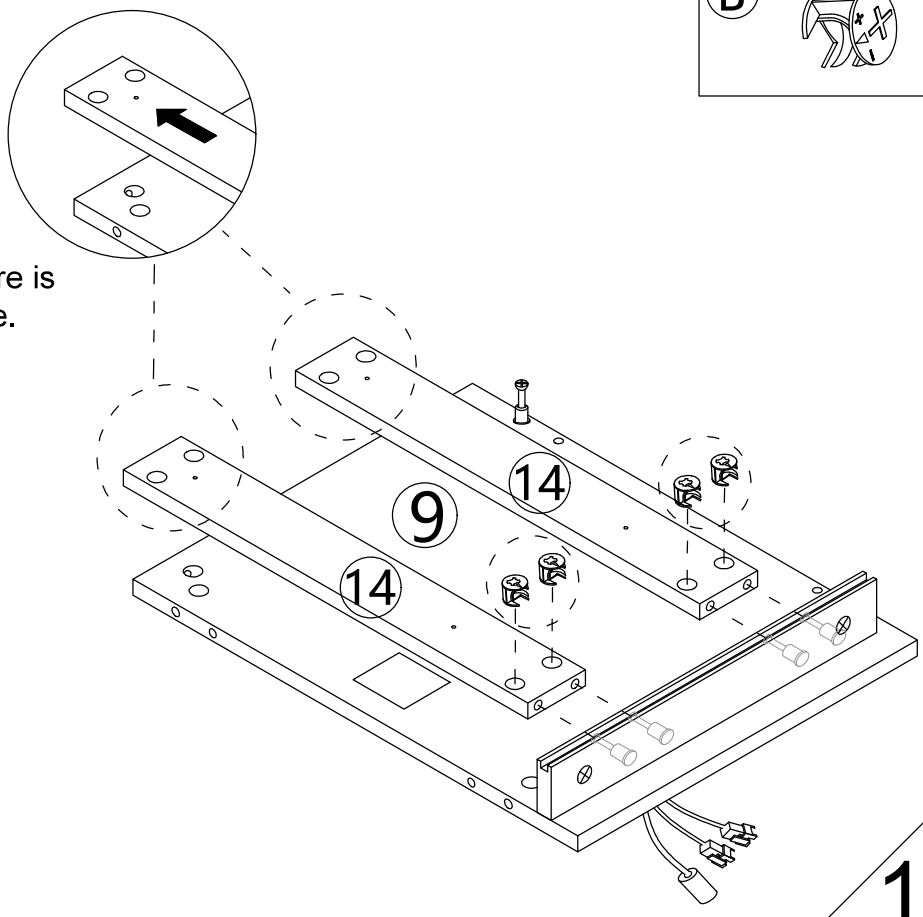

Step 12

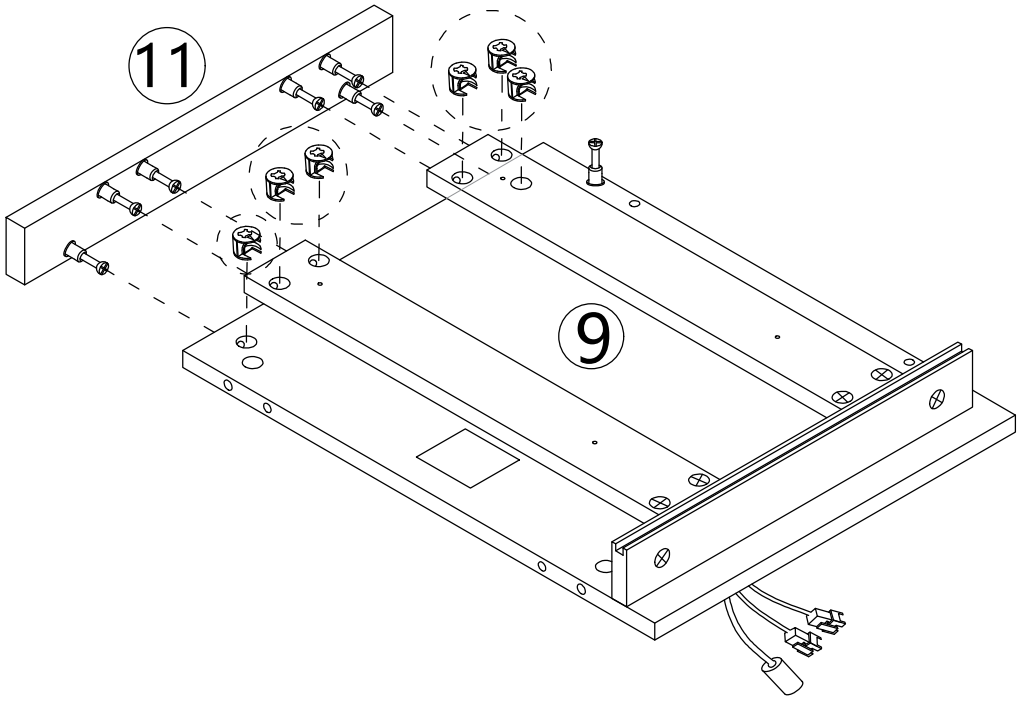

Step 13

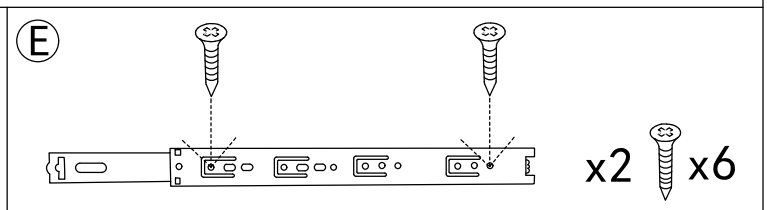

This hole is for strengthening fixed hole customers can choose to install according to their needs.

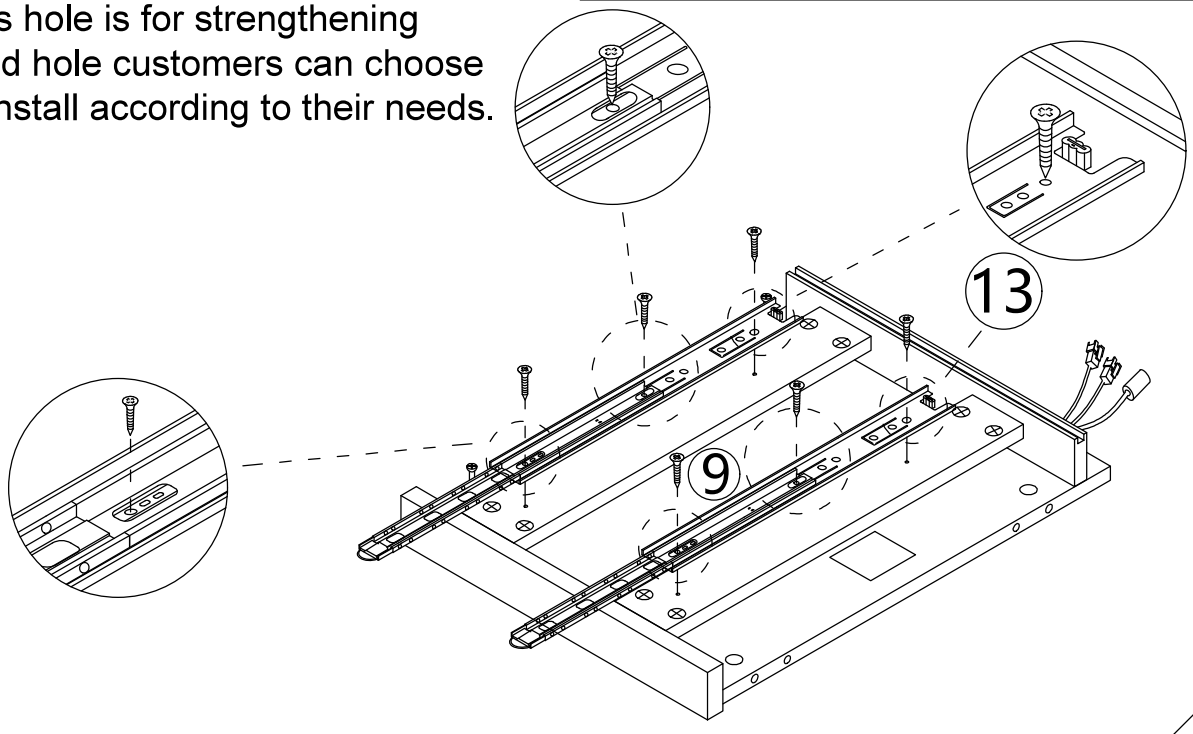

Step 14

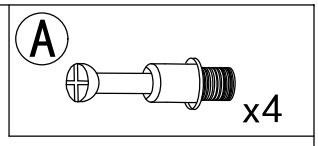

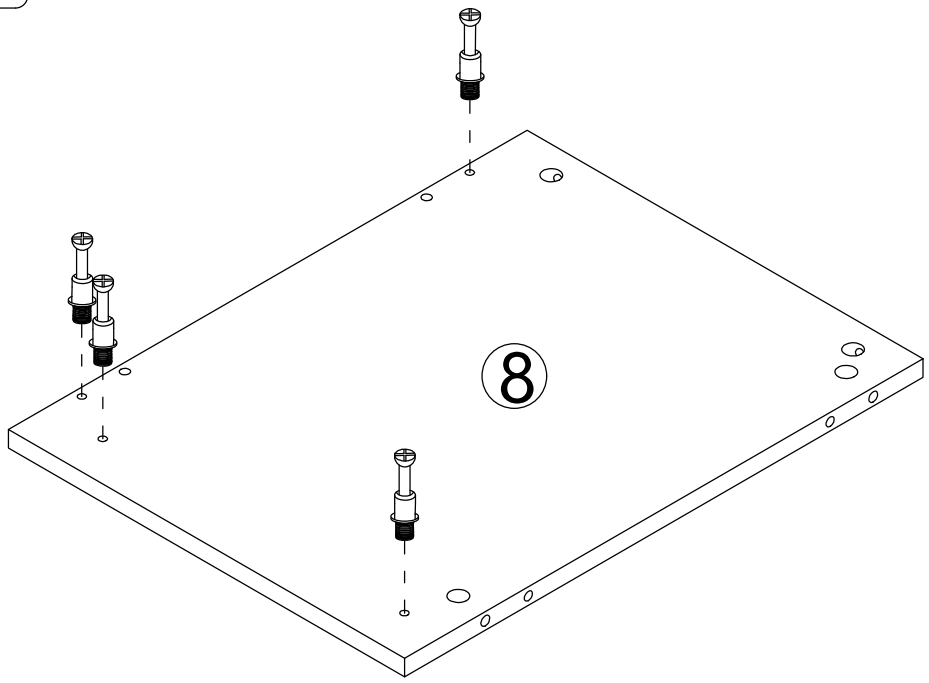

Step 15

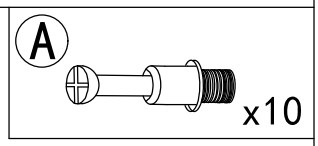

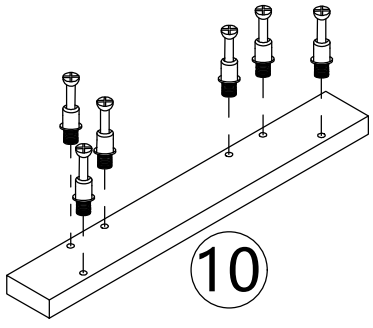

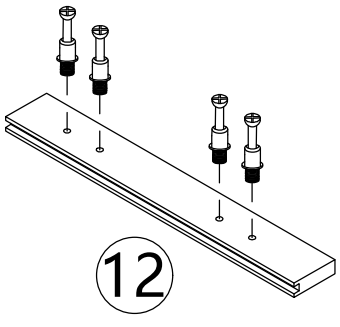

B x2

Step 16

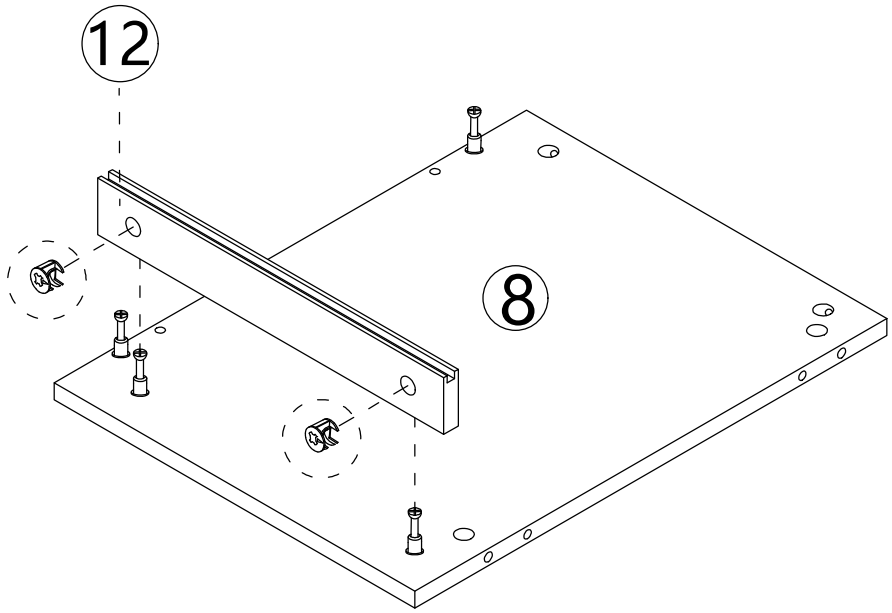

B x4

Step 17

Note: The guiding hole here is relatively close to the edge.

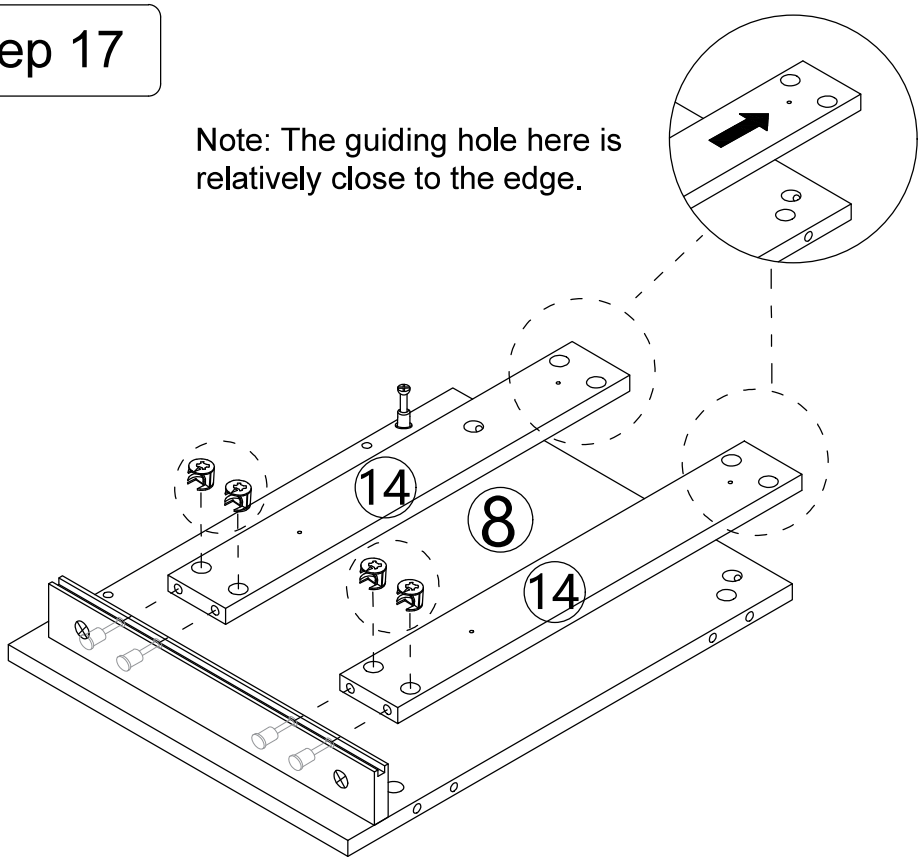

Step 18

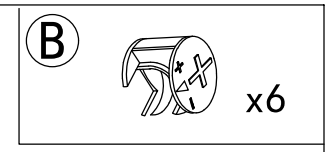

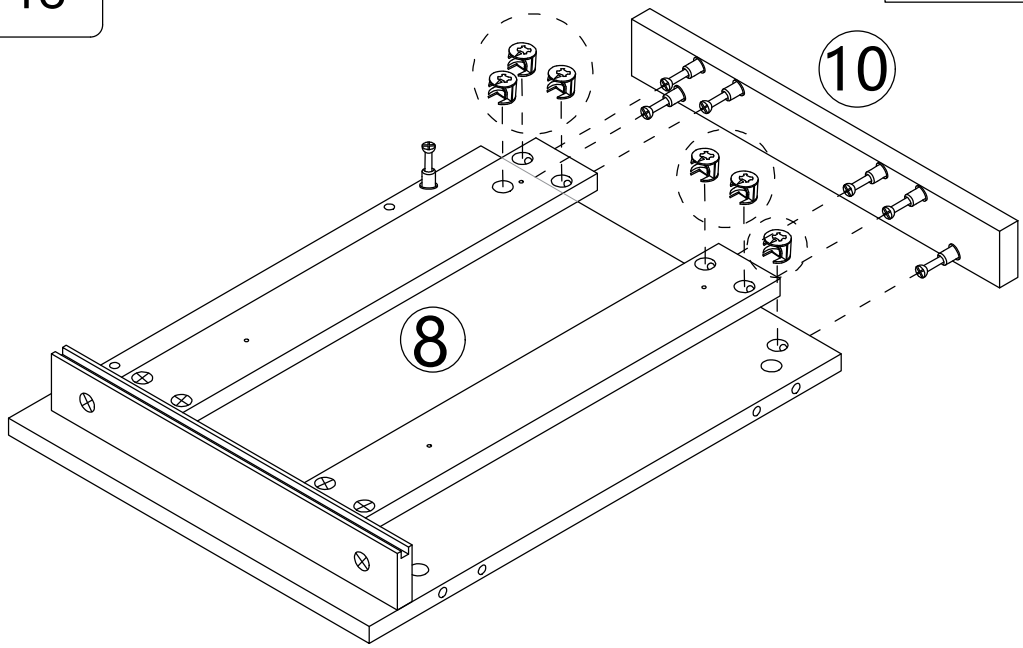

Step 19

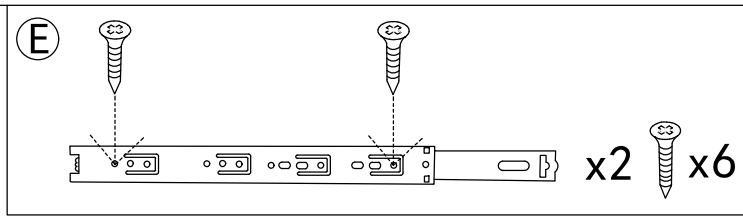

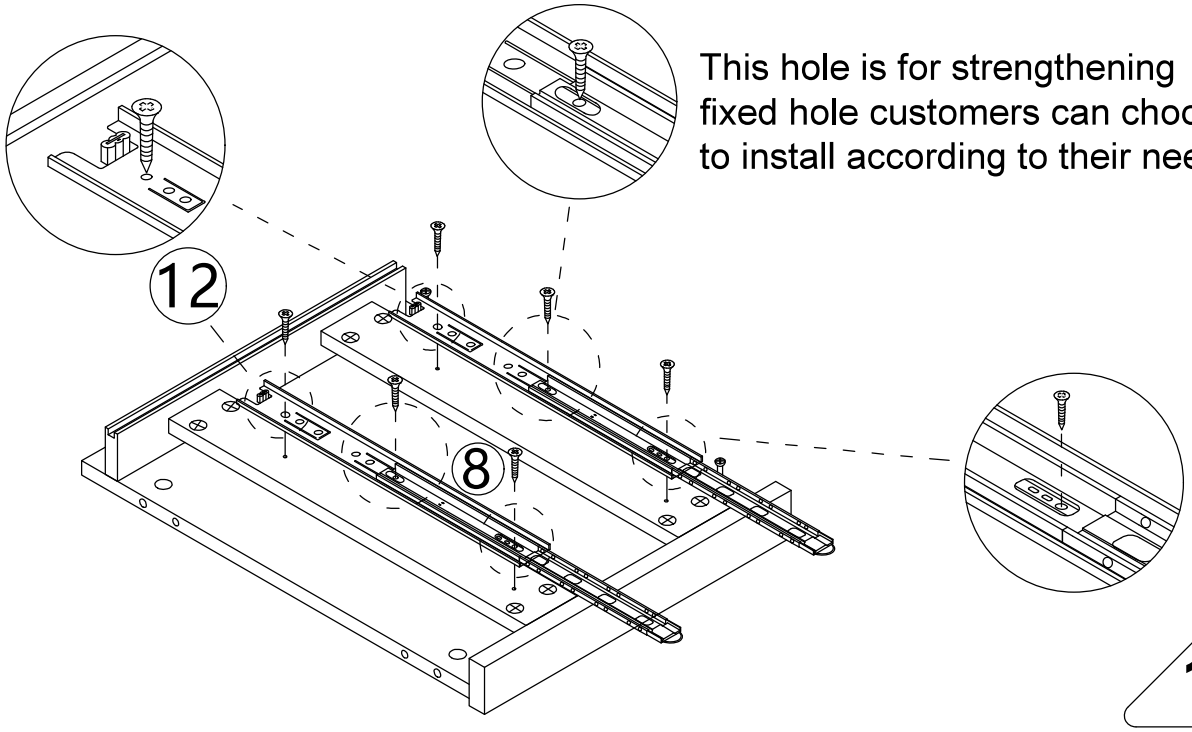

This hole is for strengthening fixed hole customers can choose to install according to their needs.

C

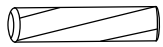

x4

Step 20

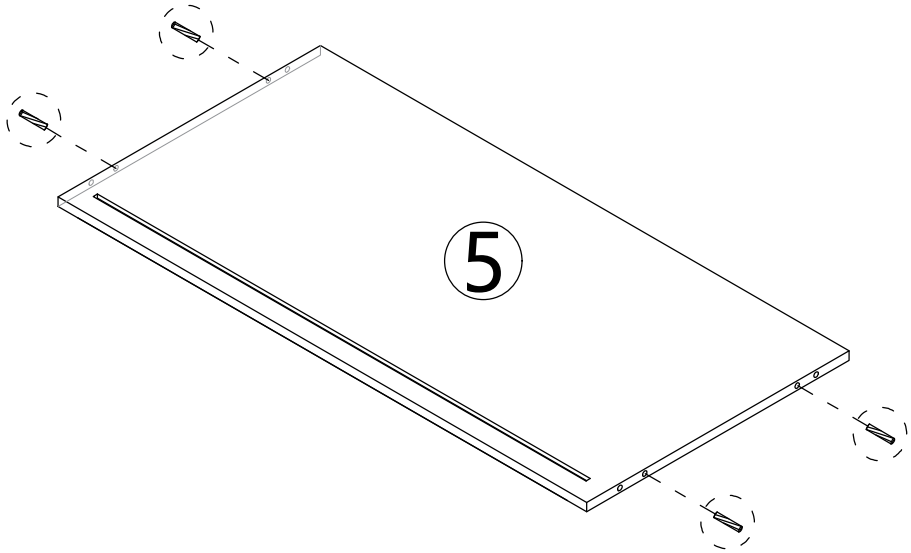

B

x4

Step 21

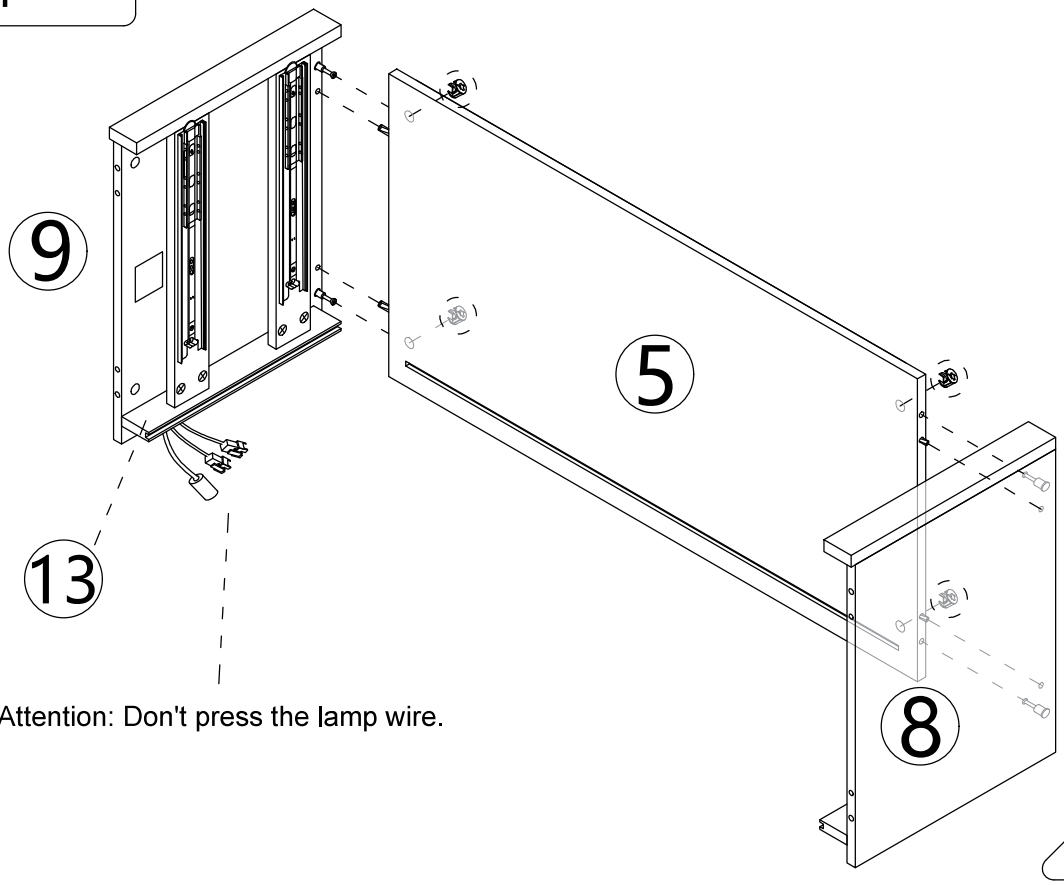

Attention: Don't press the lamp wire.

Step 22

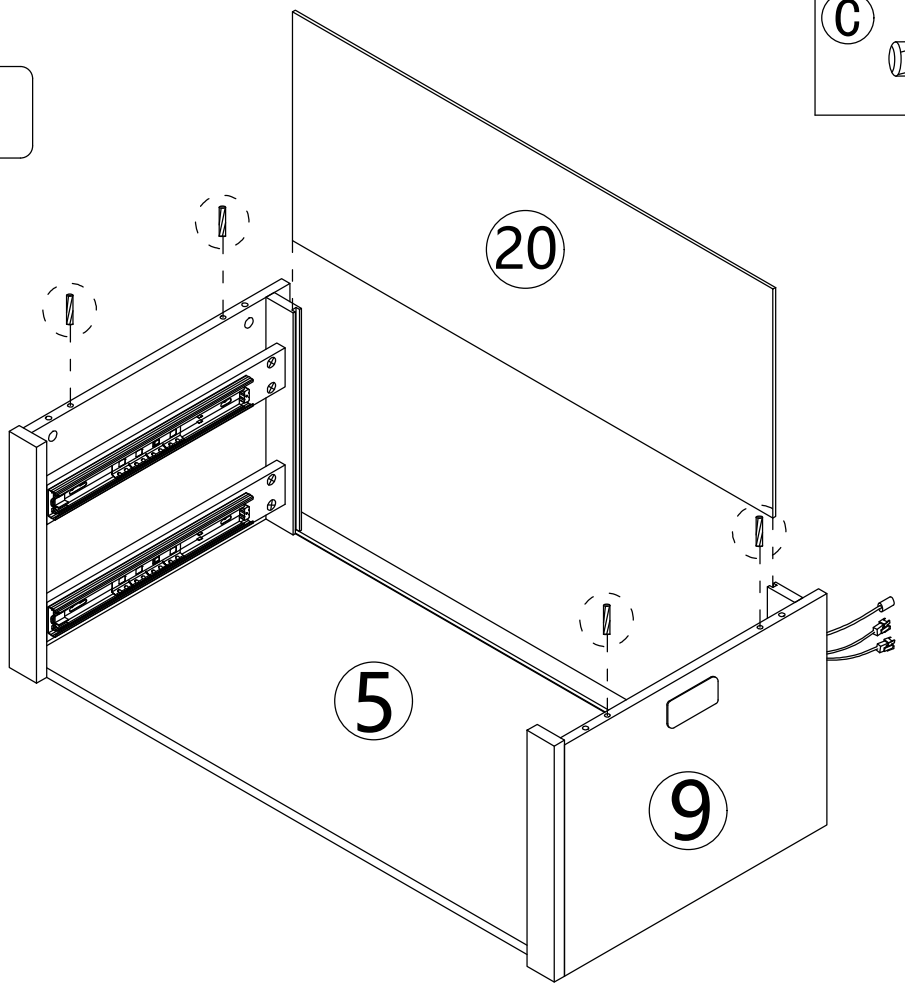

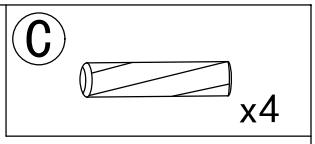

Step 23

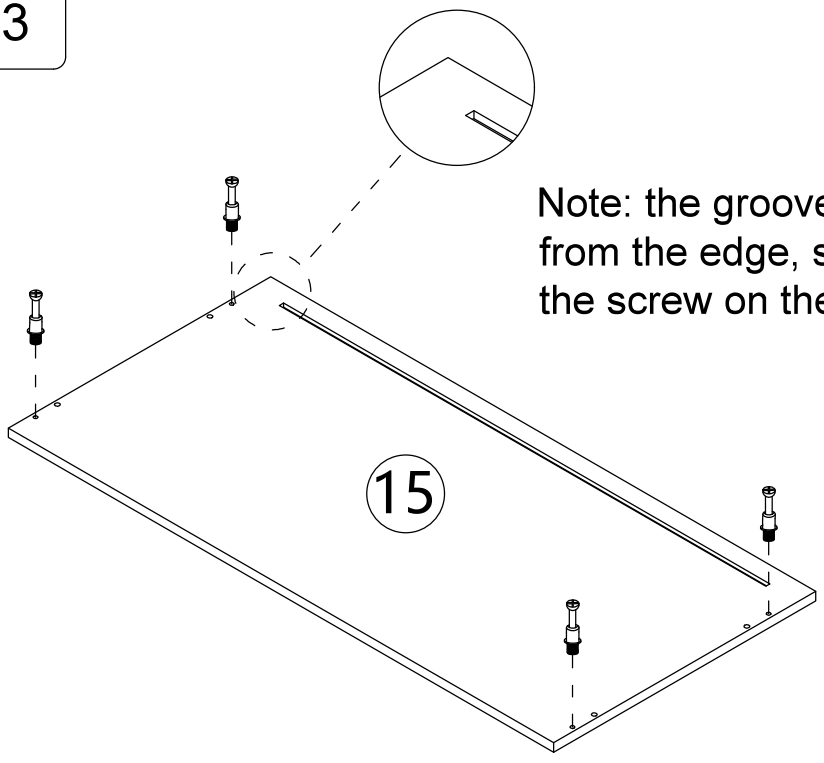

Note: the groove here is far from the edge, so don't install the screw on the wrong side.

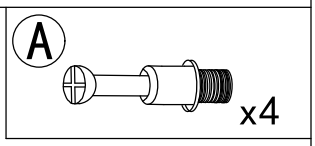

Step 24

B x4

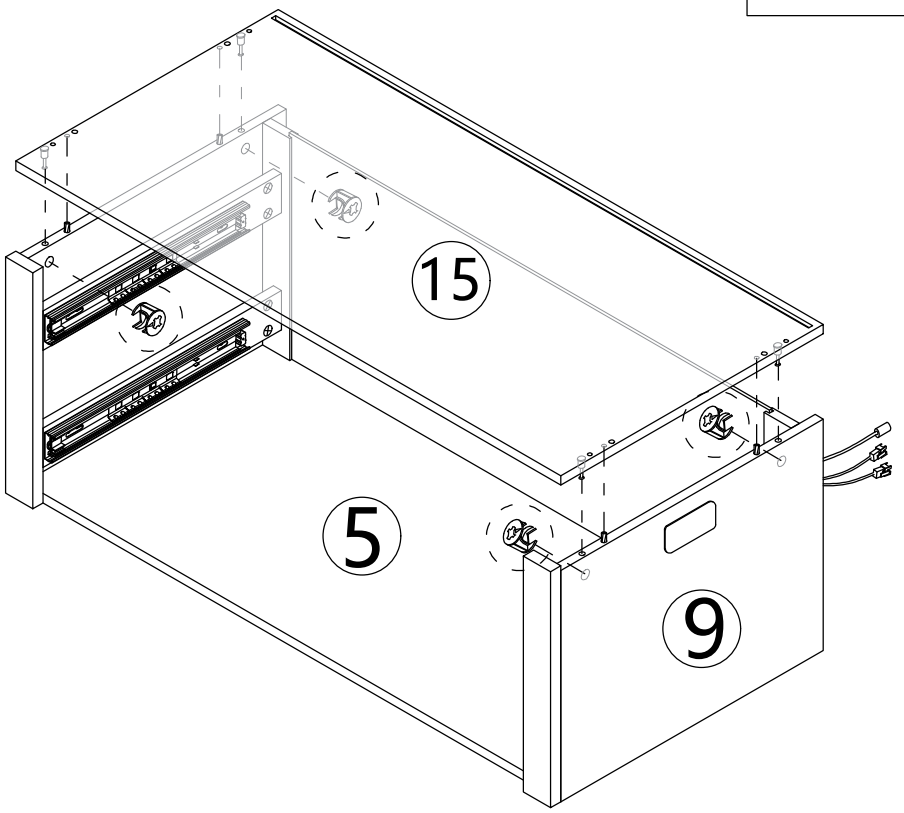

Step 25

A x8

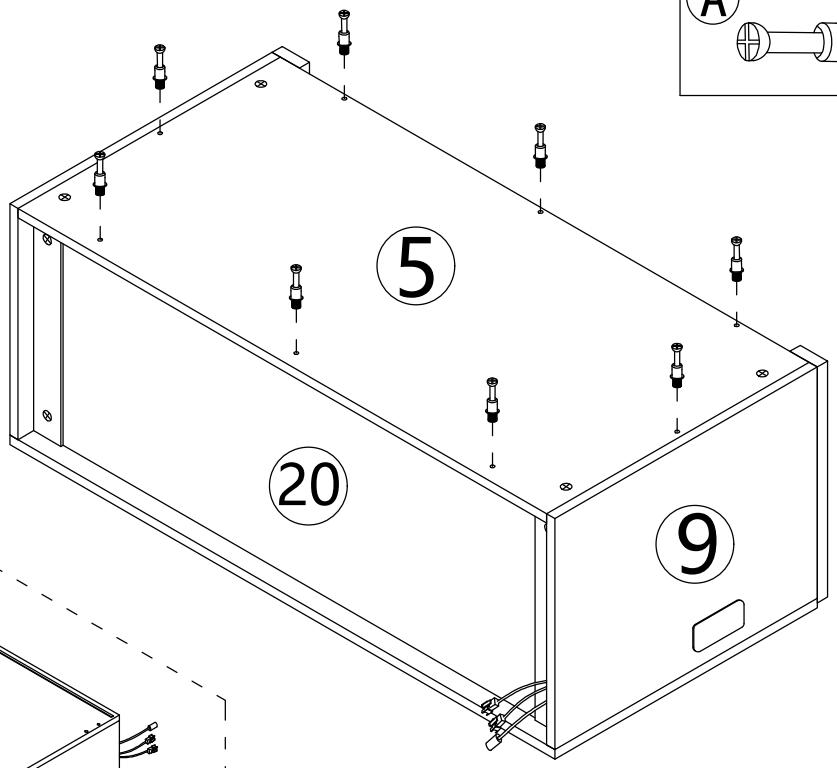

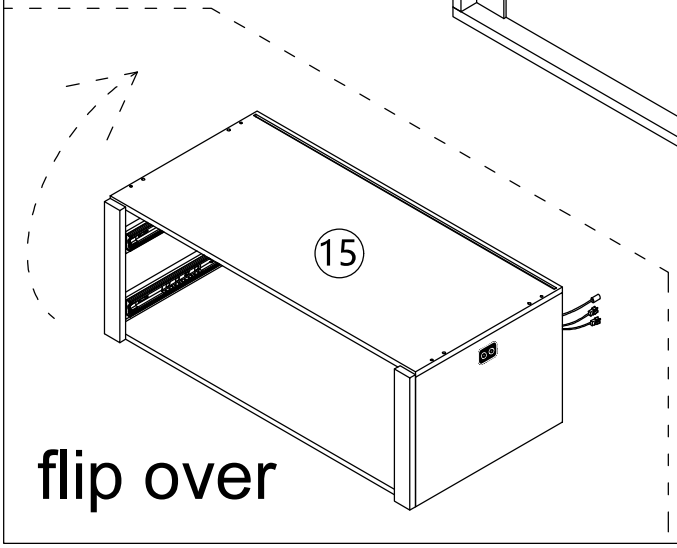

Step 26

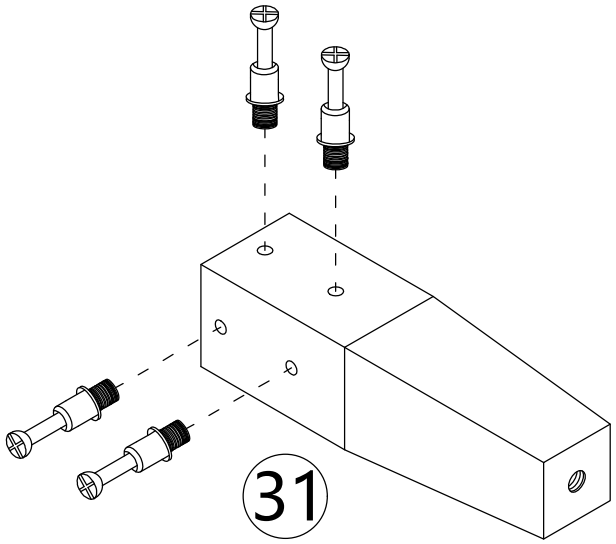

A x16

31 x4

Step 27

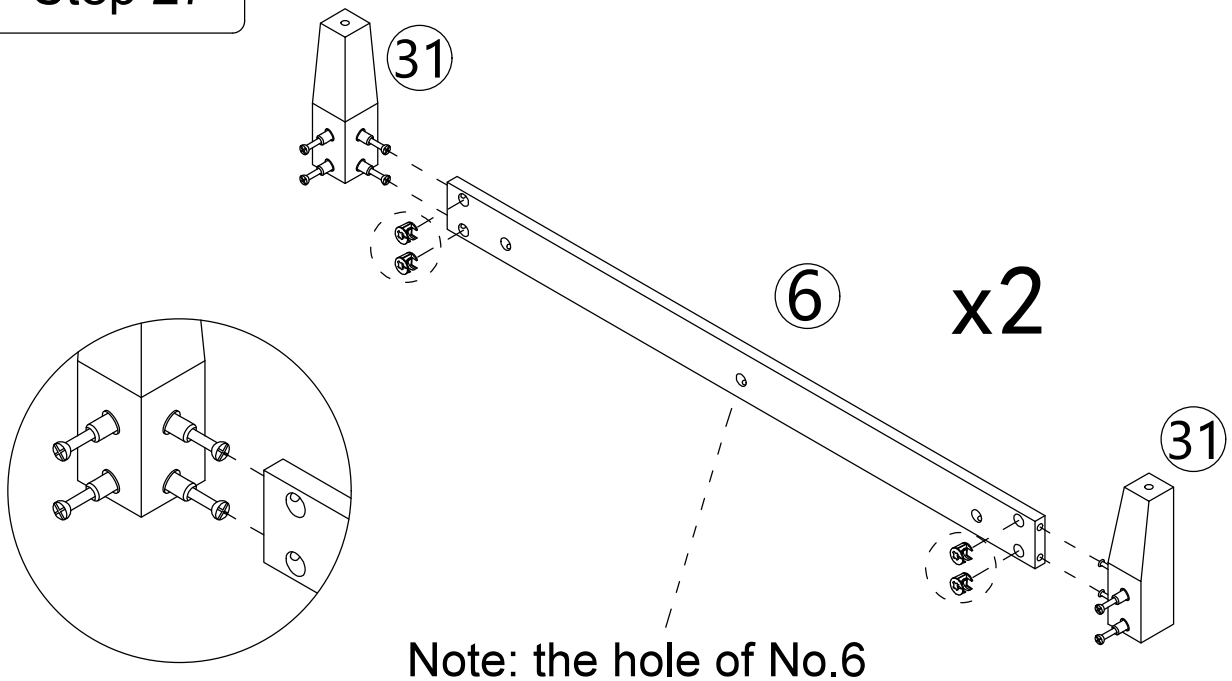

B x8

Note: the hole of No.6 plate faces downwards.

Step 28

B x8

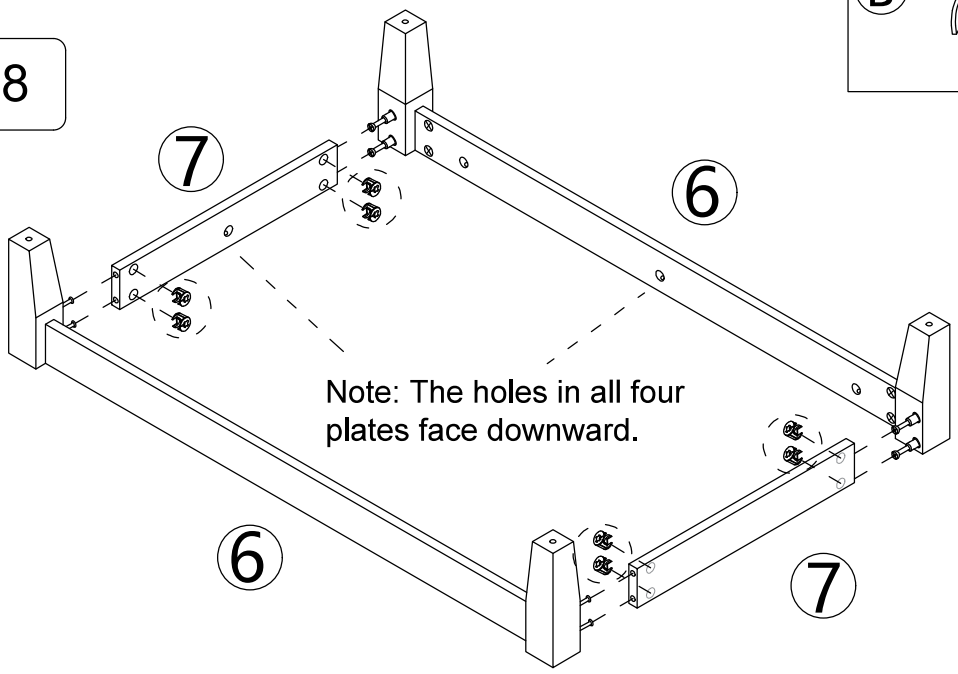

Step 29

B x8

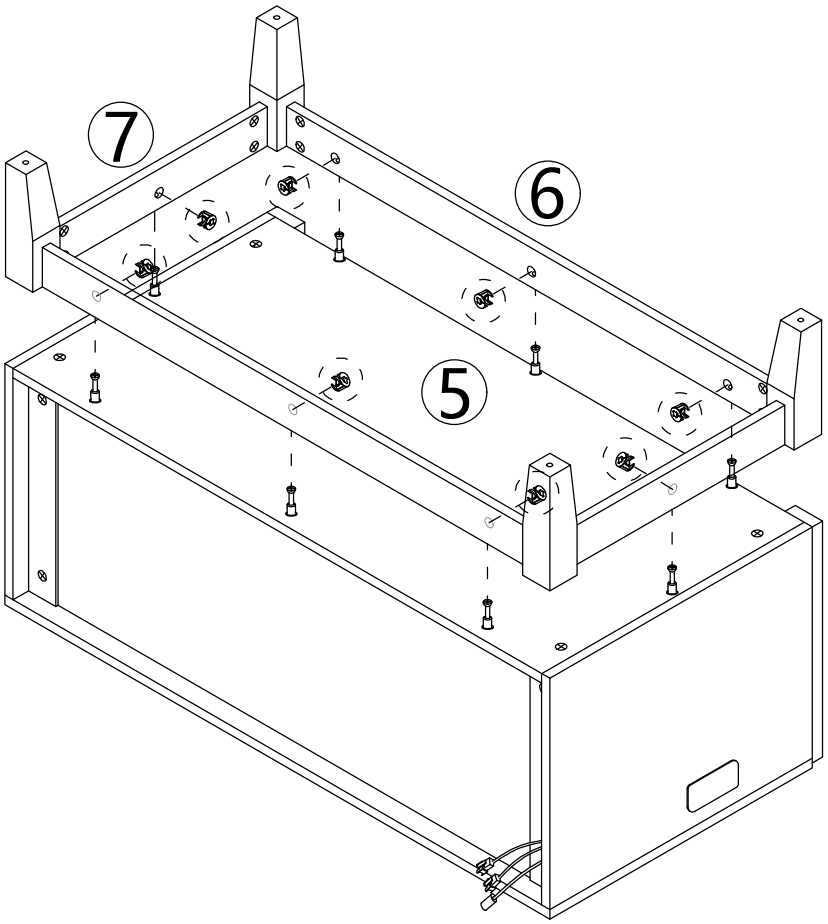

Step 30

G x4

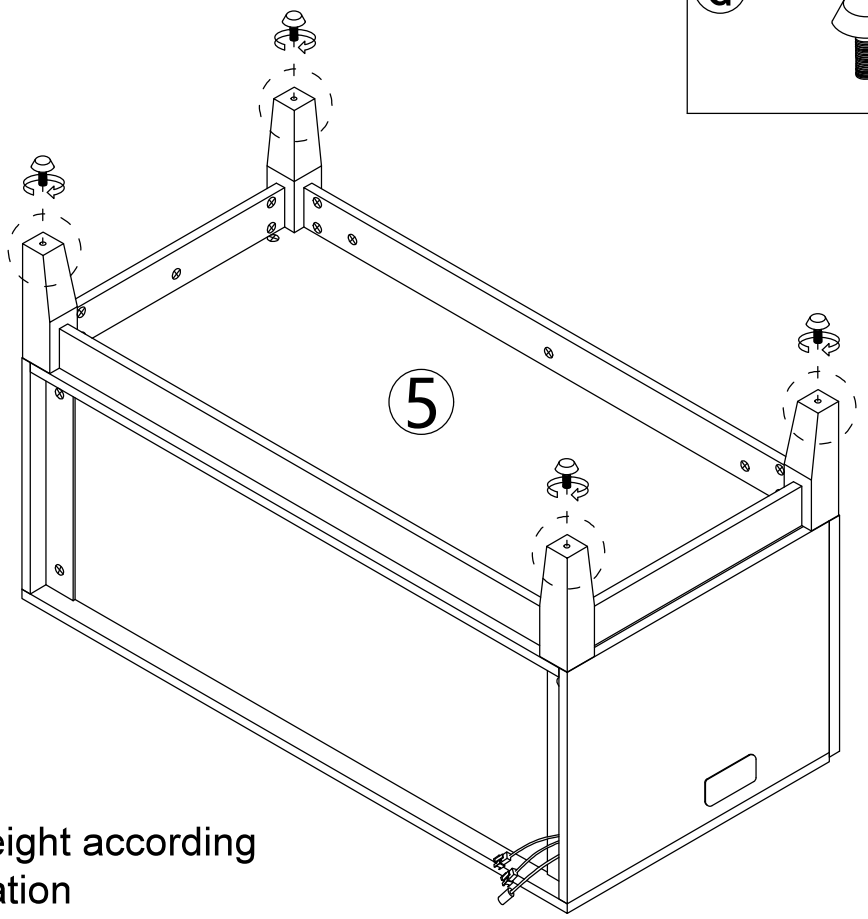

Adjust the foot height according to the actual situation

Step 31

A x4

C x4

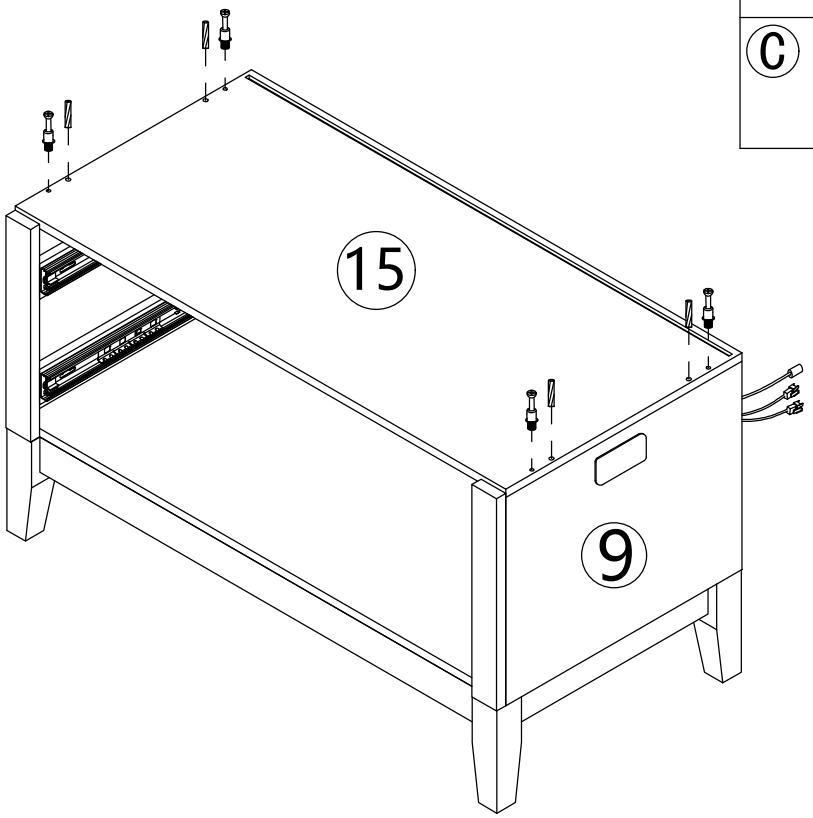

Step 32

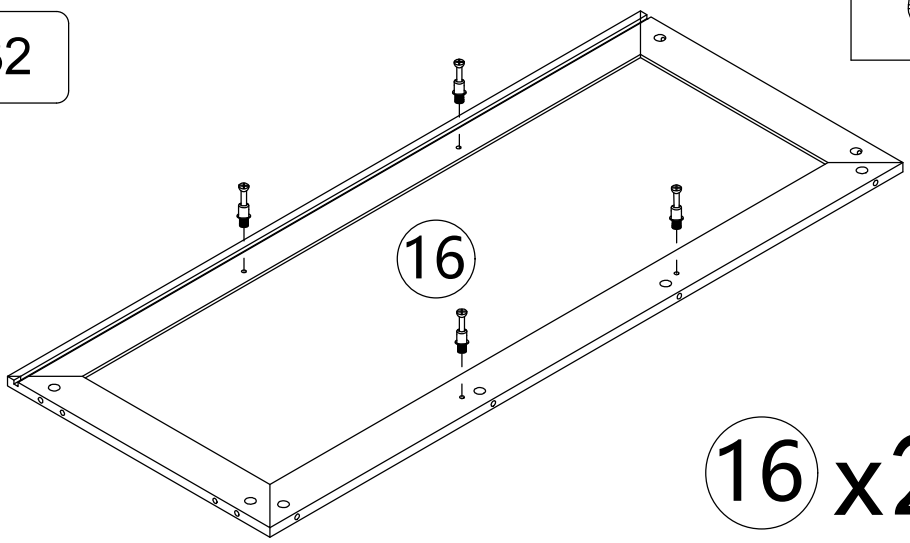

A x8

16 x2

Step 33

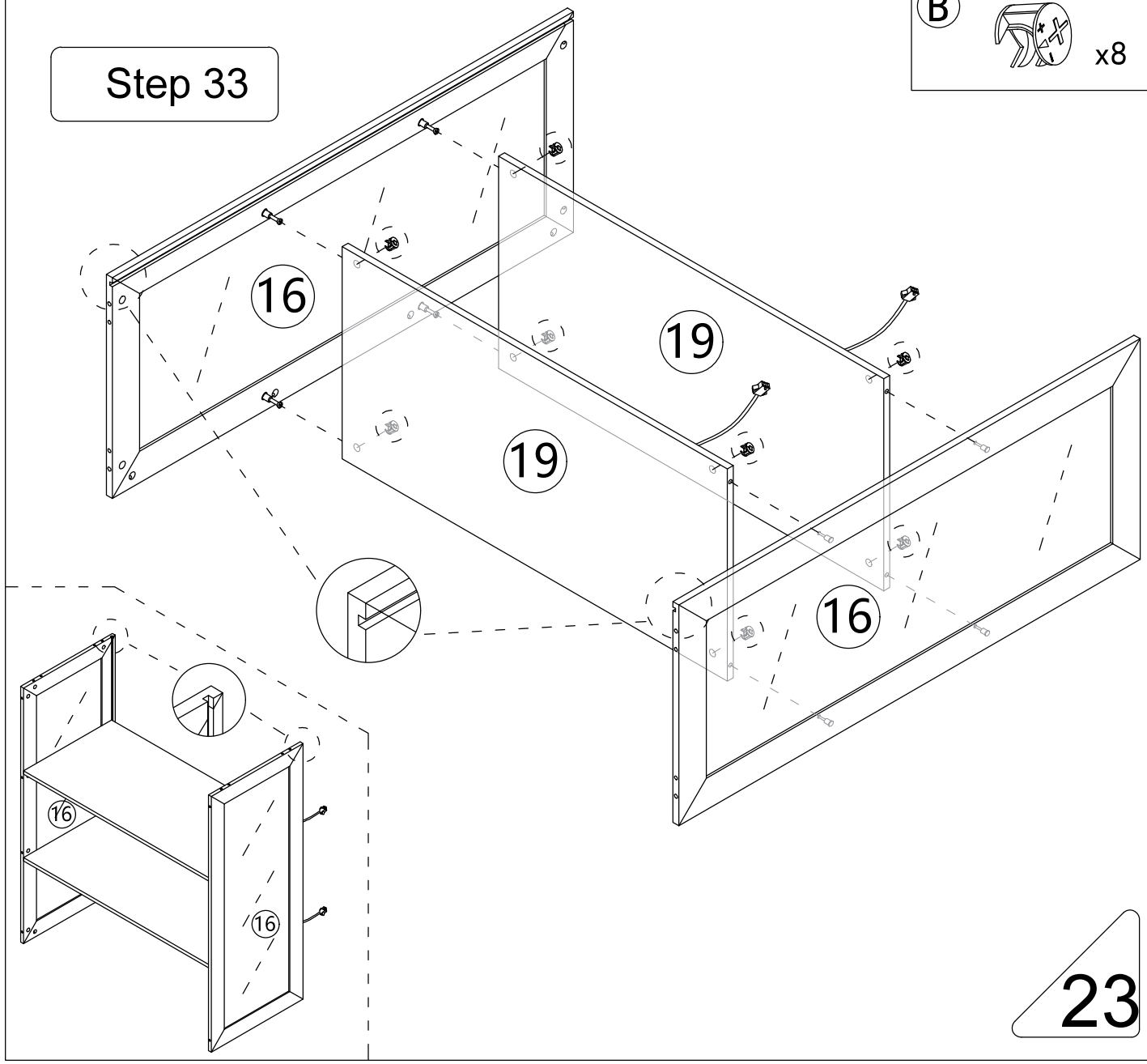

B x8

Step 34

B x4

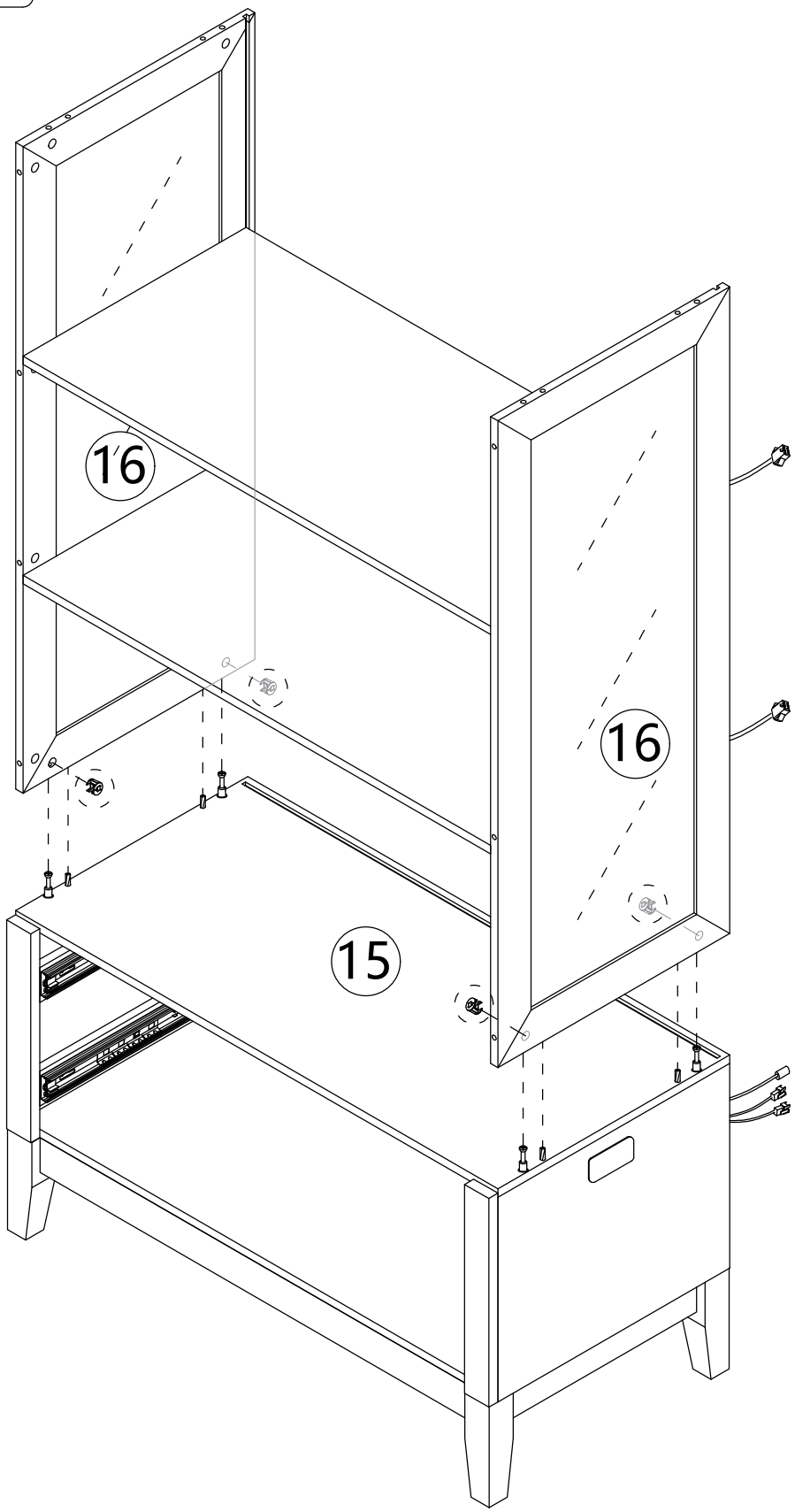

Step 35

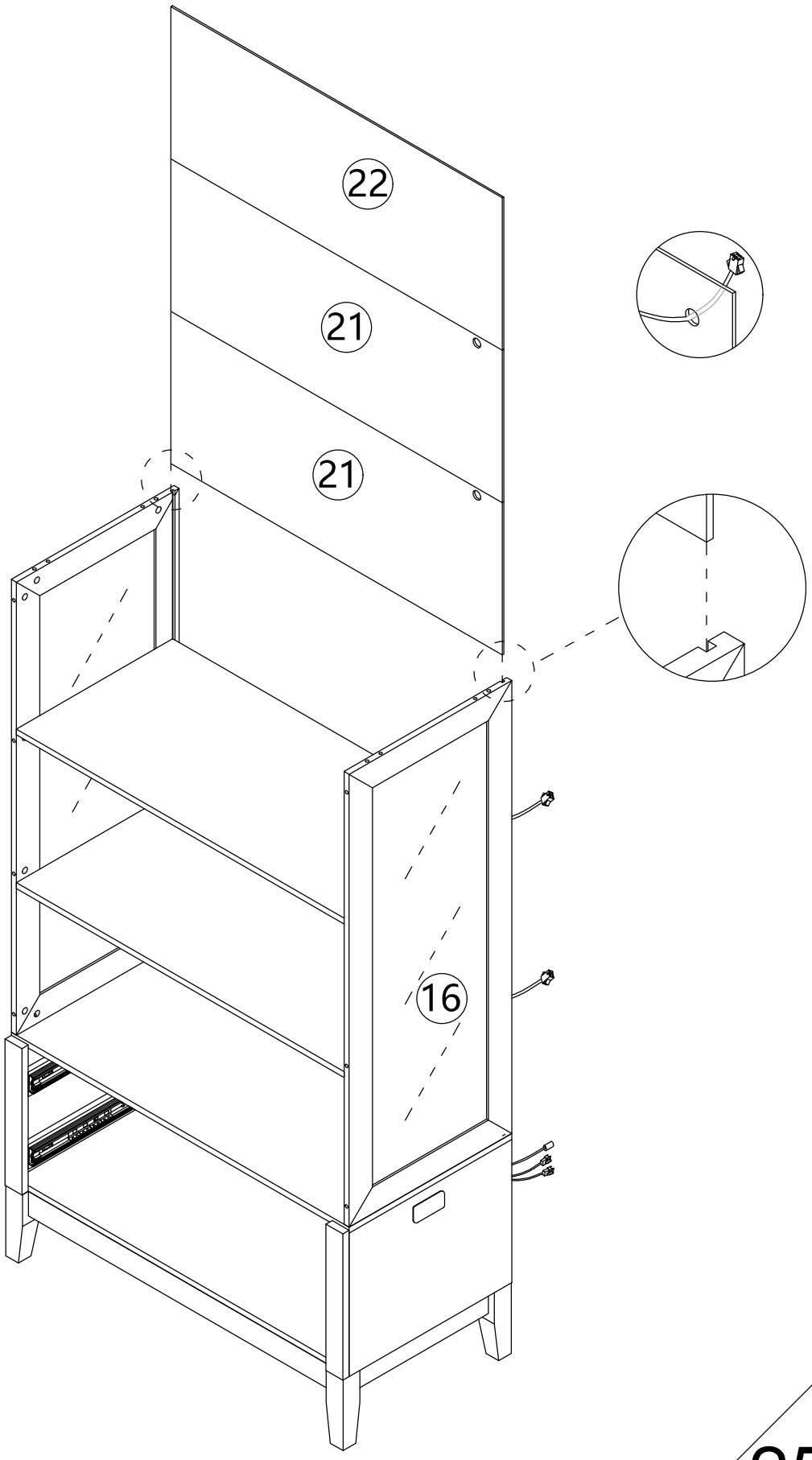

Step 36

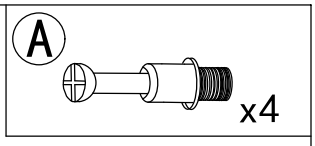

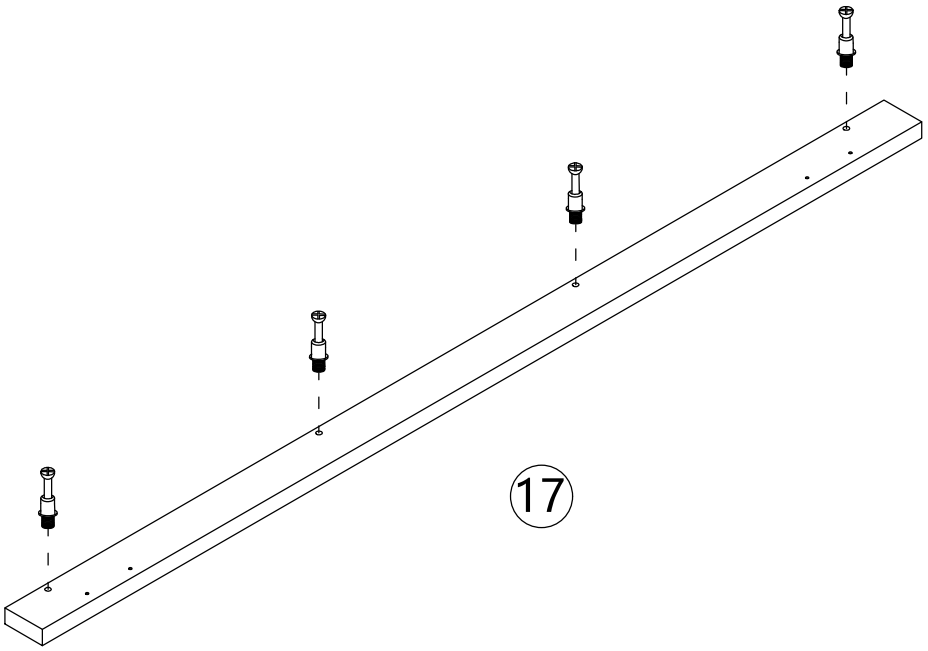

Step 37

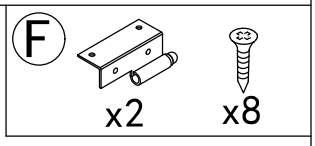

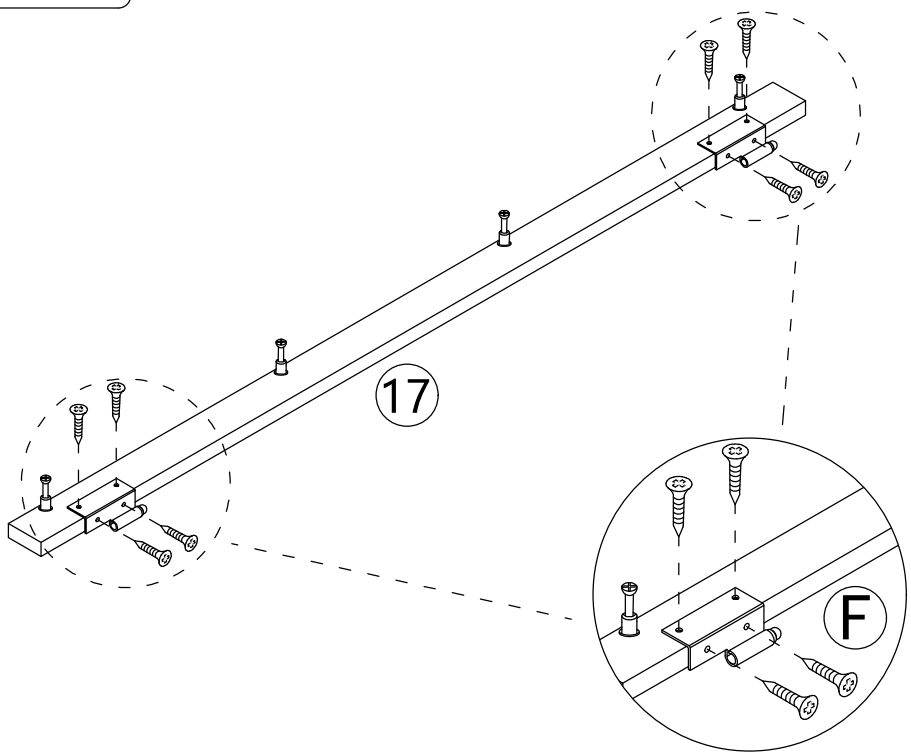

Step 38

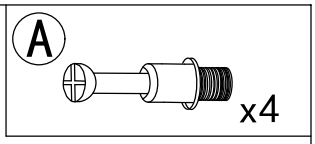

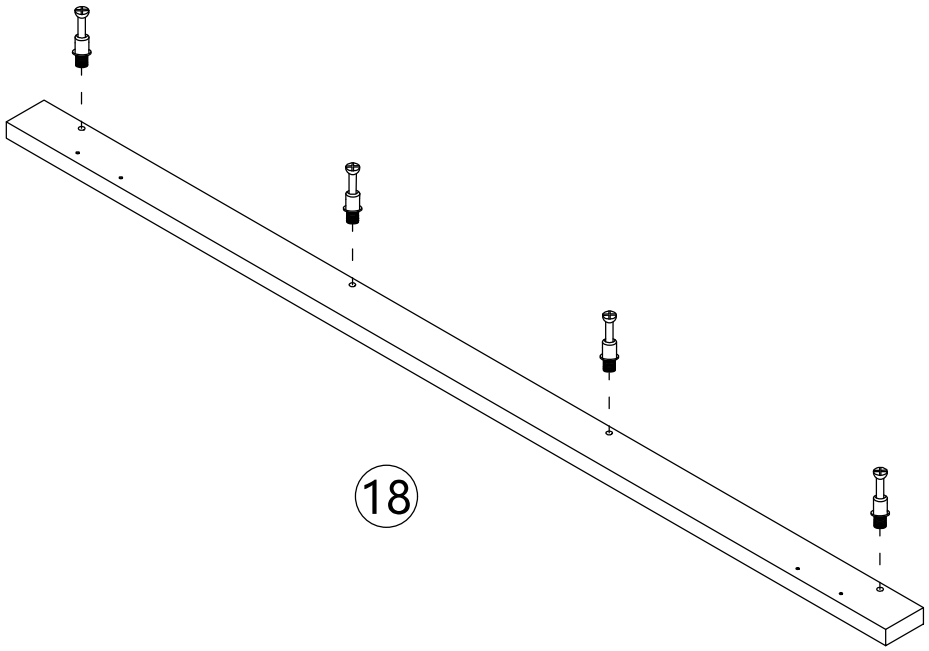

Step 39

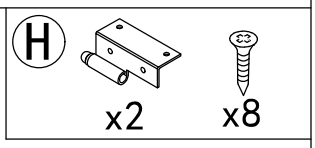

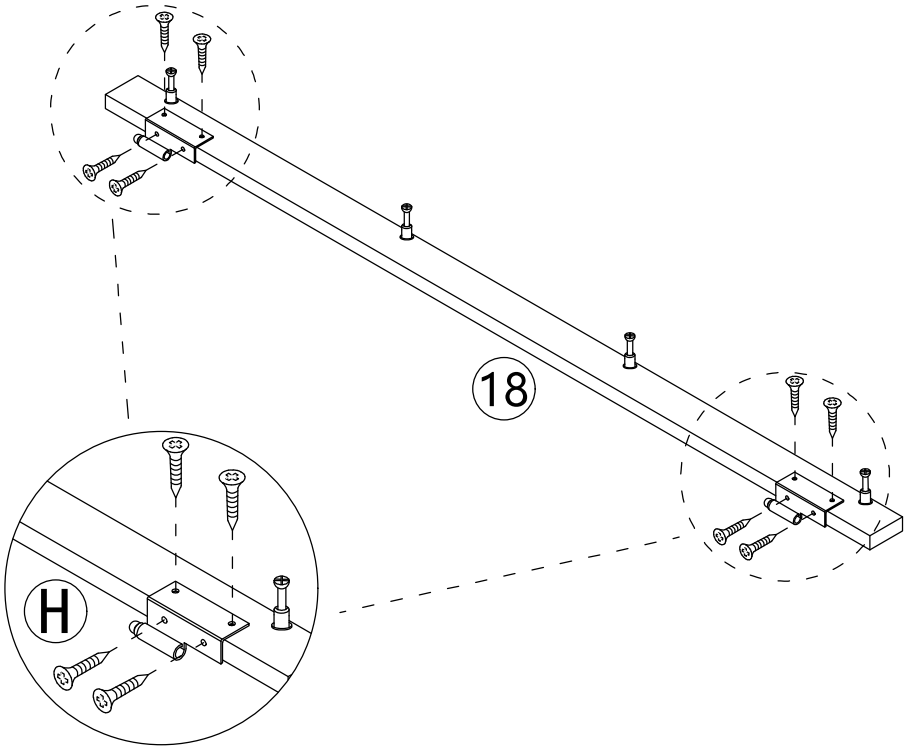

Step 40

B		x8
C	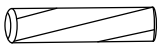	x4

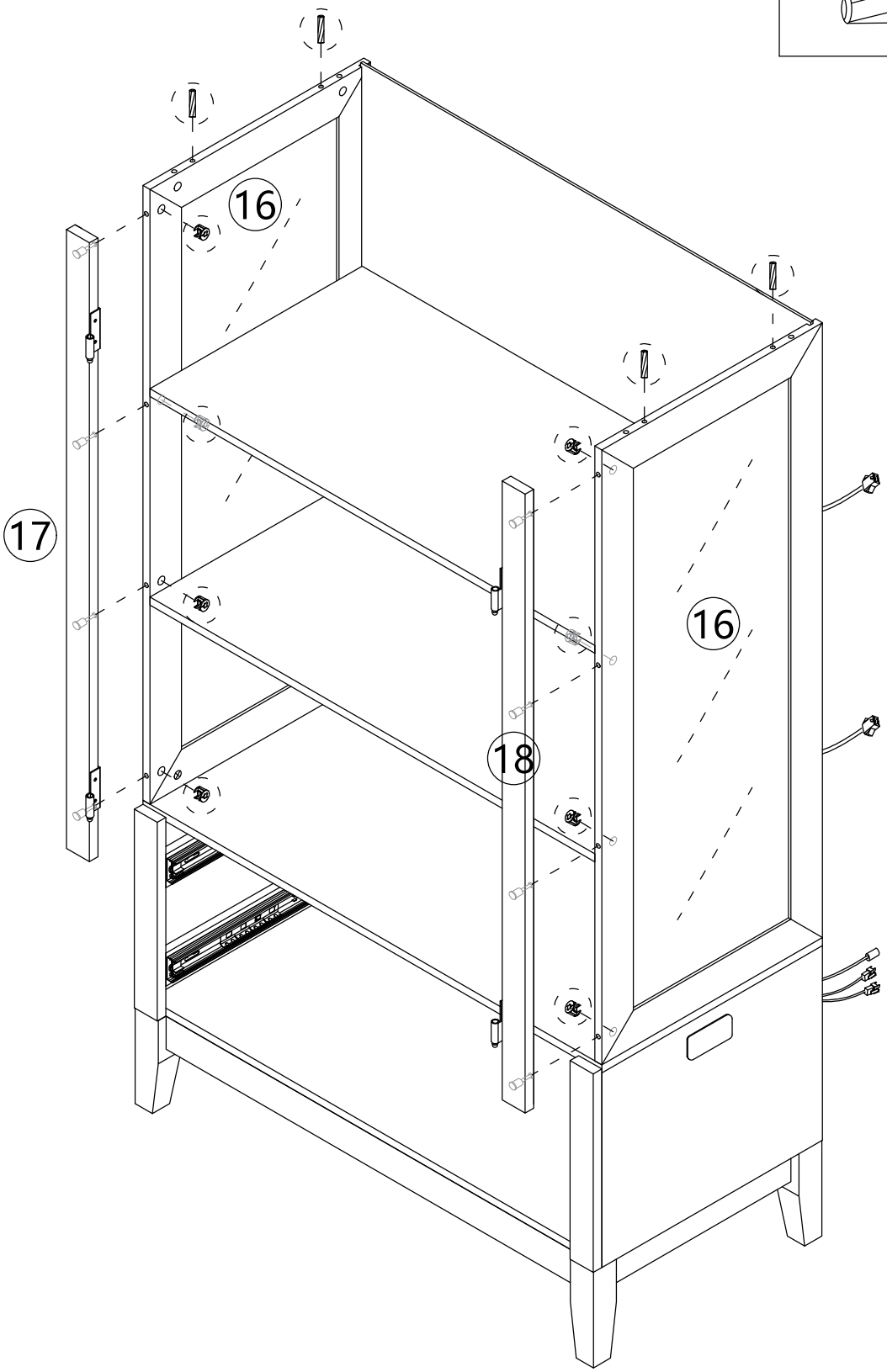

Step 41

Connect the light cable socket

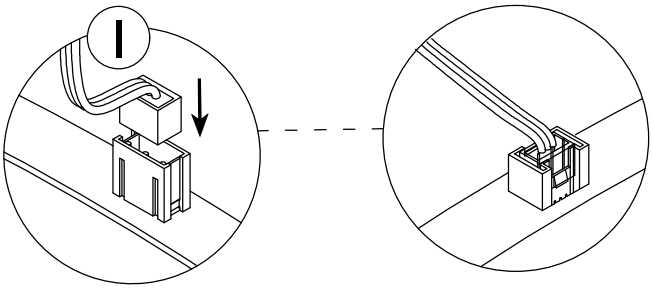

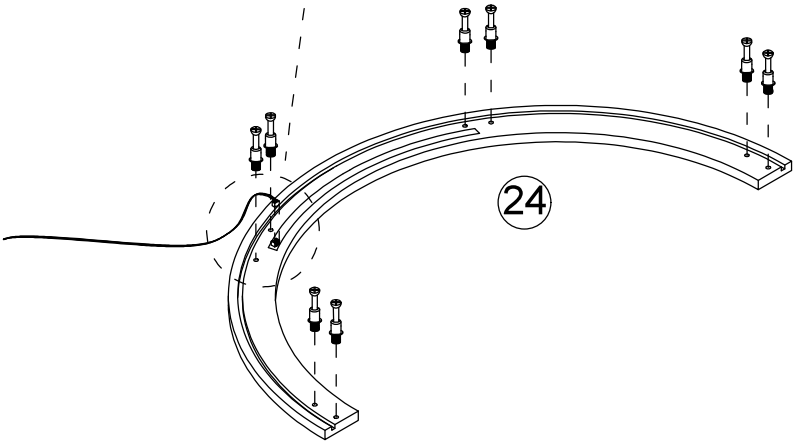

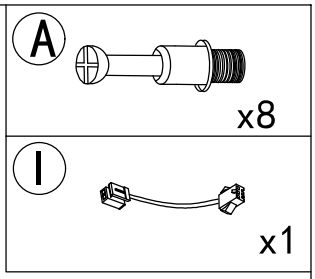

Step 42

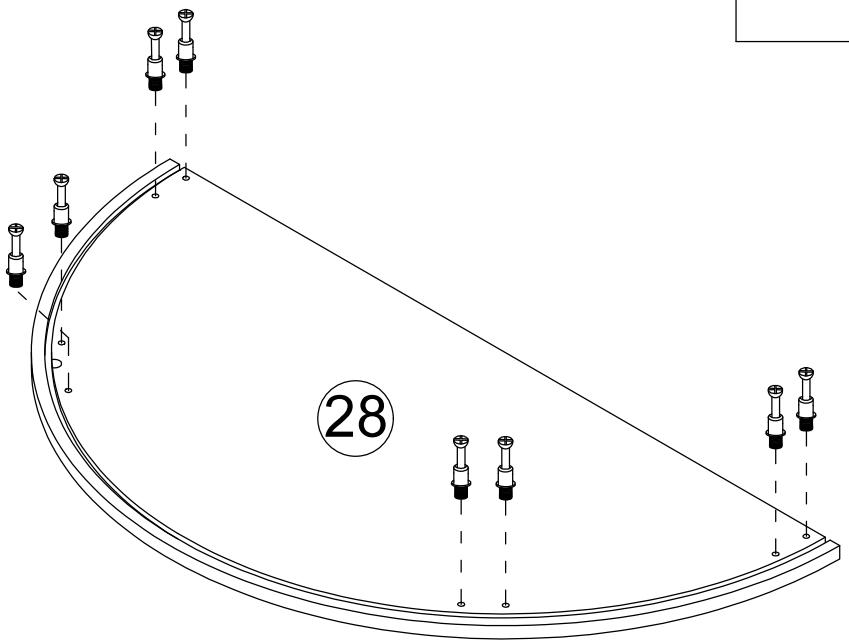

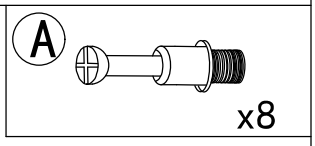

Step 43

B x8

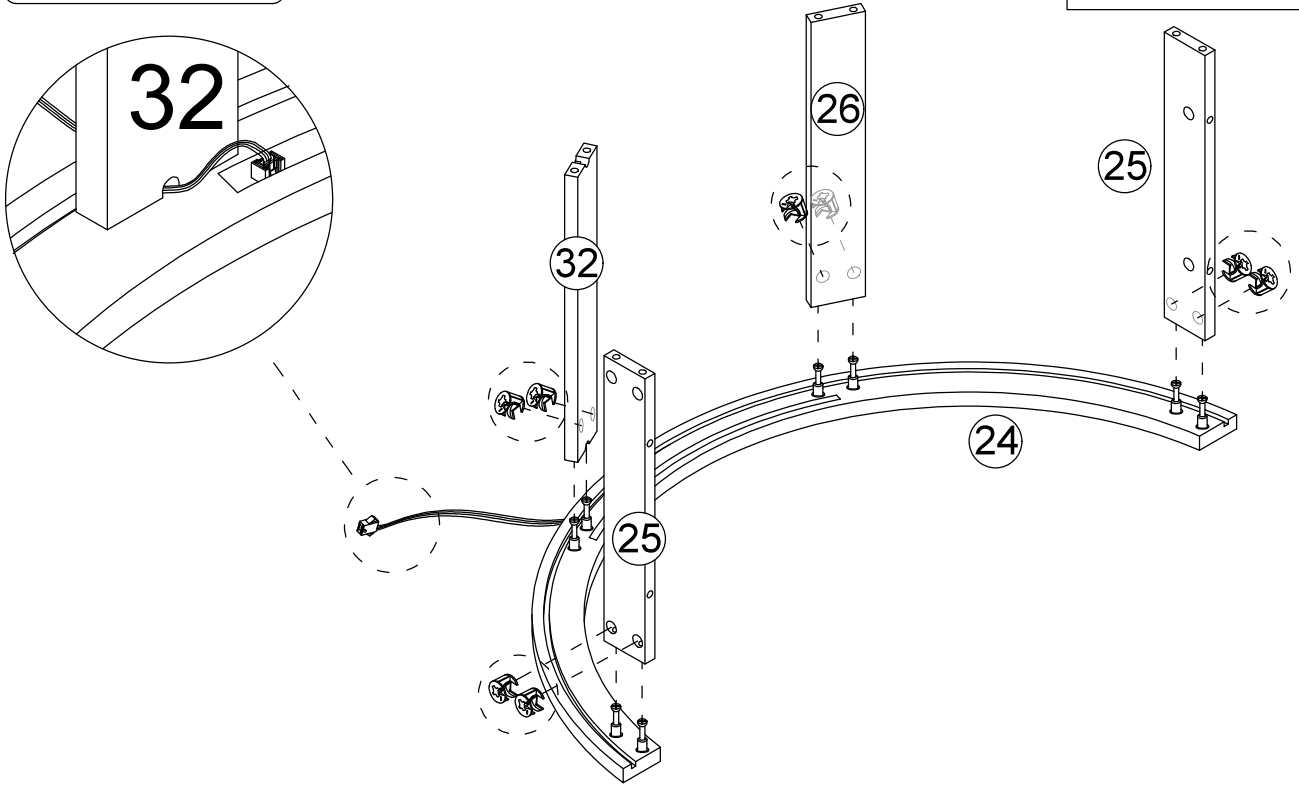

Thread the light wire through board 32 and tighten the nut

J x1

Step 44

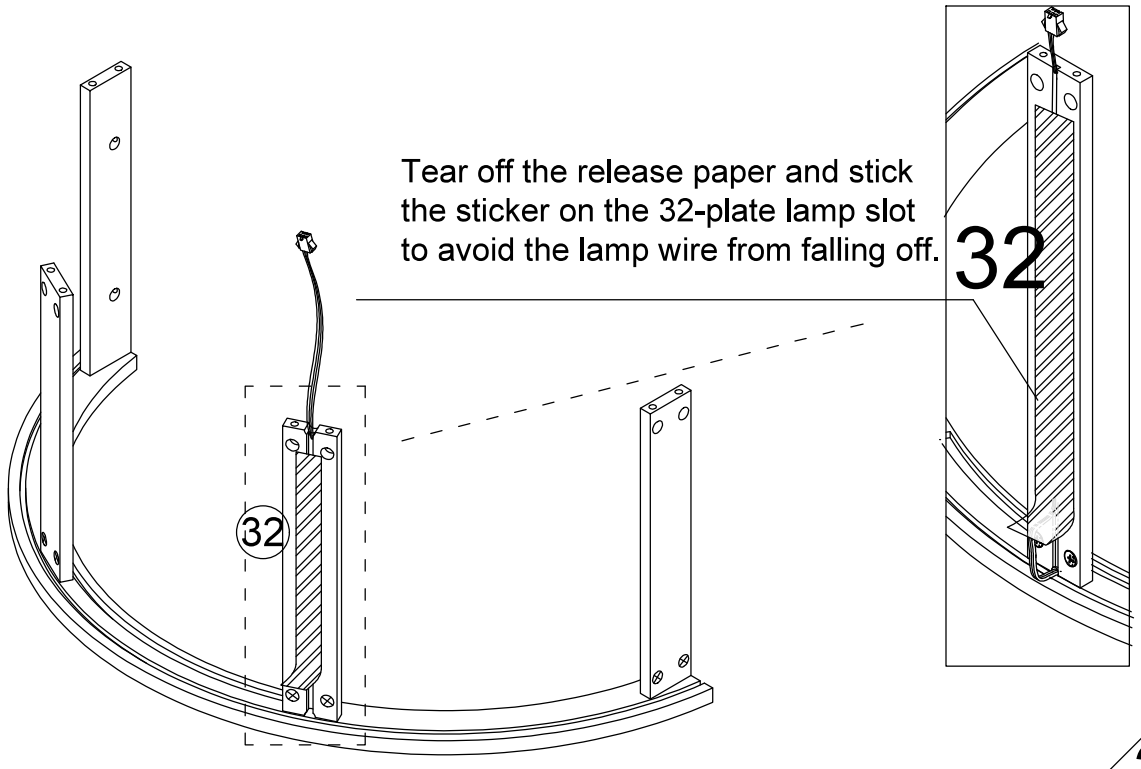

Step 45

B x8

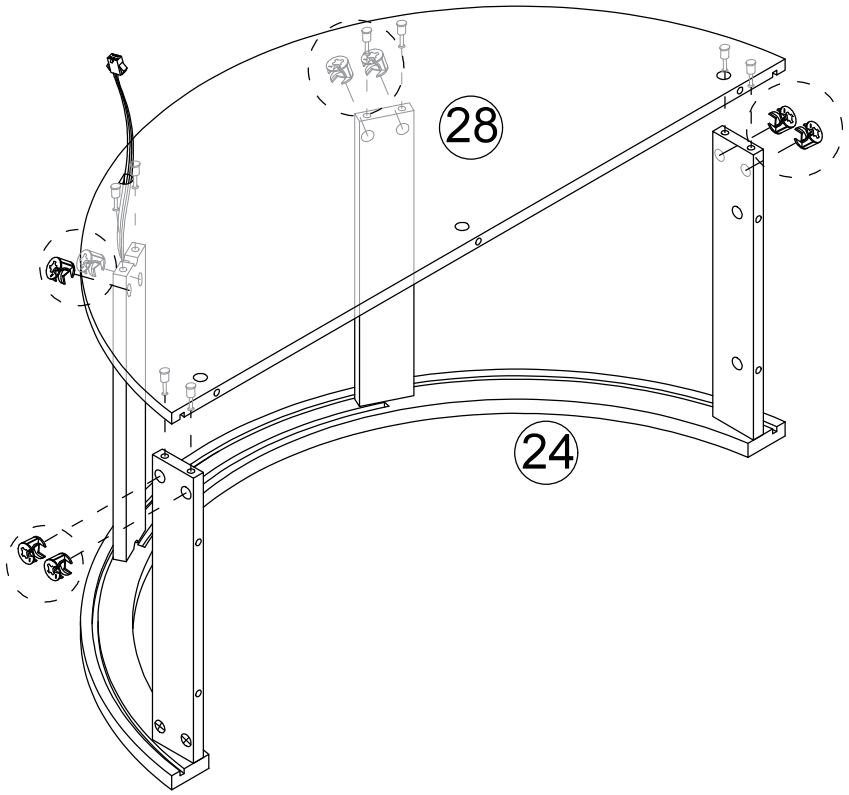

Step 46

A x7

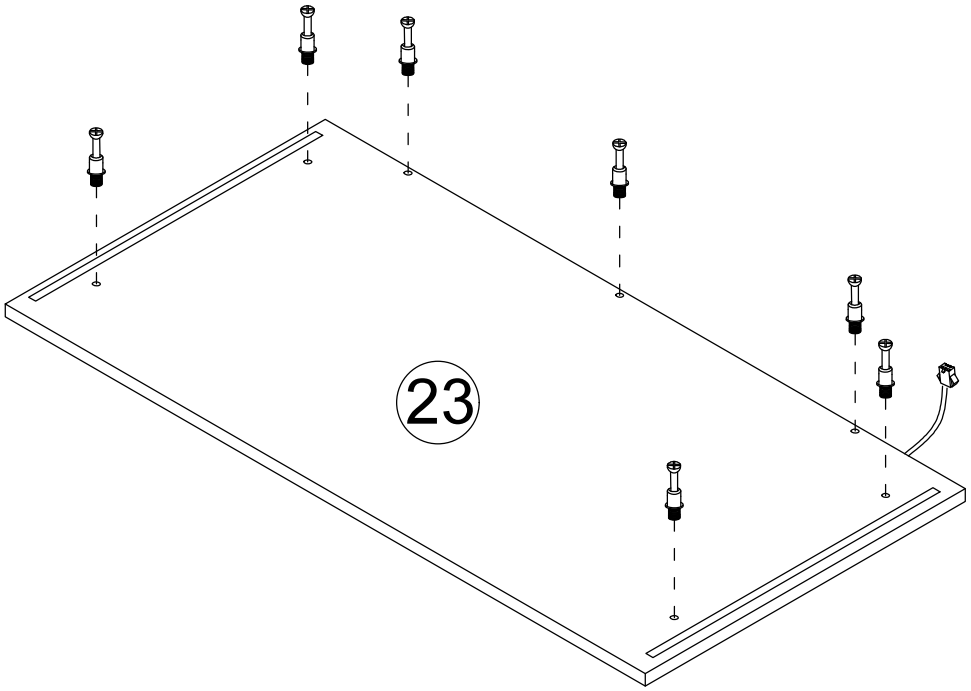

Step 47

Note: When installing the 27 plate,
push the middle of the 27 plate by hand
to push the 27 plate into the groove.

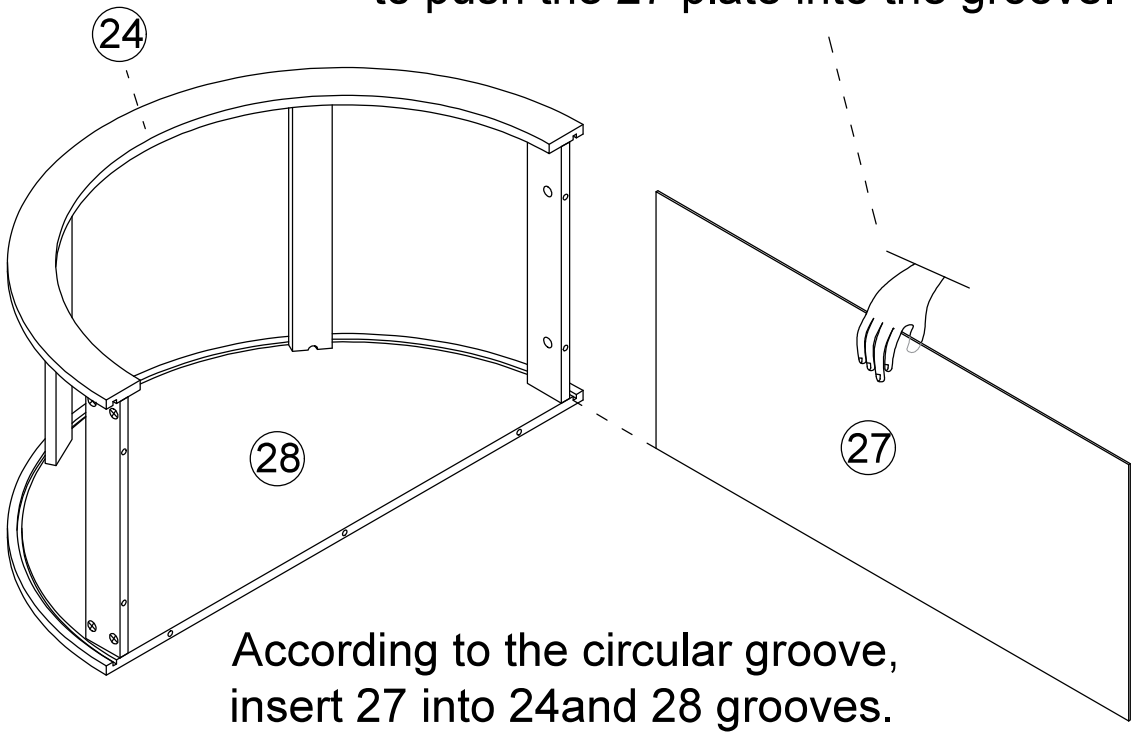

According to the circular groove,
insert 27 into 24and 28 grooves.

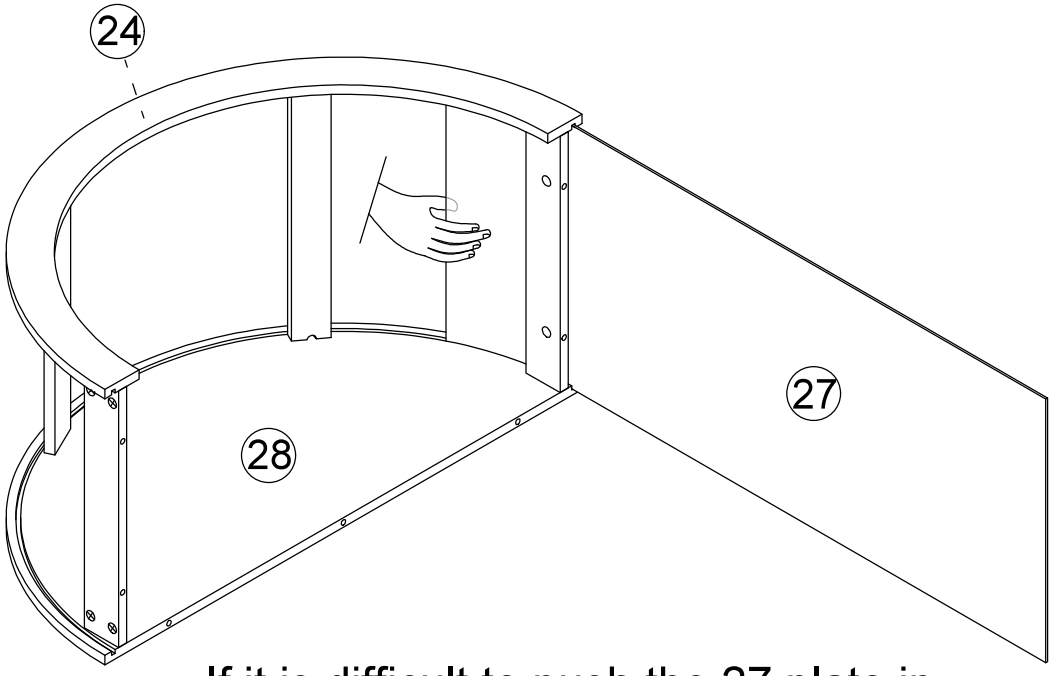

If it is difficult to push the 27 plate in,
you can use the pull method.

Step 48

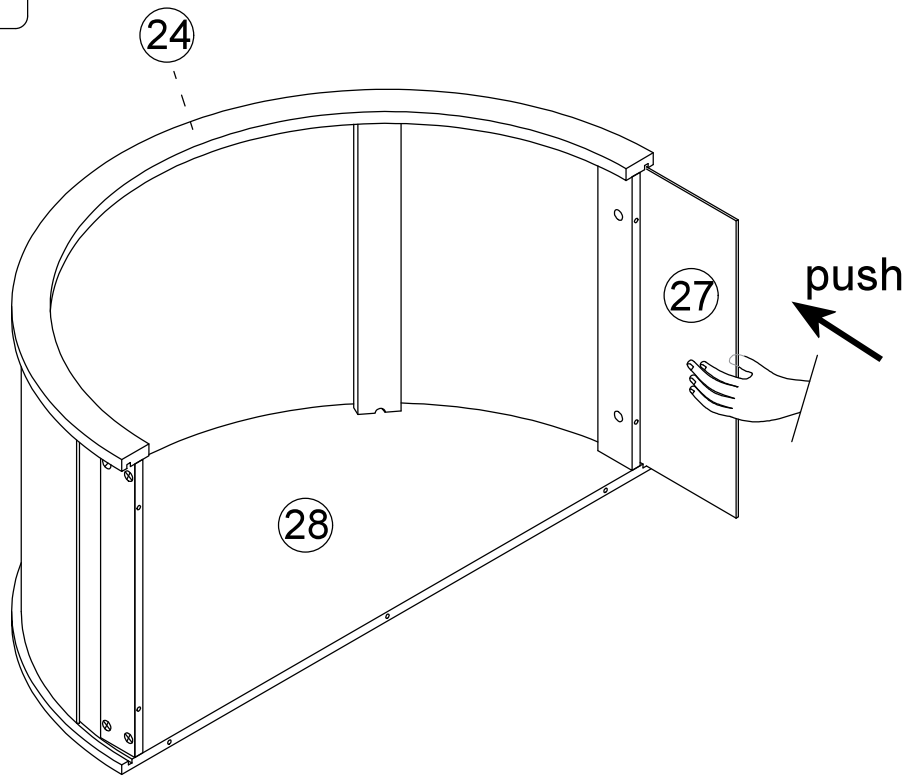

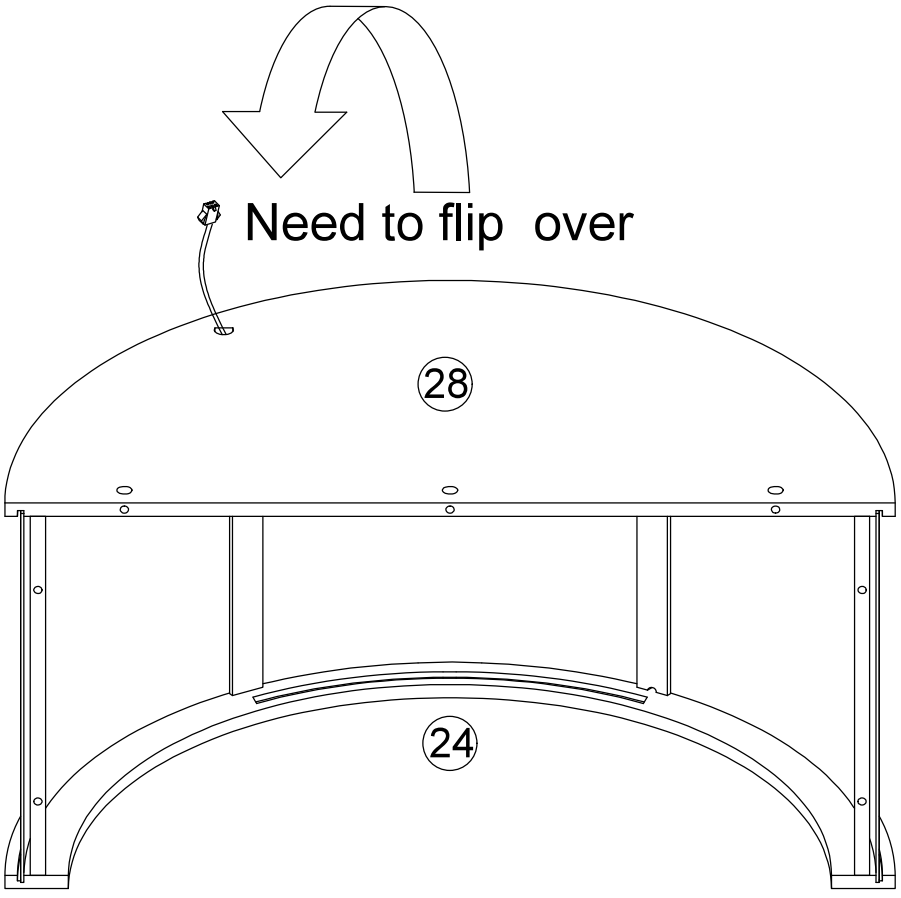

Step 49

B x3

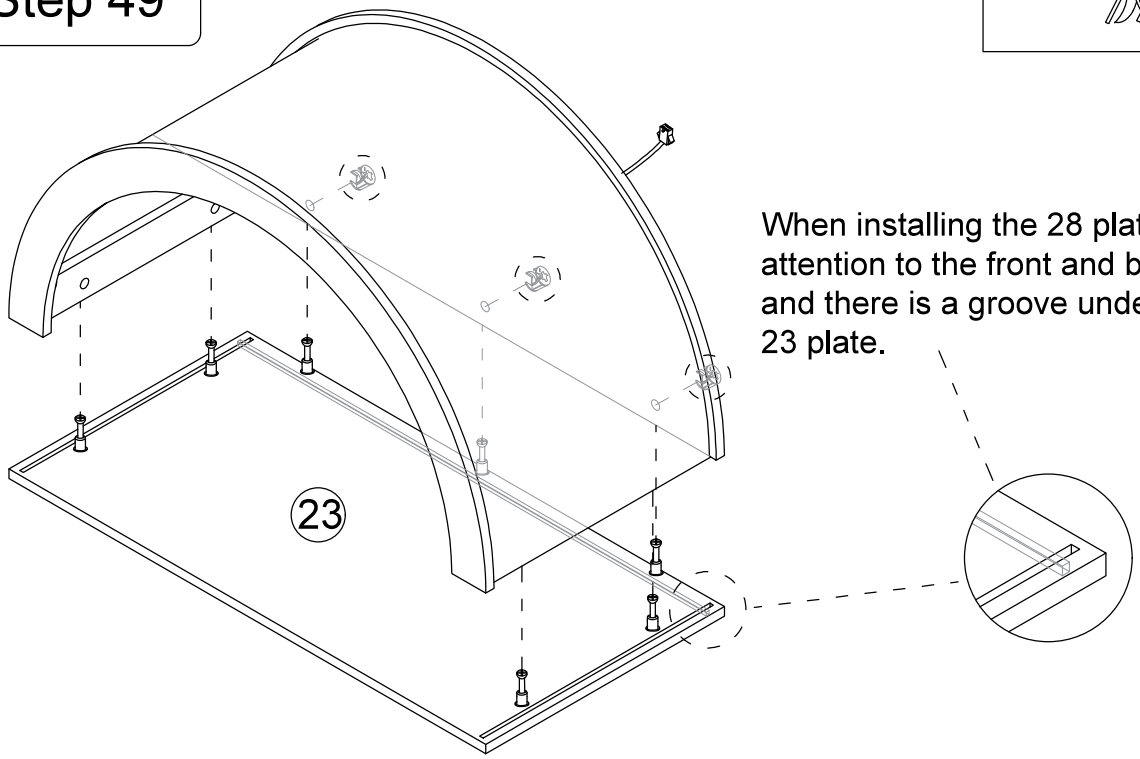

When installing the 28 plate, pay attention to the front and back, and there is a groove under the 23 plate.

Step 50

B x4

Note: After installing the 27 board, you need to pat the backboards on both sides into the grooves of the 23 board by hand.

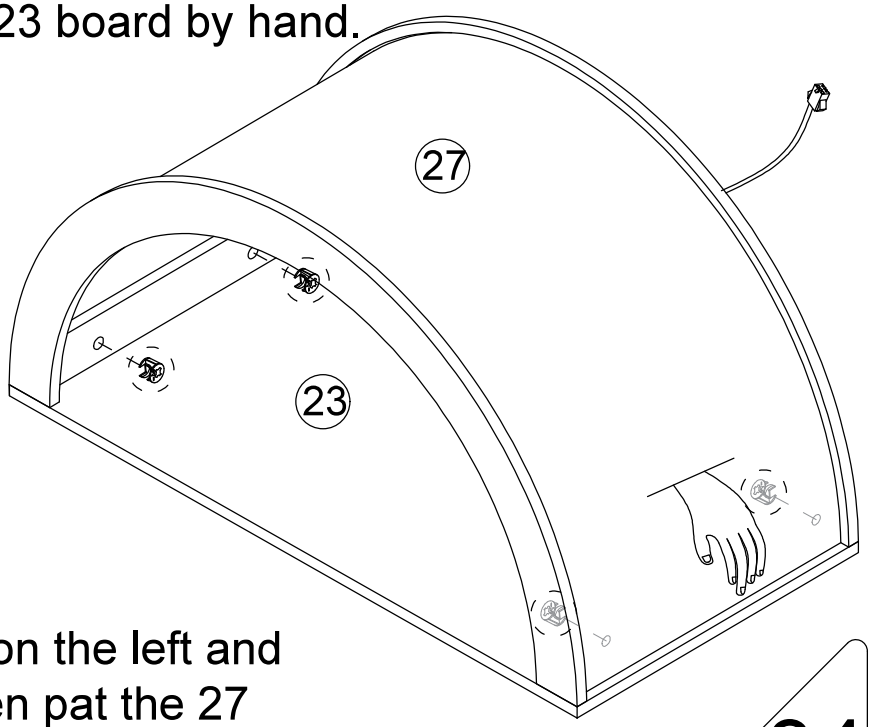

Note: pat the 27 plate on the left and then screw the nut, then pat the 27 plate on the right and screw the nut.

Step 51

J x4

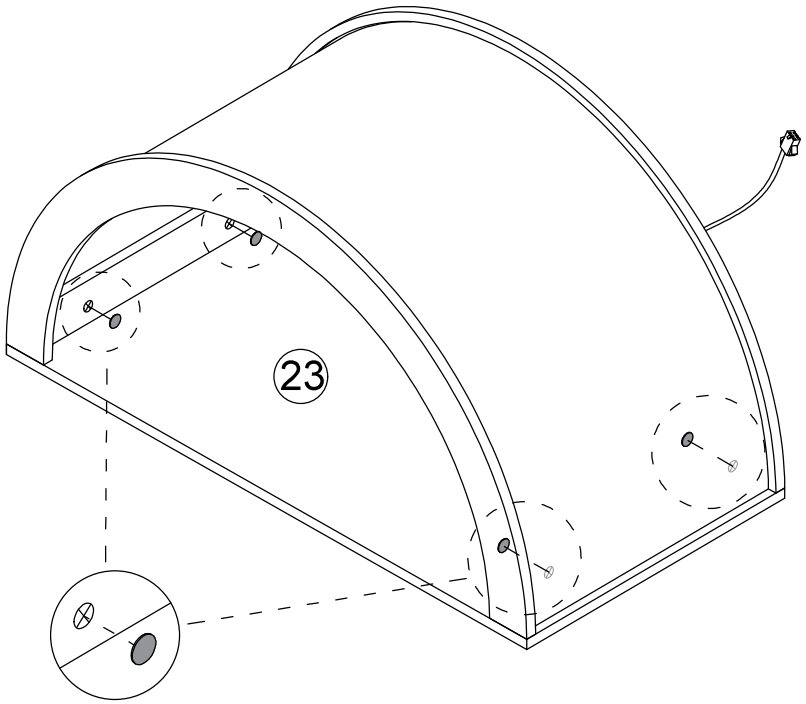

Step 52

A x4

0 x1 x2

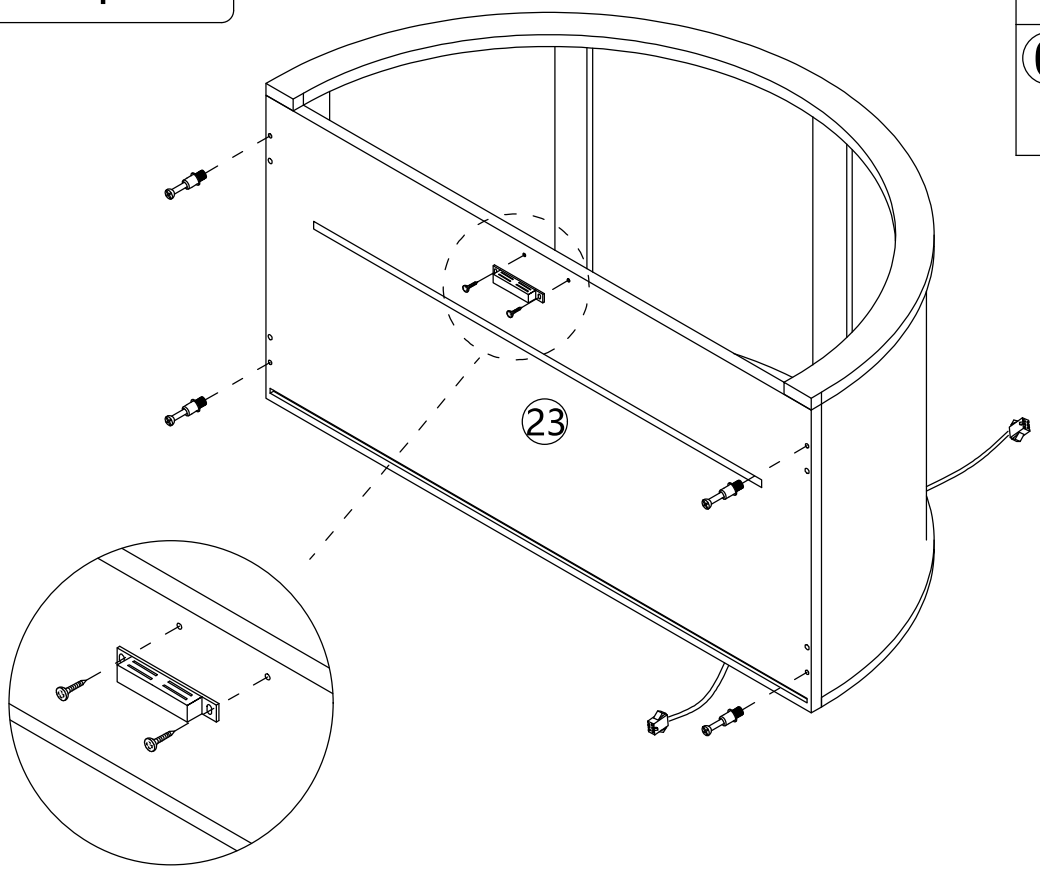

Step 53

B x4

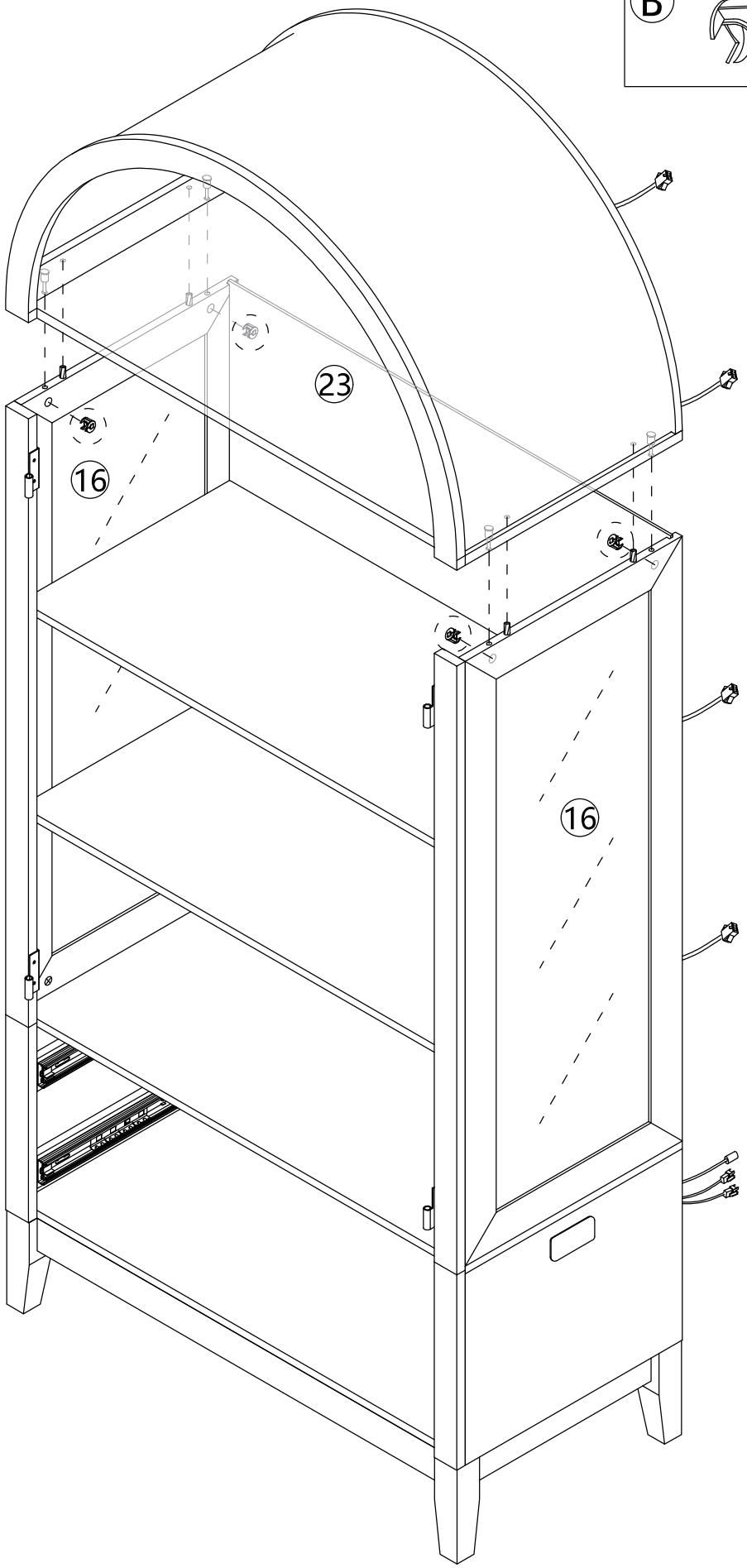

H	4pcs	16pcs	K	2pcs	4pcs	L	16pcs	16pcs
M	2pcs		N	16pcs		P	2pcs	2pcs
Q	1pcs	1pcs		2pcs	1pcs 1pcs	F	4pcs	16pcs
R	4pcs							

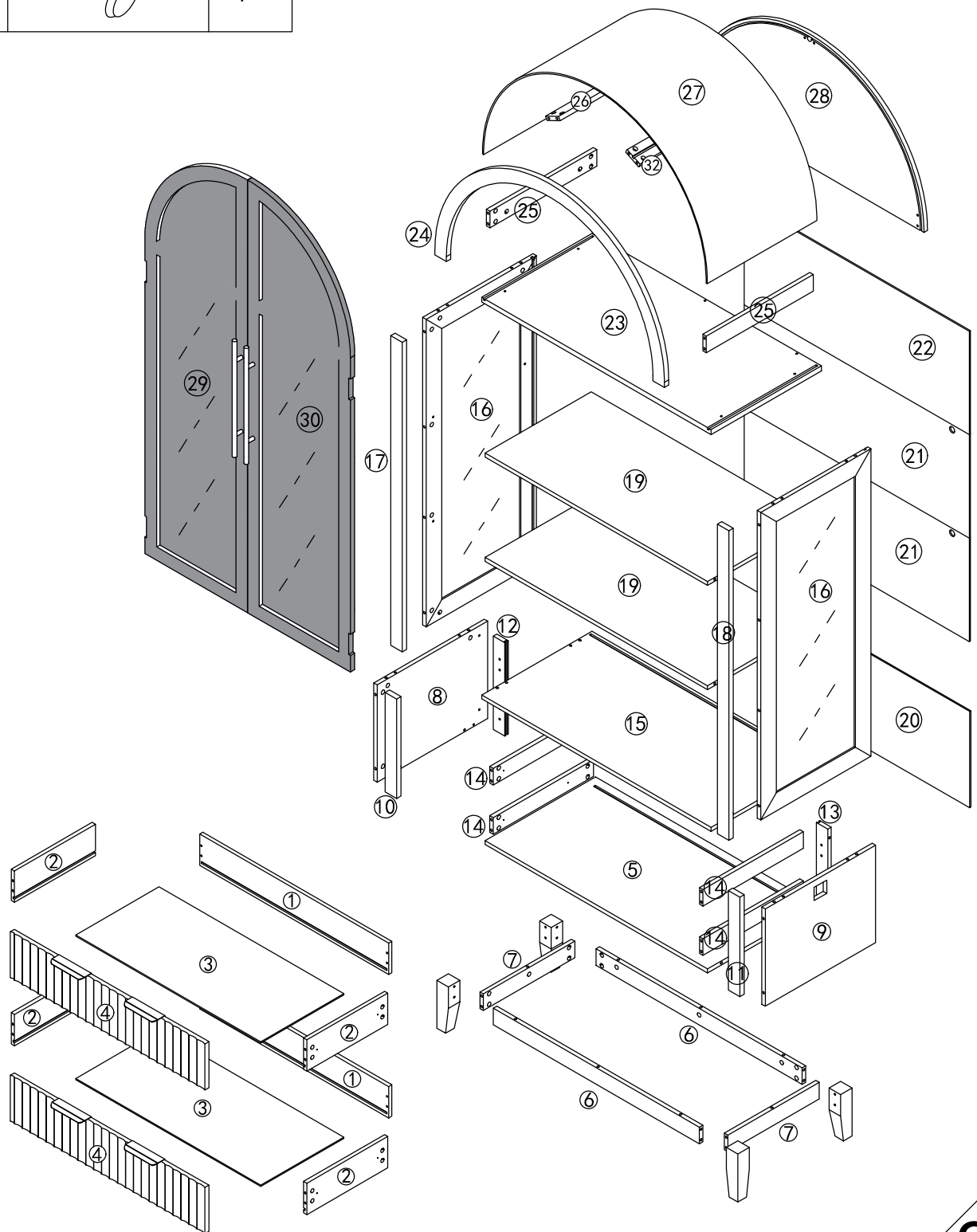

Step 54

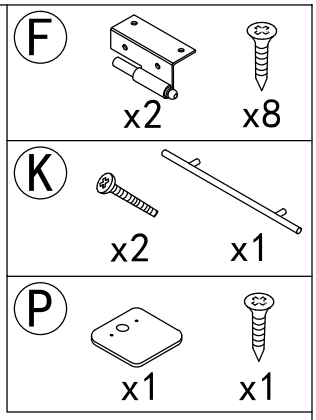

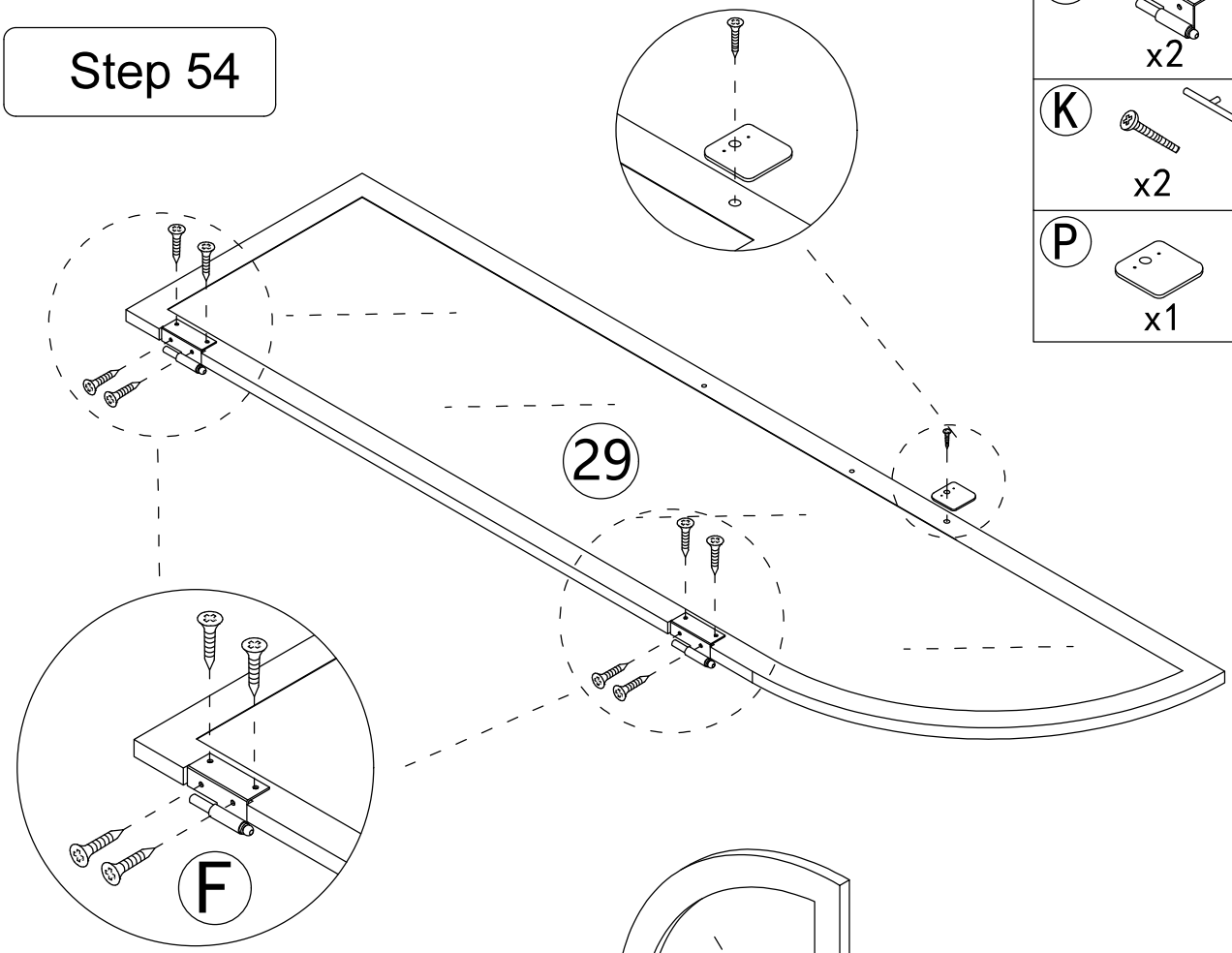

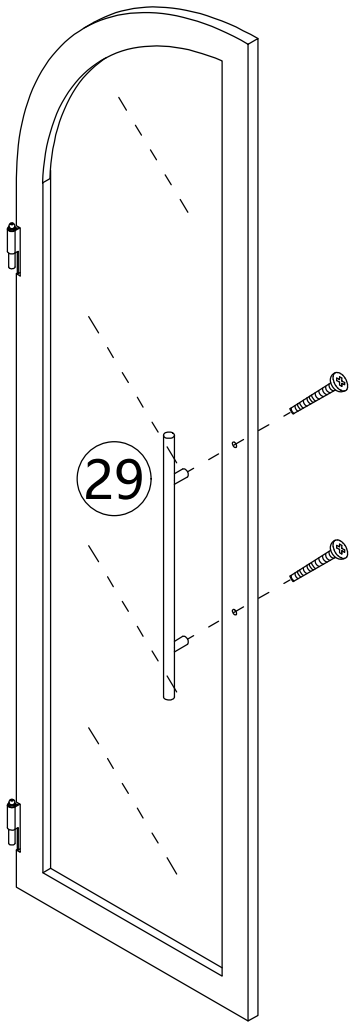

Step 55

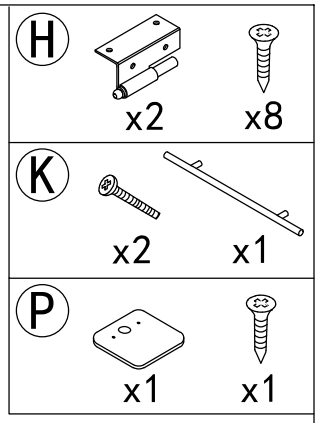

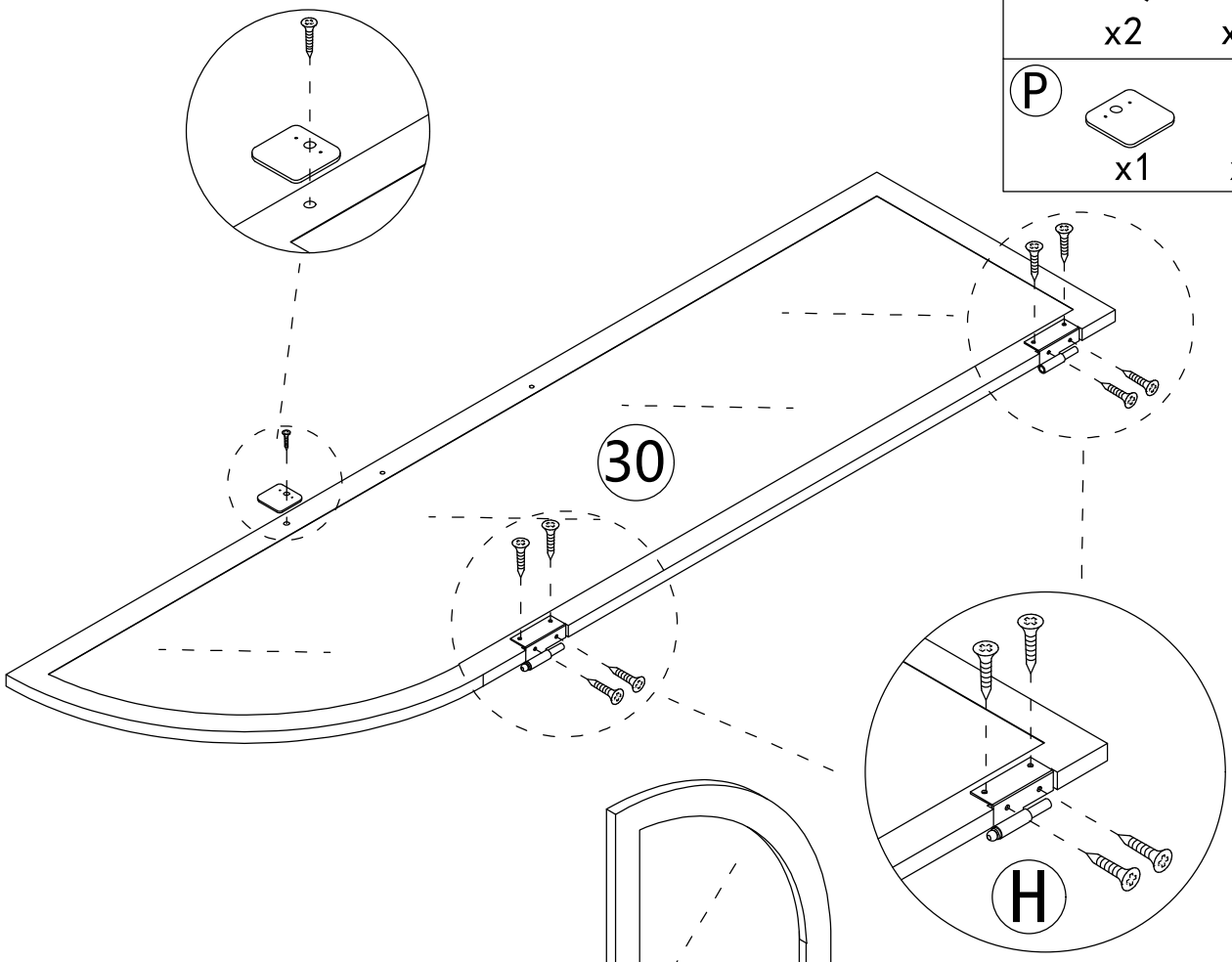

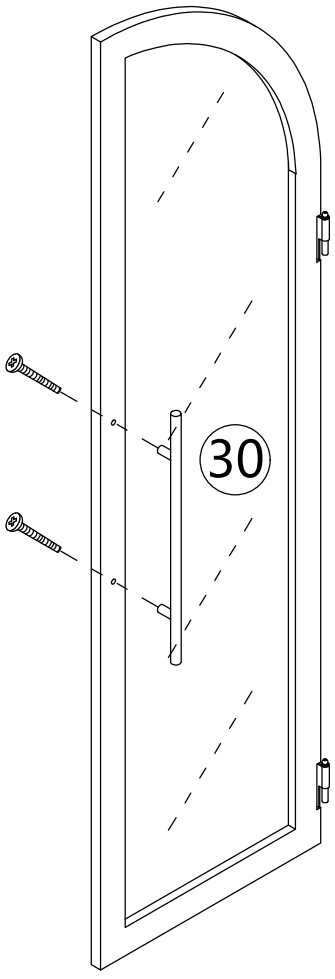

Step 56

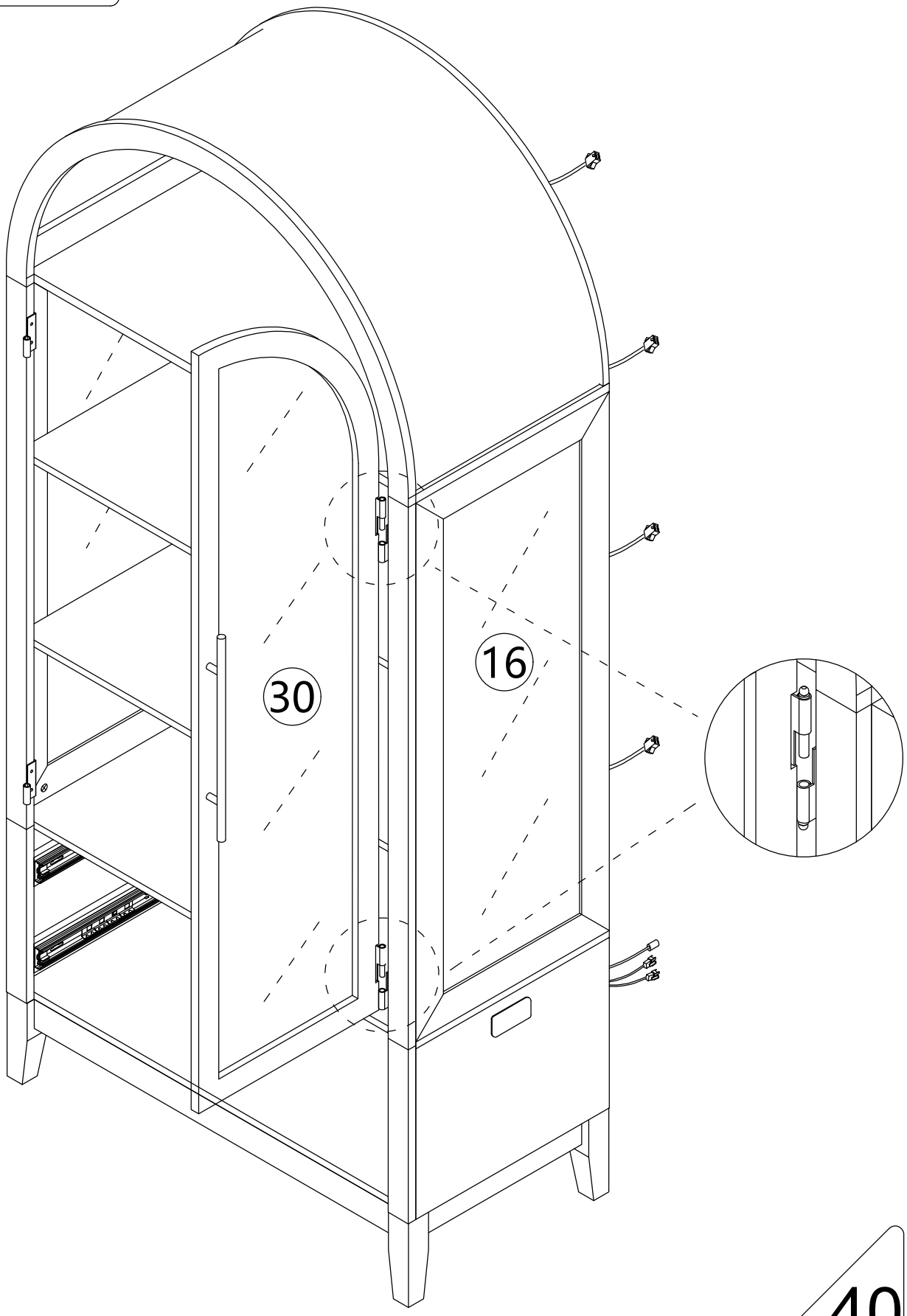

Step 57

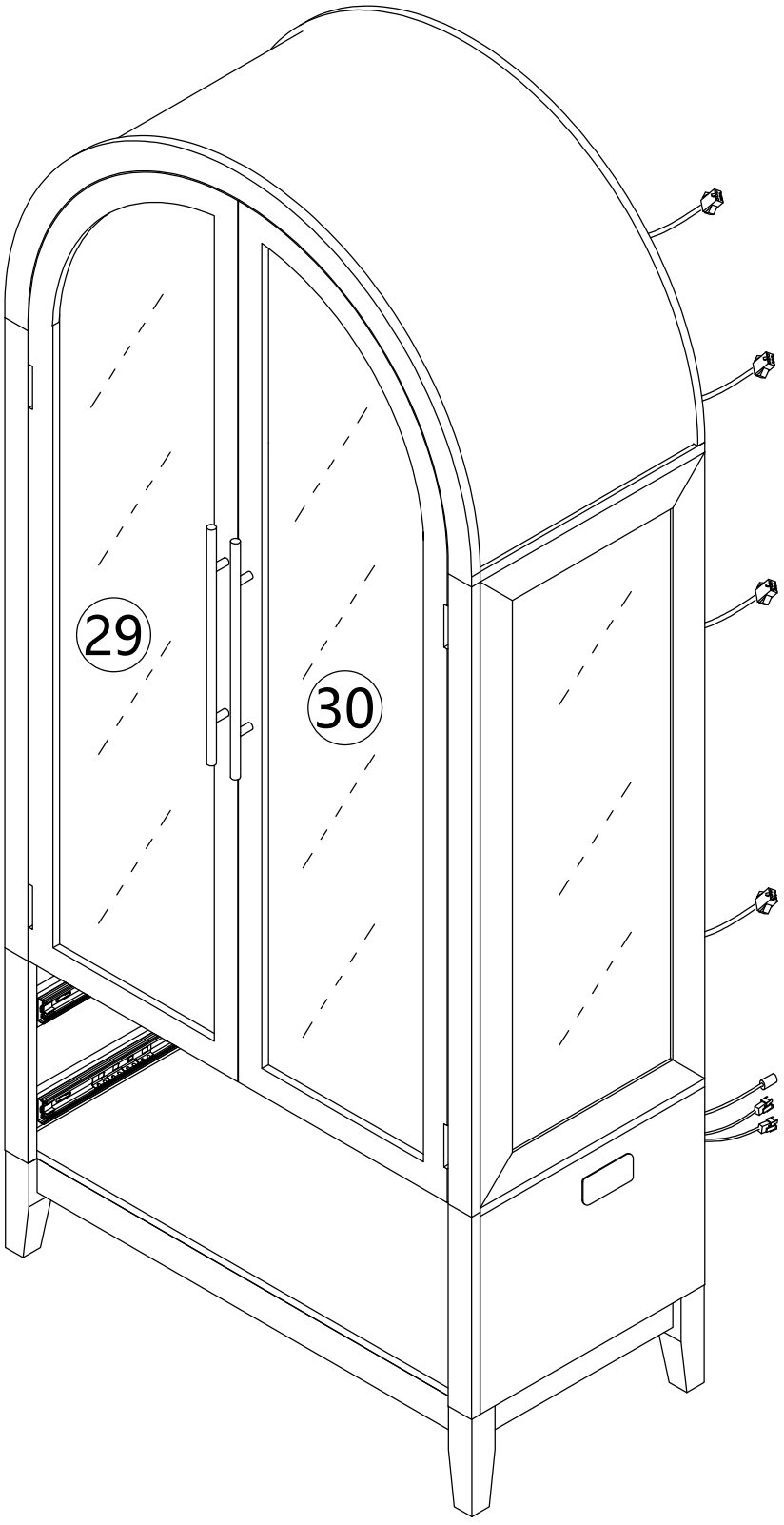

The 29th board is also installed in this way.

Step 58

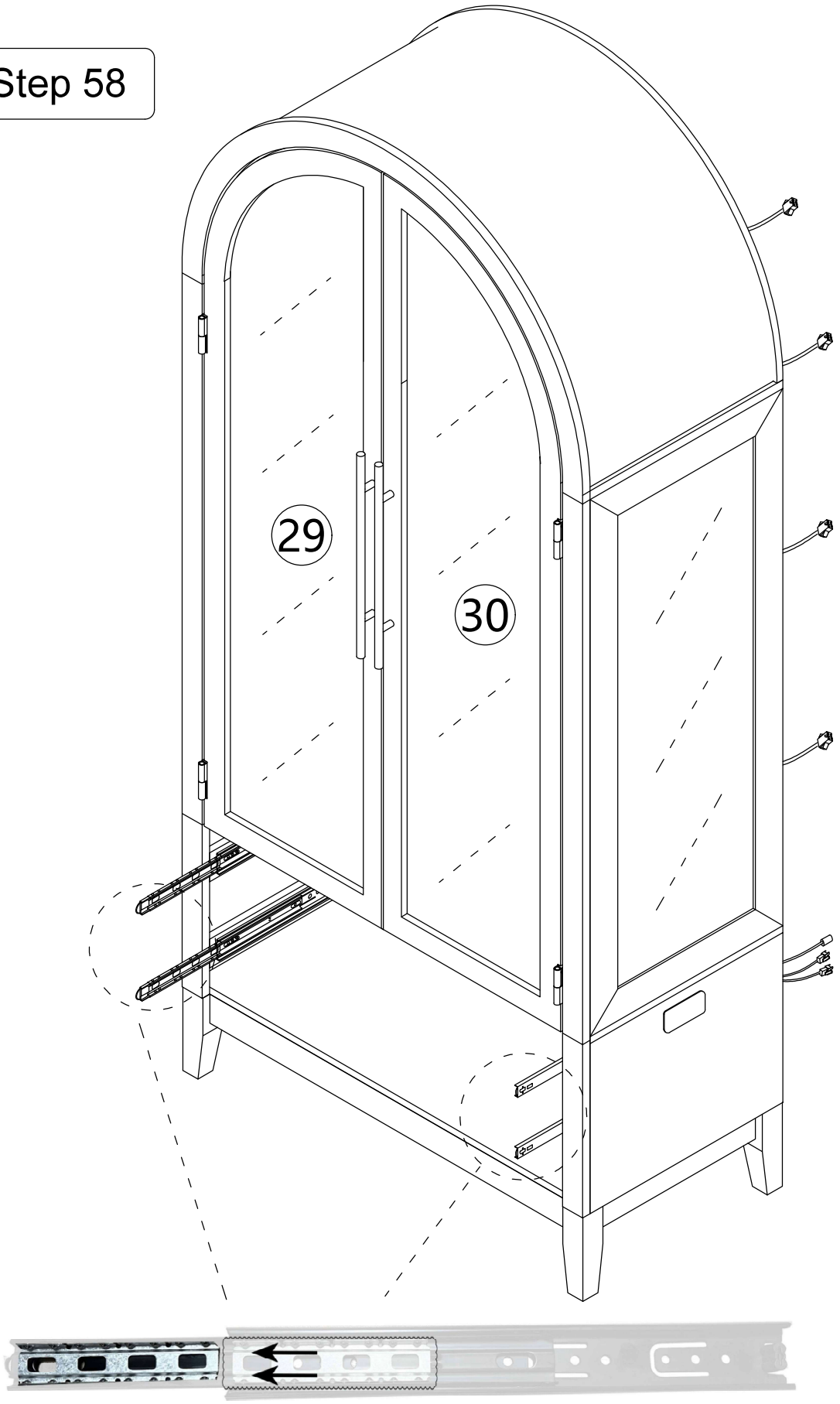

As shown，When installing the drawer,
pull the guide rail out first, Slide beads are also pulled out.

Step 59

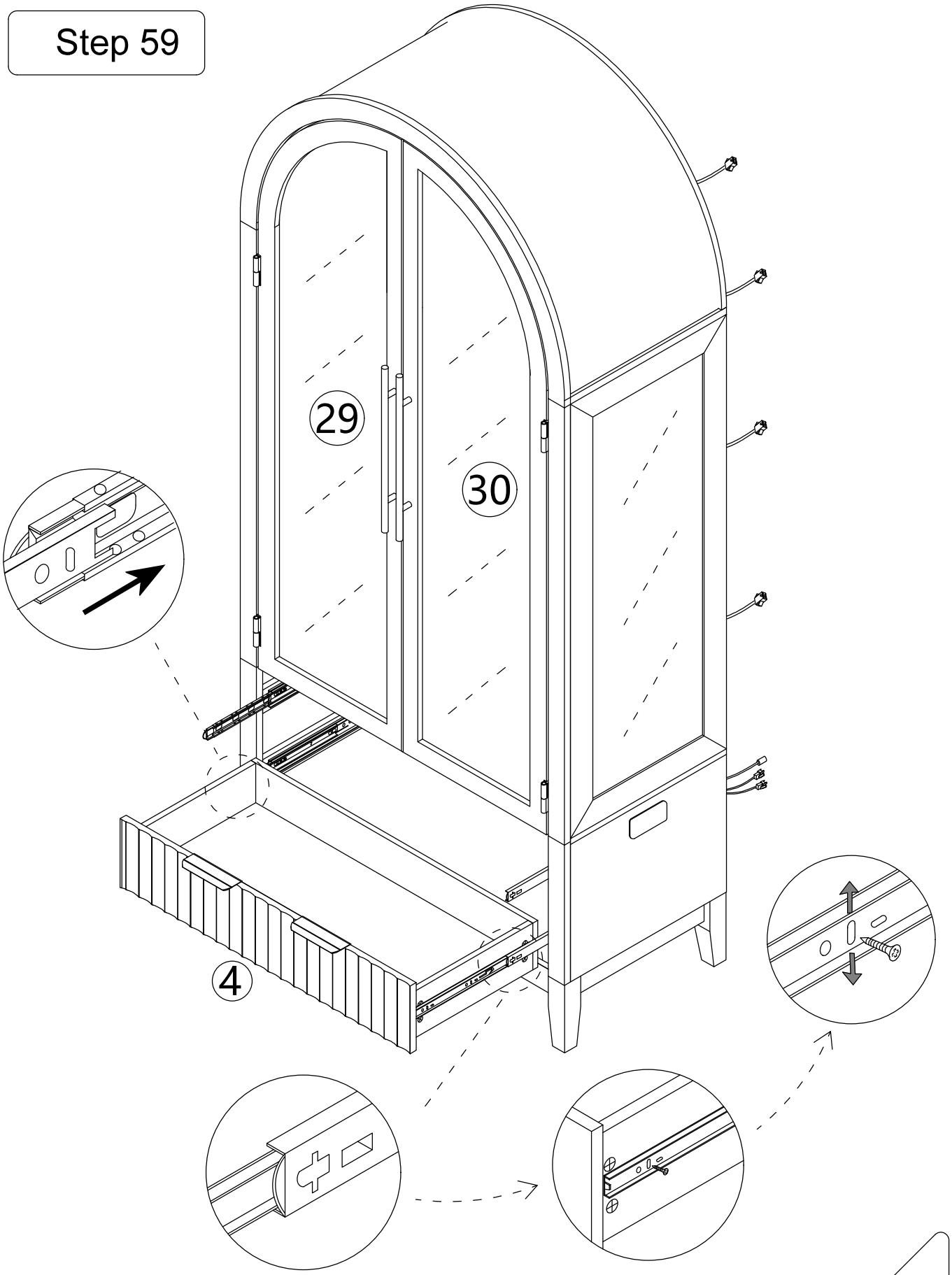

If a large gap is found after installing the drawer the slide rail can be moved up and down to adjust the gap

Step 60

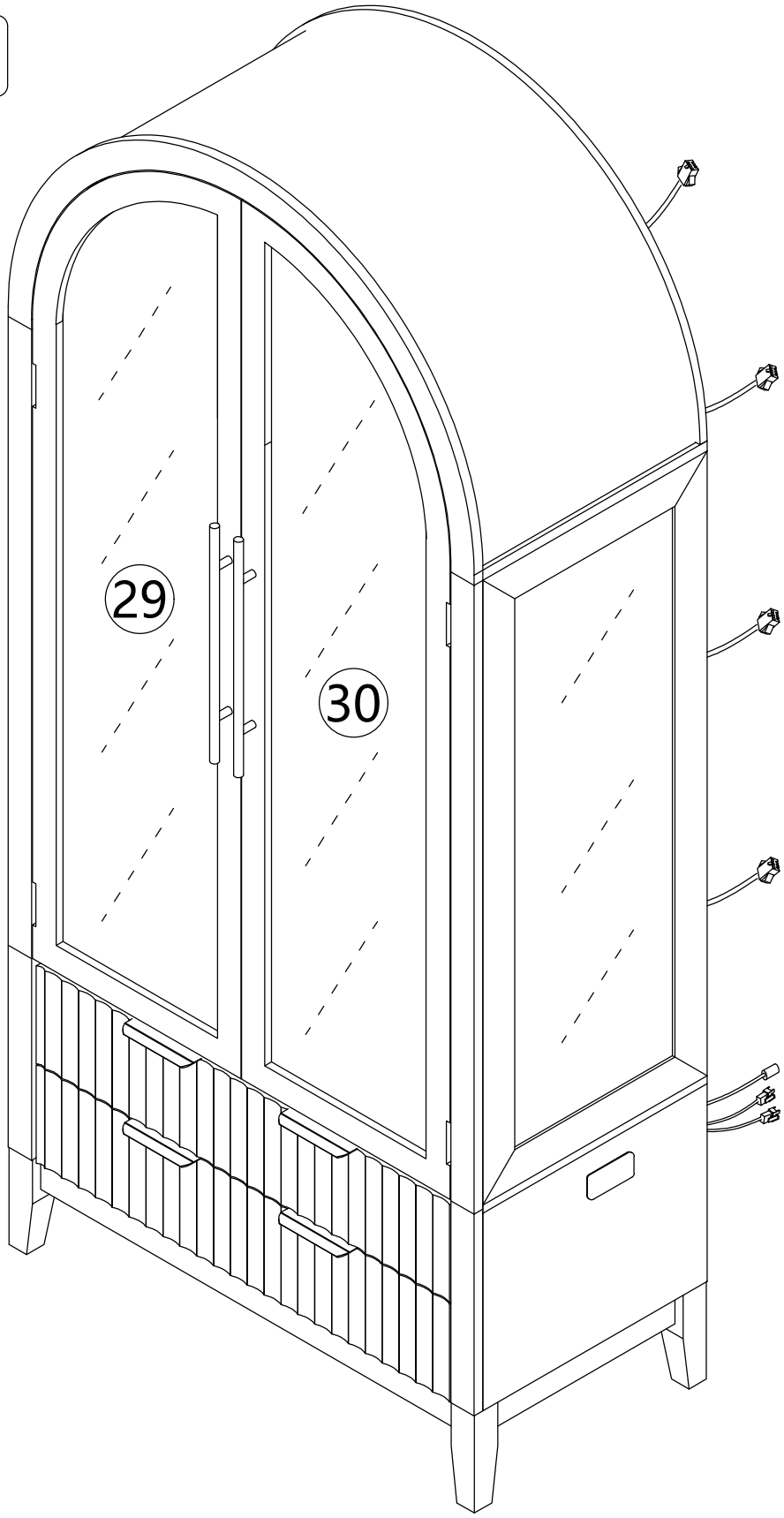

Repeat the drawer installation steps

Step 61

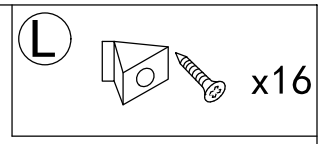

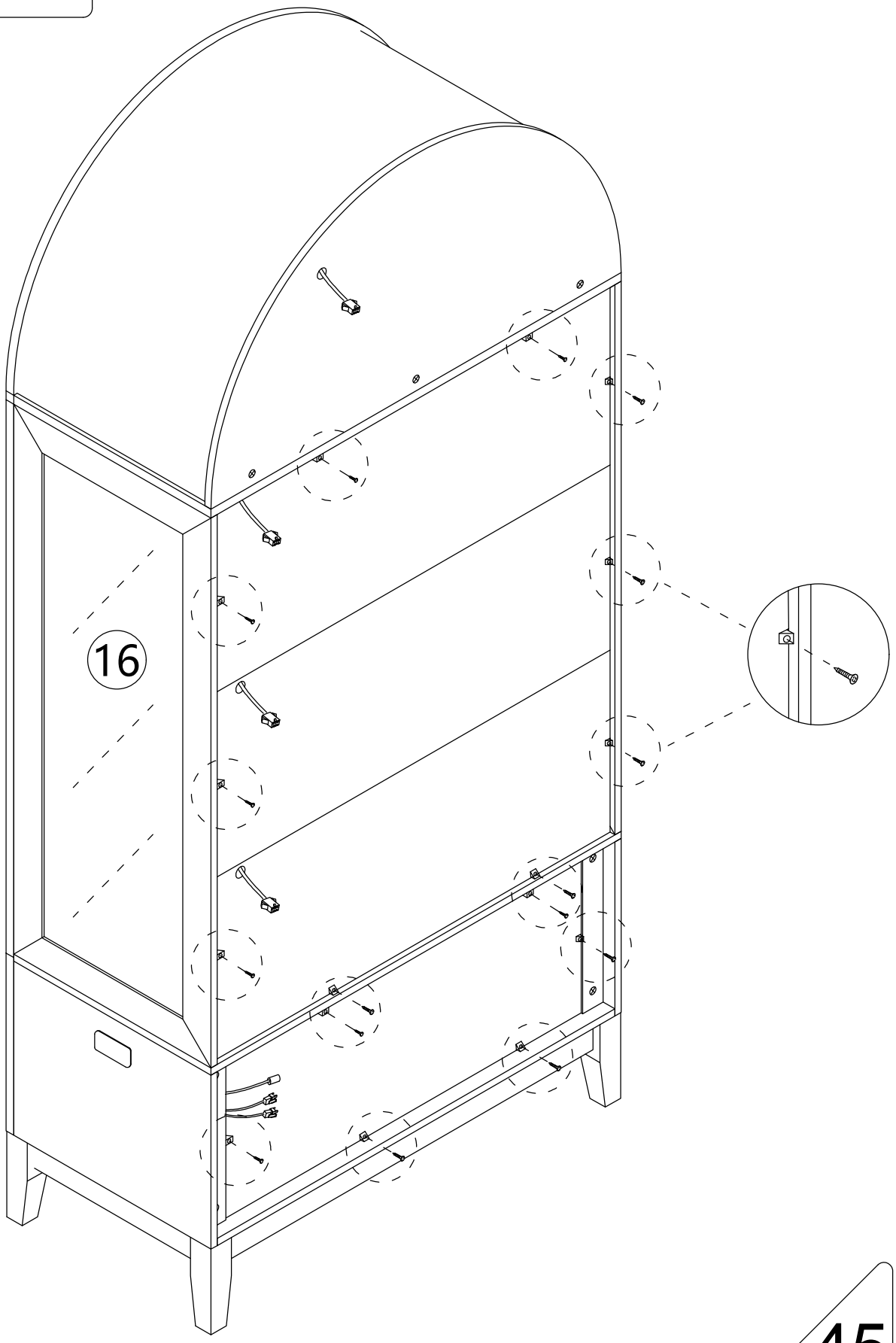

Step 62

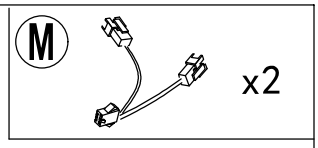

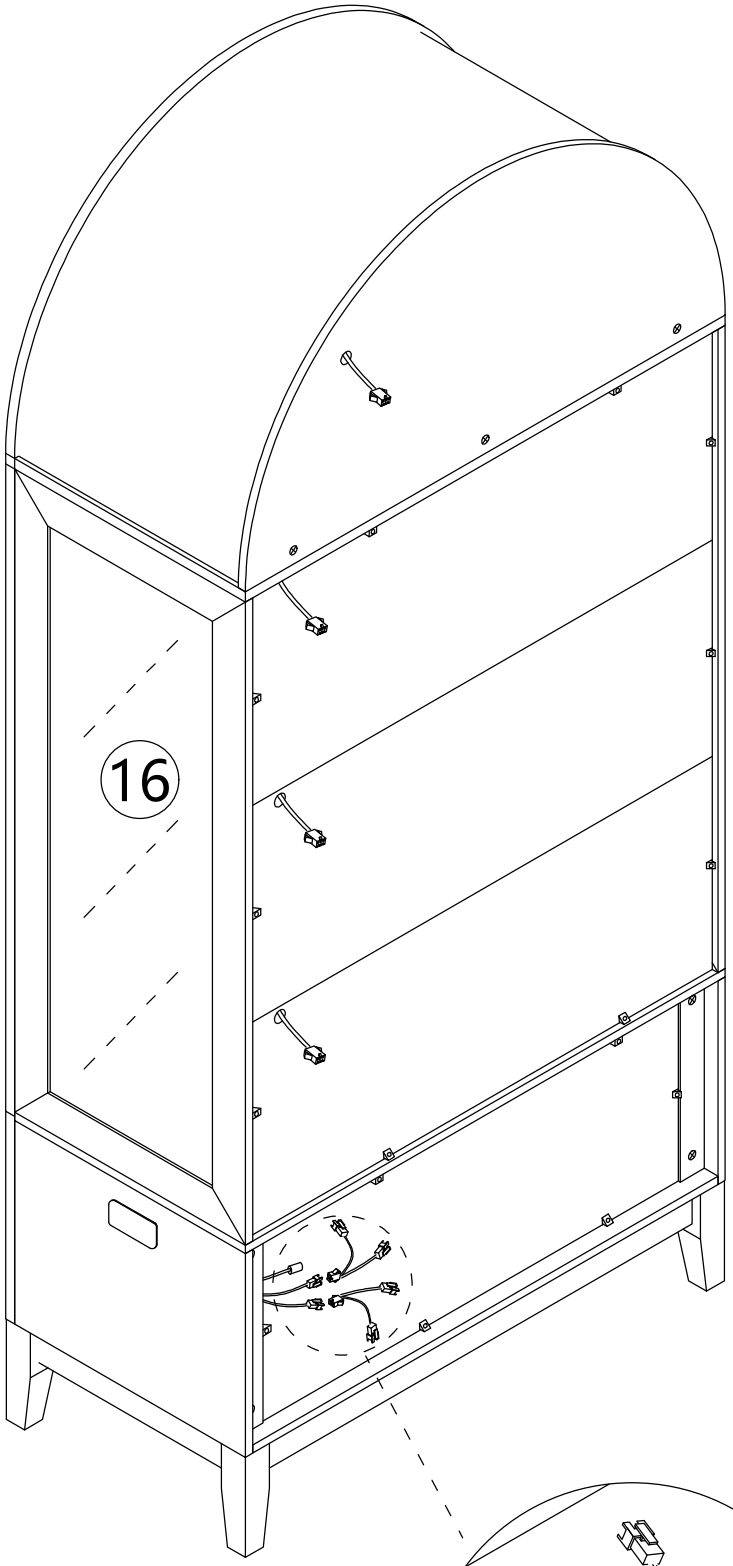

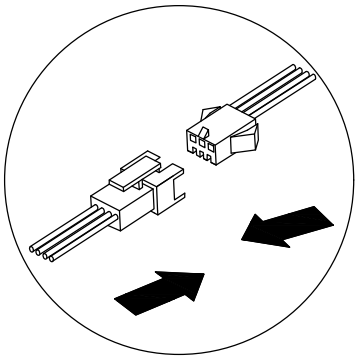

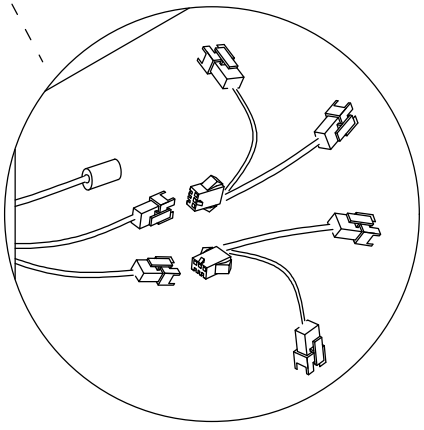

Step 63

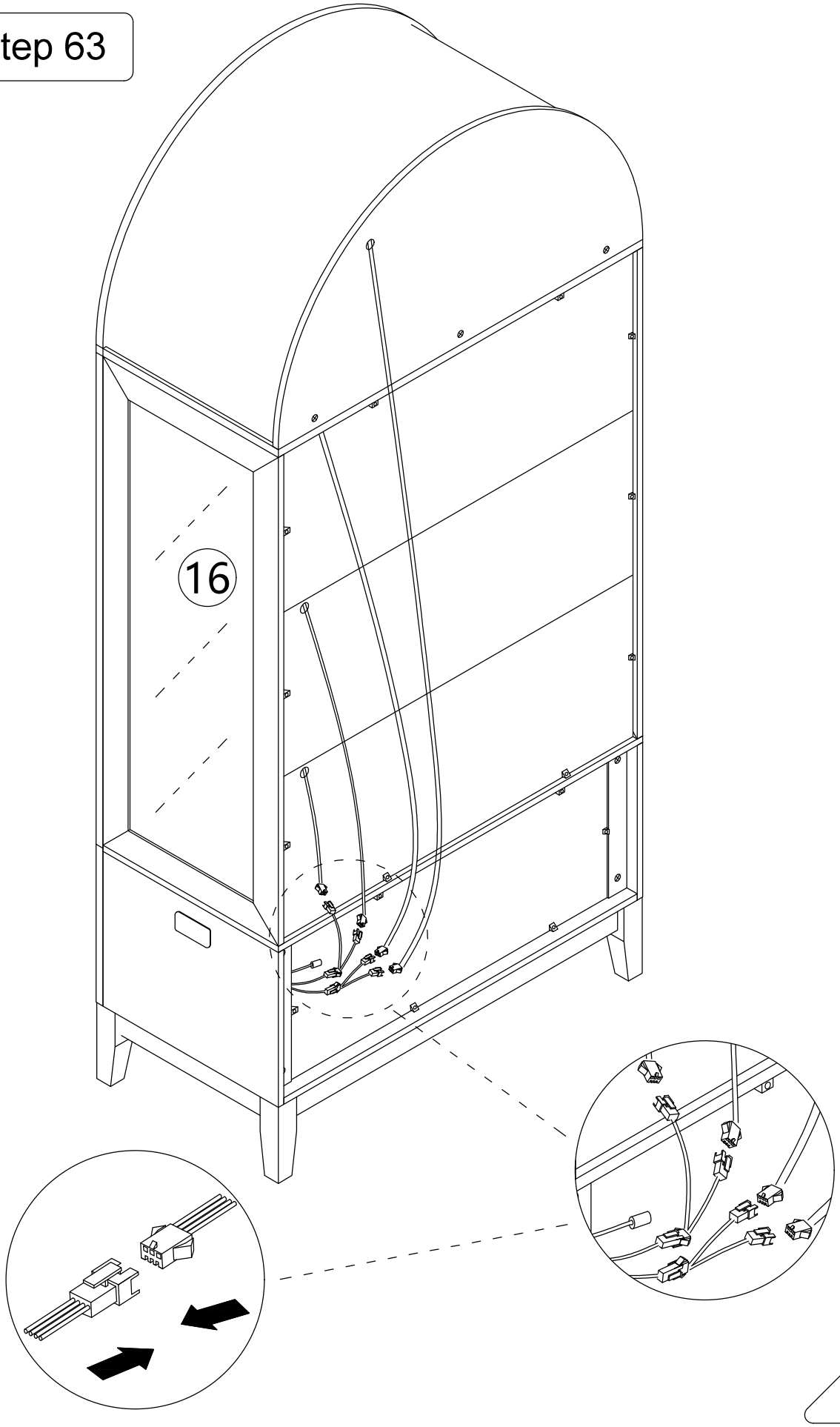

Step 64

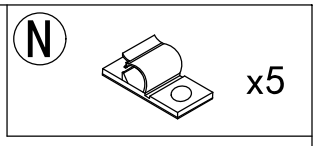

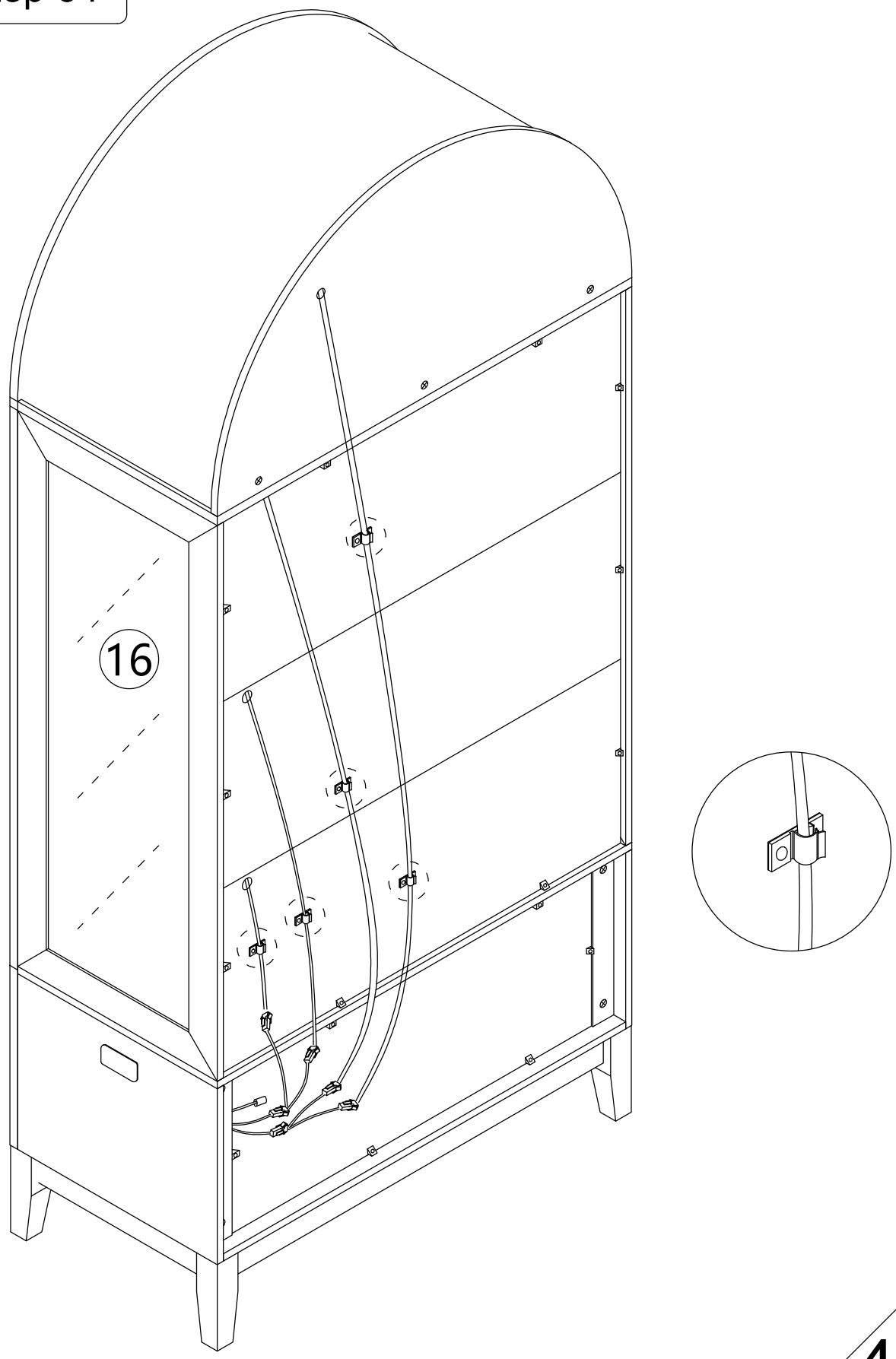

Step 65

Install the anti-rewind tape on the 28 board.

Q

x1

x1

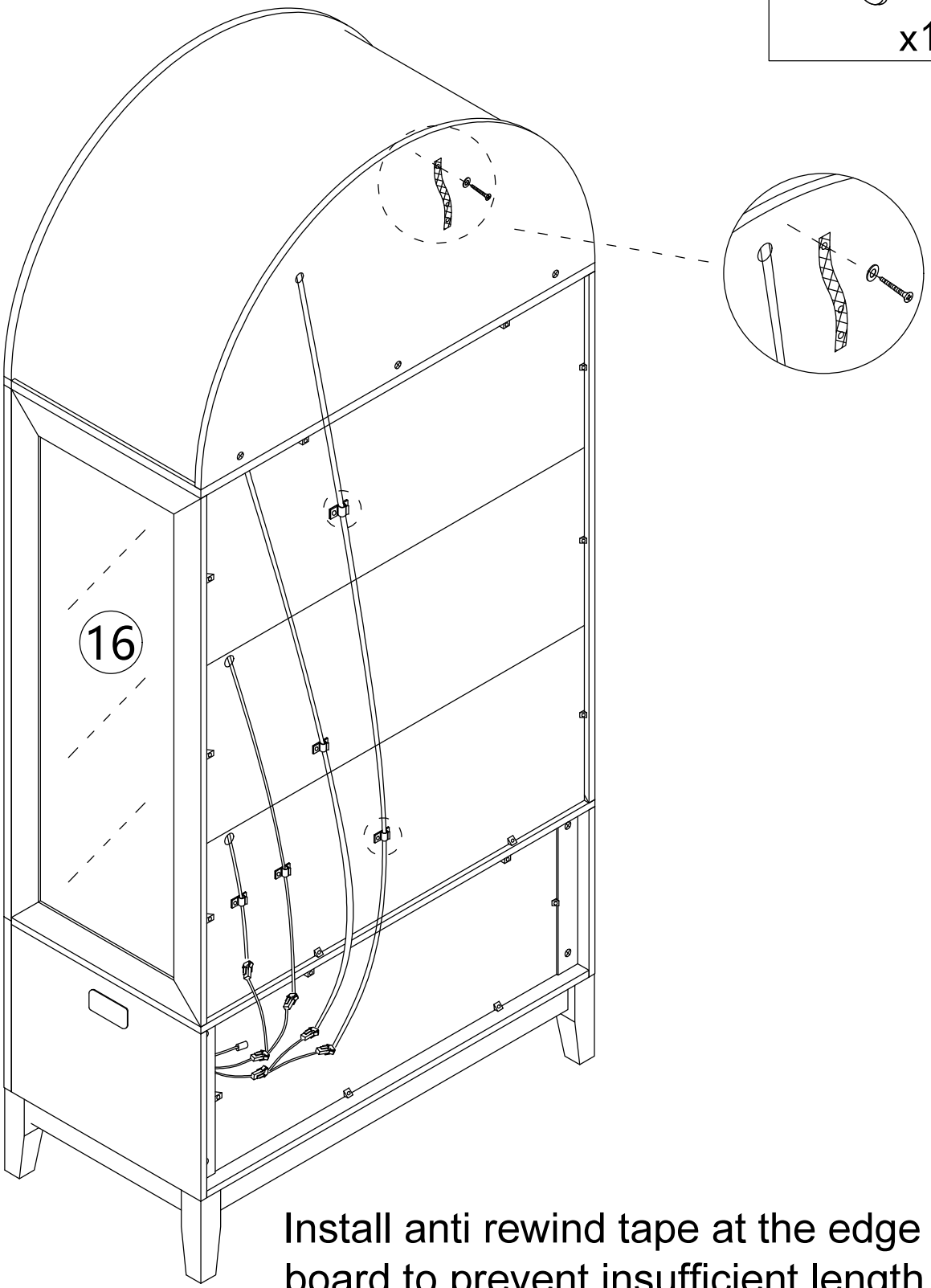

Install anti rewind tape at the edge of the board to prevent insufficient length when connecting to the wall

R x4

Step 66

Use a hammer to drive the nail into the gap of the wooden board and fix the back board

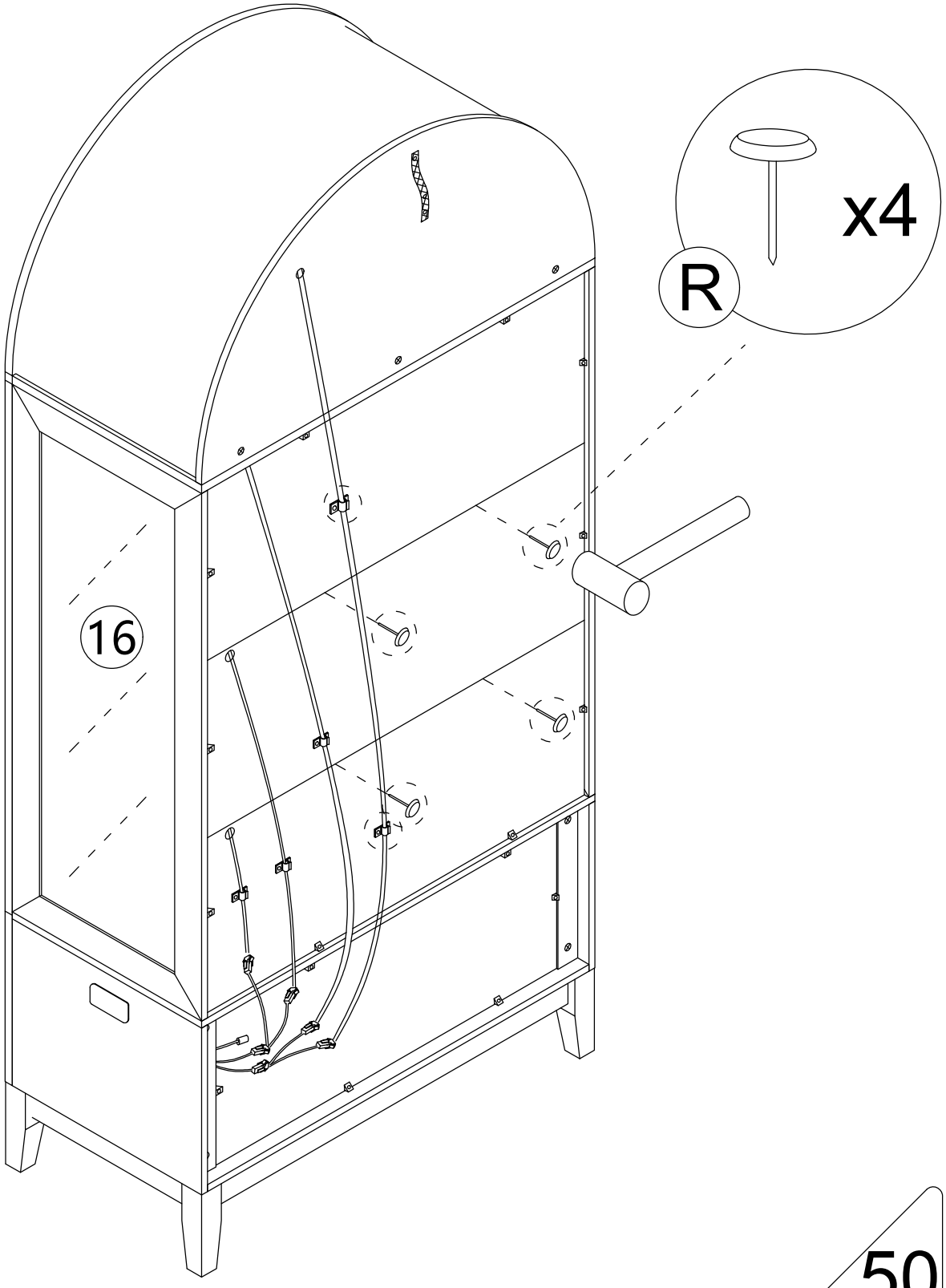

Step 67

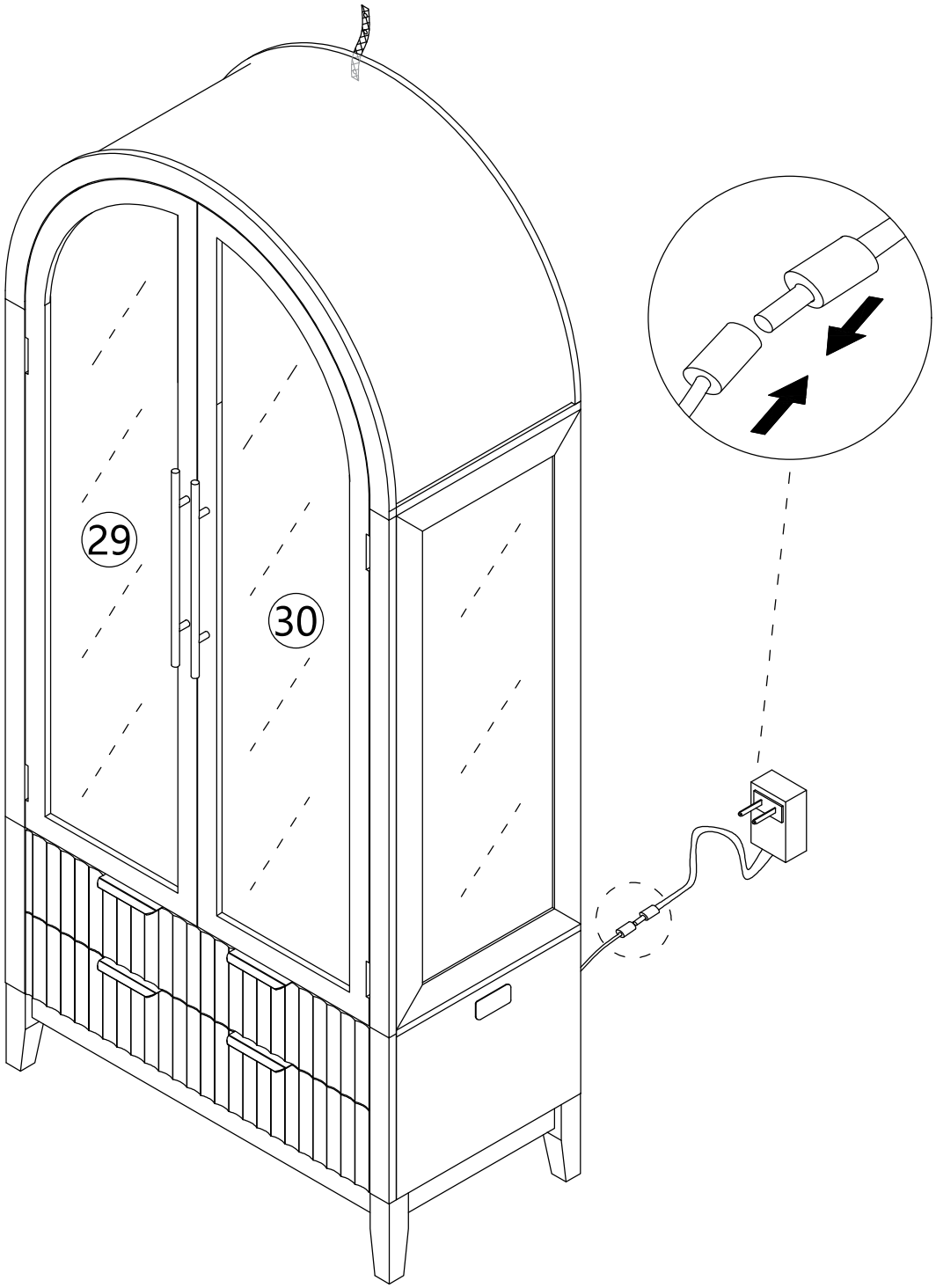

Step 68

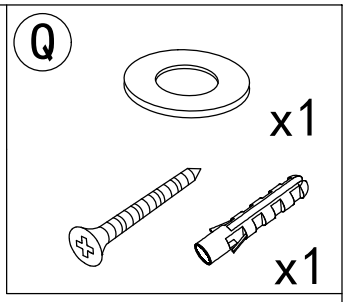

use a ruler to measure theapproximate height of the producton the wall, and then mark it witha pencil.

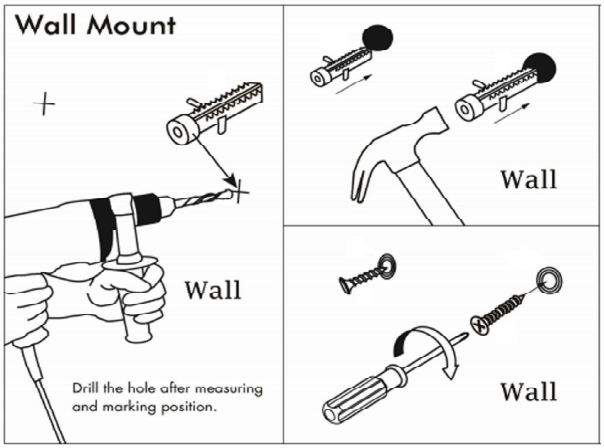

Put the expansion bolt into the hole.

Pass the matching screws throughthe "anti-rewind" and tighten themto fix them on the wall.

Use a tape drill to make holesin the wall that are suitable for theproduct screws.

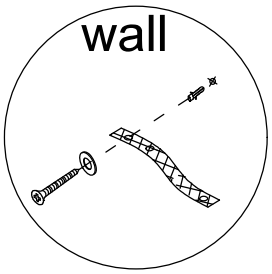

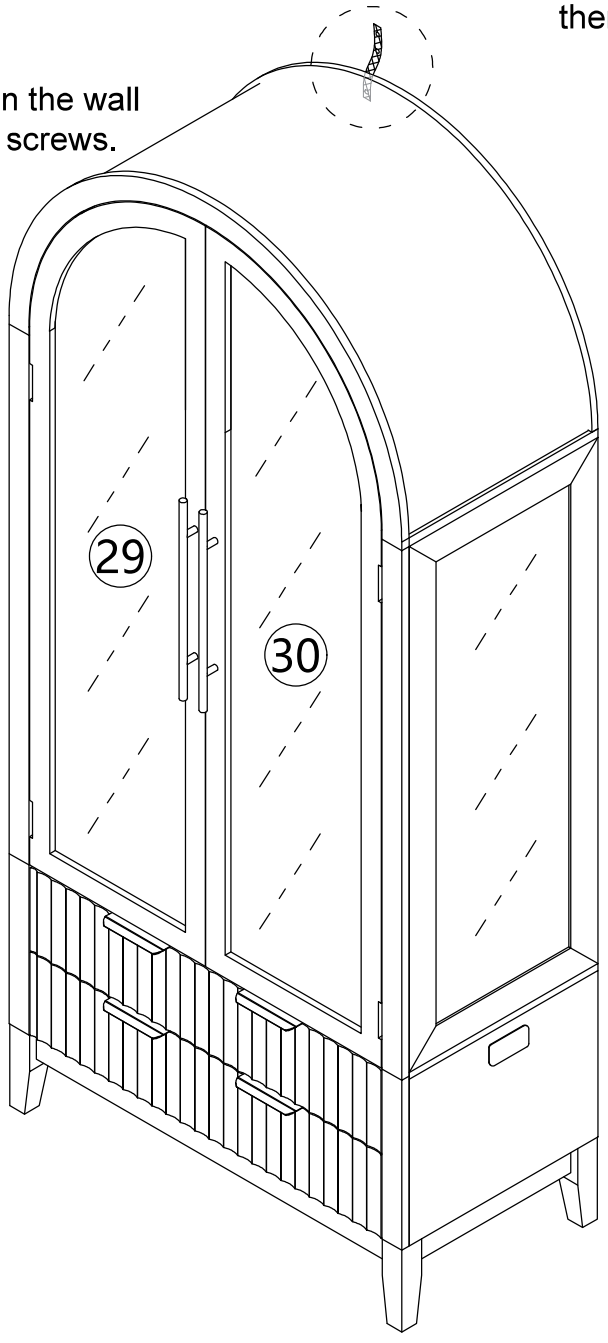

Smart Box Plug Power Off

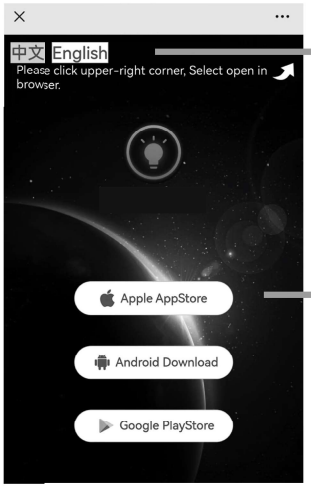

Select English Language

Select the corresponding device to download.

Note: If the download fails,
please turn off the "Enhanced Protection"
in the Pure Mode settings of the device.

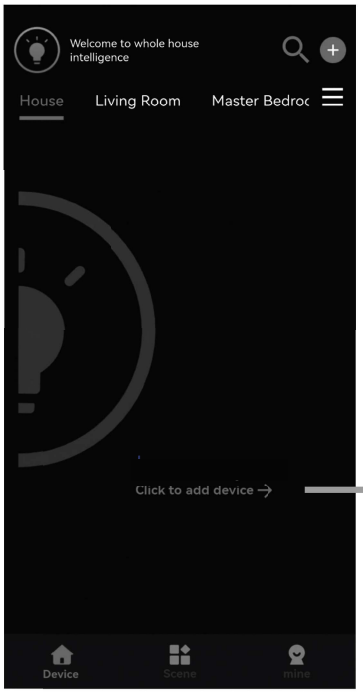

1

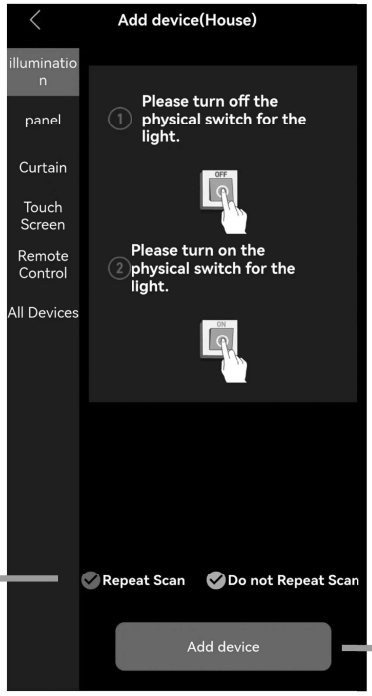

2

It turns blue after clicking

3

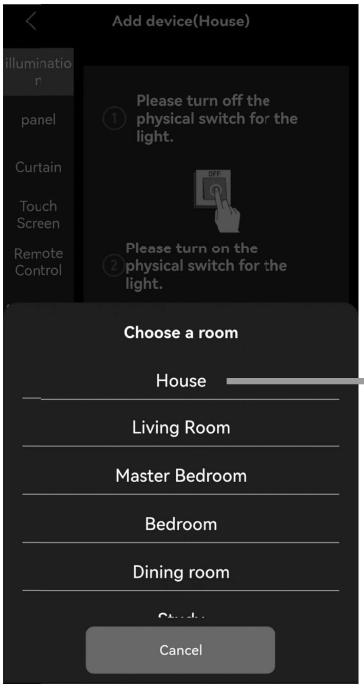

4

5 Unplug the smart box

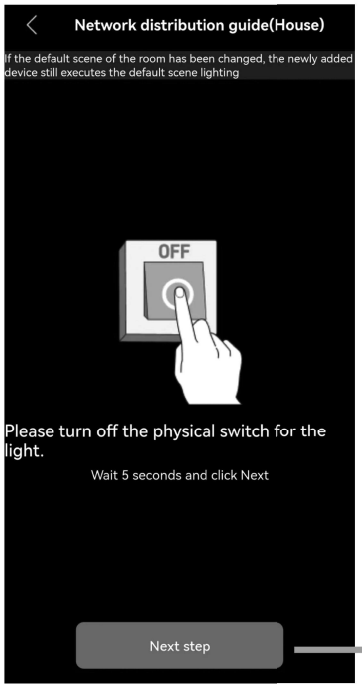

6

⑦Plug in the smart box power plug.

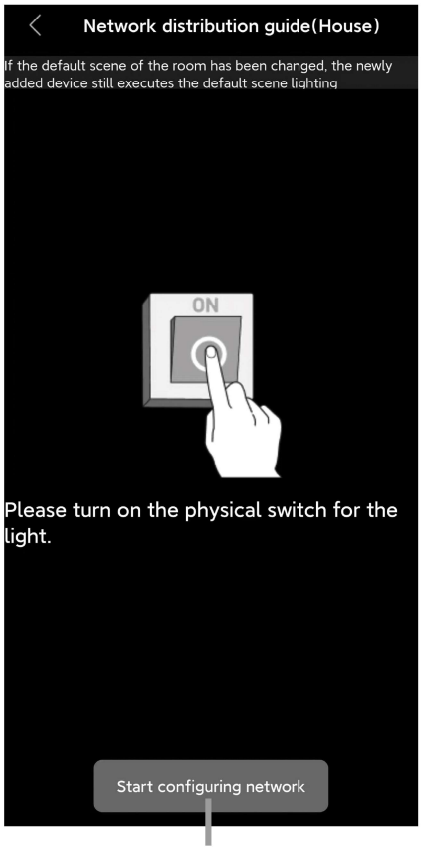

⑧

The appearance of this program icon indicates that the matching is complete

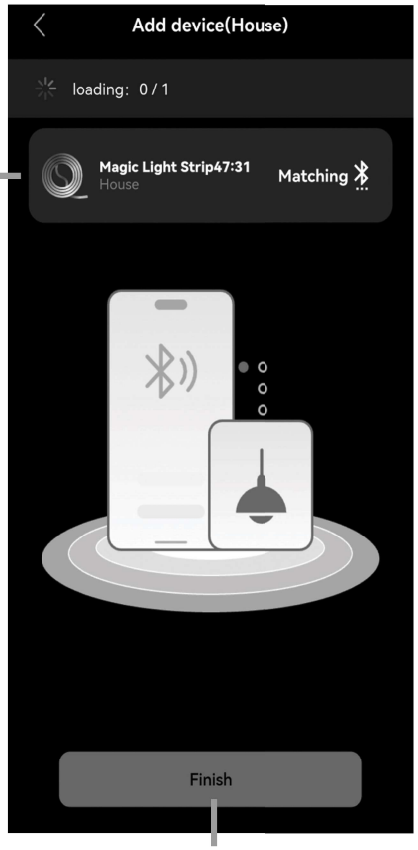

⑨

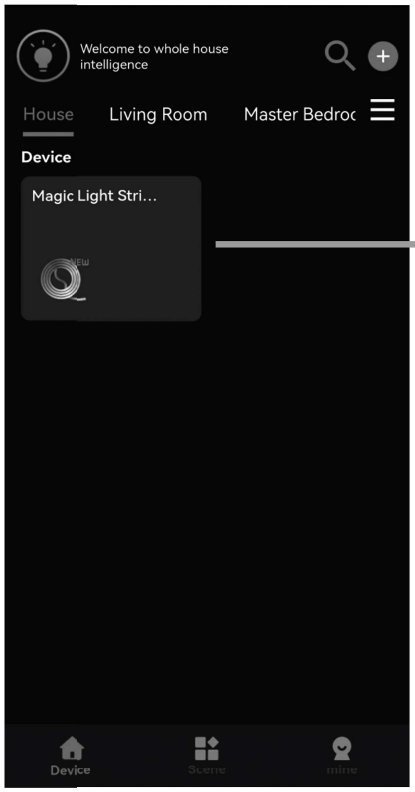

⑩

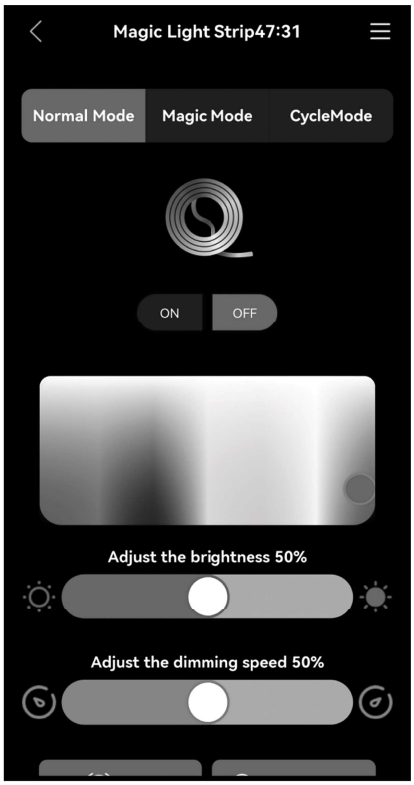

Now you can freely adjust the lighting according to your preferences

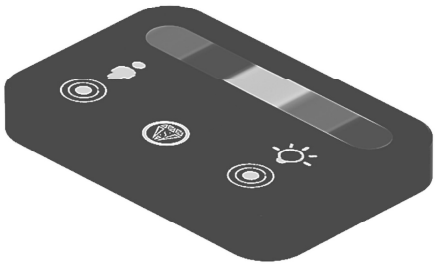

User's Guide

Thank you for purchasing this product.

To use this product, please plug it into a 12V DC power supply.

Please use if the product works normally after connecting to power.

Introduction

The box is an intelligent controller. With 4 touch buttons,
it can turn ON/OFF the light and turn ON/OFF the induction function,
change light colors, and adjust the light luminance.
The lights can be controlled through both the touch buttons and a dedicated app.

Operation

This touch button is used to turn the light on/off, adjust brightness, and switch the color of the lights.

i. Single Click: Turn the light on/off.

ii. Quick Double-Click: Switch between 7 static RGB colors.

iii. Long Press (2+ seconds): Adjust the light luminance.

This touch button is used to turn on/off the induction function.

A.touch this button once to turn on the induction function (indicator light on).

After the person leaves or remains stationary for more than 30 seconds, the light strip goes out; people and objects within a range of 1 meters move will light up the light strip.

B. Long press this button for 0.5 seconds to turn off the human body induction function(the indicator light goes out).

At this point, Keep the light strip as it was before turning off and no longer be affected by humanand object activities.

By default, induction function is enabled when powered on.

This touch button is the Dynamic Phantom Color Mode, which includes 5 magical lighting effects.

Simply tap to cycle through the options.(Attention:This mode cannot adjust the brightness)

This area controls the color switching function.

You can tap or slide to any color bar position to change the color.

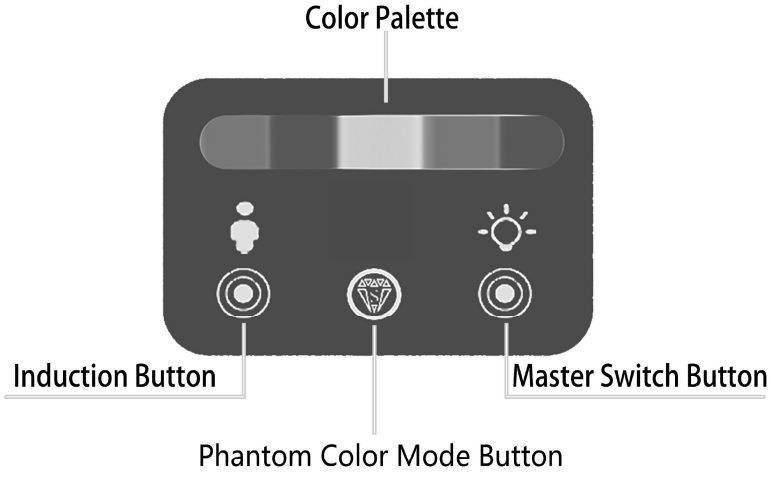

ATTENTION PLEASE

1. If there is no touch response suddenly, Re-plug the power to reset the touch static electricity.
2. If bubbles appear on the panel, remove the protective film.
3. If you have any questions when installing, please feel free to contact us. Thank you.