Installation Instruction

Part List and Hardware List

PIECE	PICTURE	DESCRIPTION	QUANTITY
A		Mounting Bracket	1X
B		M4 Mounting Bracket Screws	2X
C	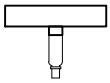	Ceiling Canopy	1X
D		Nut	2X
E	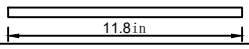	11.8" Round Tube	3X
	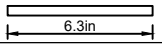	6.3" Round Tube	1X
F	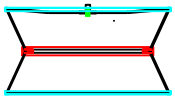	Lamp Body	1X

PIECE	PICTURE	DESCRIPTION	QUANTITY
G		Short Round Tube	1X
H		E12 Socket	1X
O		Wire connector	3X
P	black	wire	1X
Q	white	wire	1X
R	earth wire	earth wire	1X

1

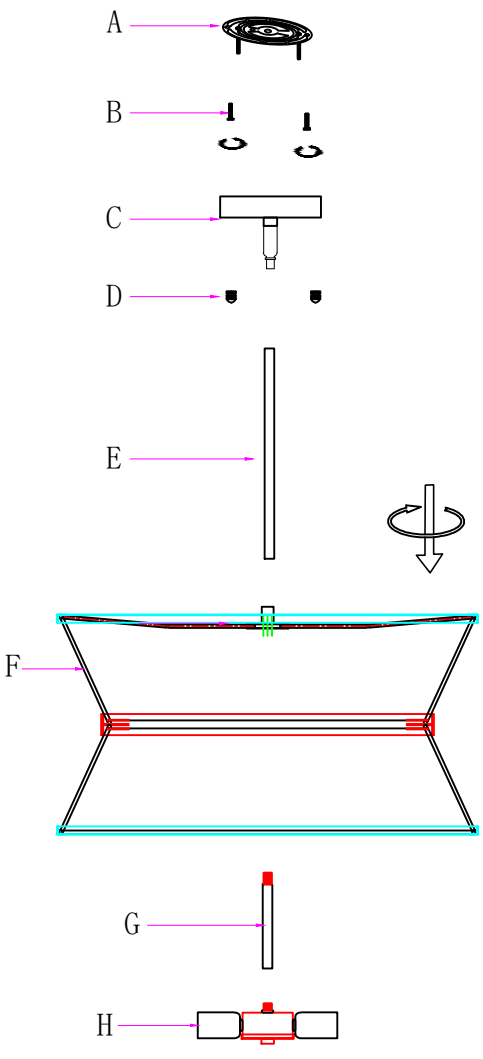

2

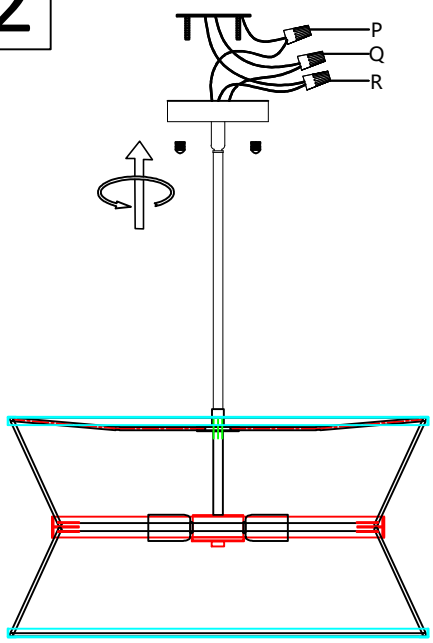

Step 2:
1.Secure the Mounting Bracket (A) to the ceiling using M4 Mounting Bracket Screws (B).
2.Connect the lamp power cord to the reserved power supply wire, making sure to distinguish between the positive and negative poles.
3.After the wiring is properly connected, lock the Ceiling Canopy (C) firmly onto the Mounting Bracket (A) with the Nut (D).

3

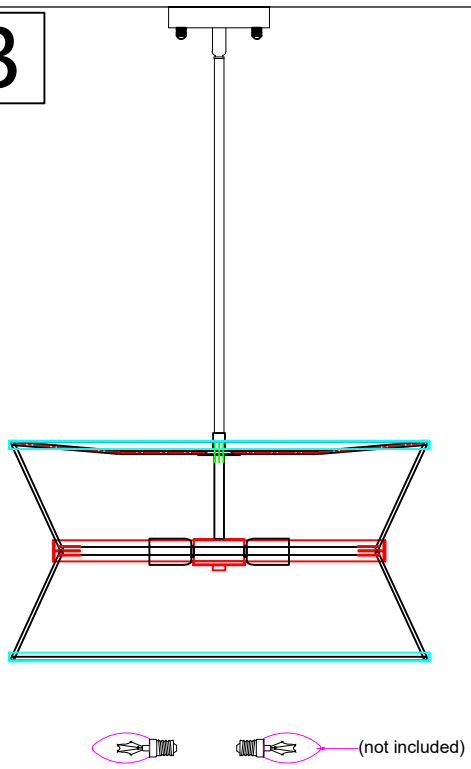

Step 3:
1.Finally, install the E12 bulbs (bulbs not included).

Step 1:
1.First, connect one end of the Short Round Tube (G) to the E12 Socket (H), and the other end to the Lamp Body (F).
2.Select the appropriate length of Round Tube (E), and connect its two ends to the Lamp Body (F) and Ceiling Canopy (C) respectively.