Assembly Instructions

Caution : You must read this before you proceed

Care & Maintenance

- ⊘ Not for commercial use. For residential use only.
- ✓ Furniture may scratch floors. We recommend using furniture pads to protect your floors.
- ⊘ Do not put hot items directly on furniture surface.
- ⊘ Do not clean furniture with harsh cleansers or polish.
- ⊘ Do not place furniture under direct sunlight.
- ⊘ Do not place furniture near heating or cooling vents.
- ⊘ Do not write on furniture without a padded barrier to protect the surface.
- ⊘ Do not place furniture outside . For indoor use only.
- ⊘ Stains may be removed with mild soap solution and damp cloth.
- ⊘ Children should not climb or jump on the furniture.
- ✓ Dust and pick-up spills using a clean, non-colored, lint-free cloth.

Please look in carton for hardware packs and legs.

DINING TABLE

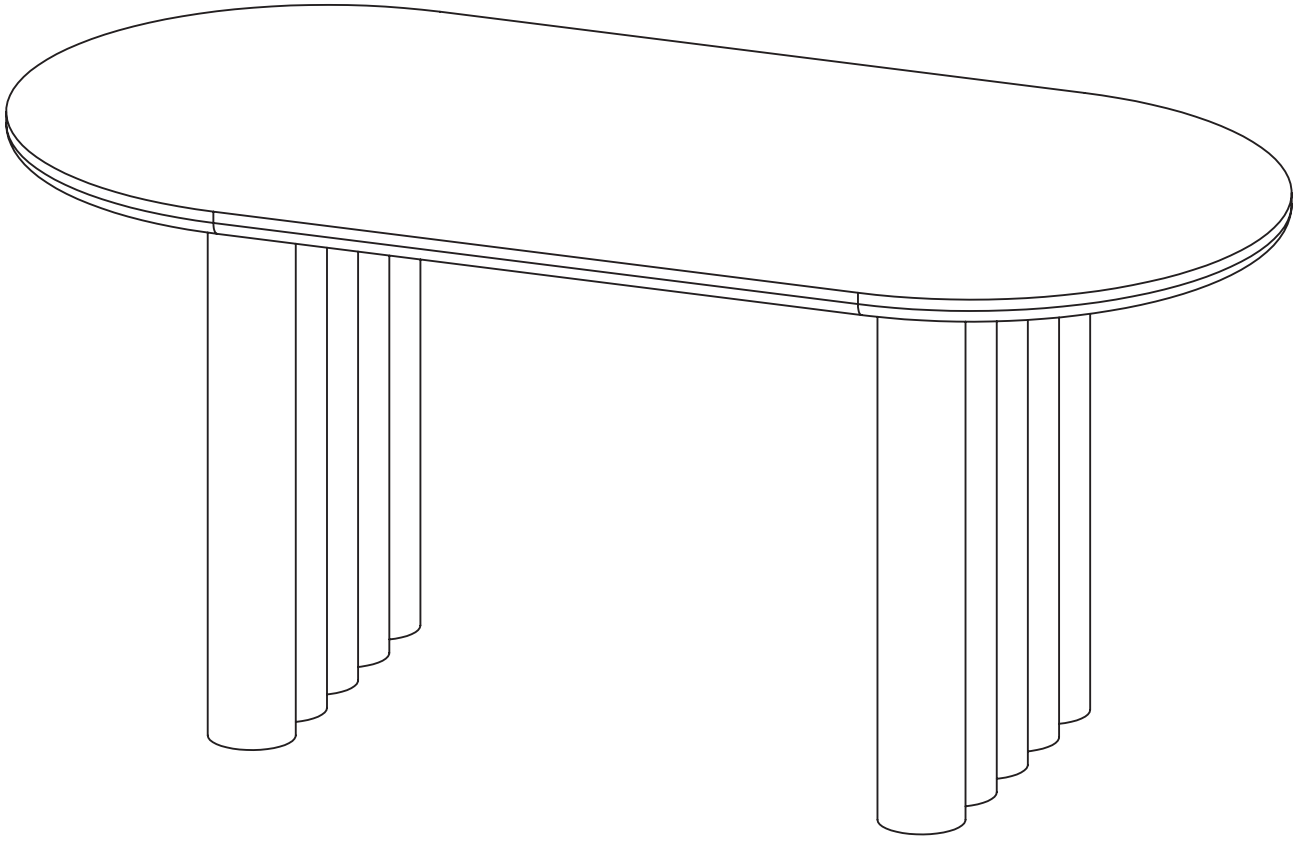

Parts List

Label	Picture	Description	QTY
Ⓐ	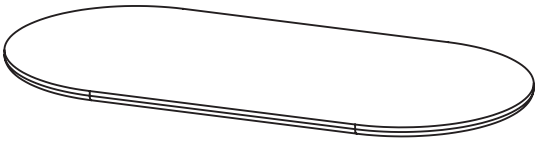	Top Panel	1
Ⓑ	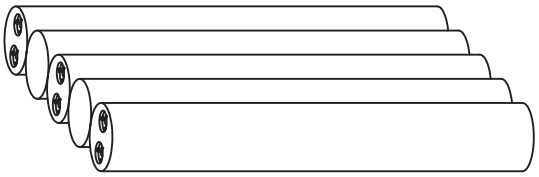	Leg	2
Ⓒ	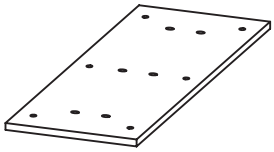	Panel	2

Hardware

Label	Picture	Description	QTY
①		Bolt (M8*30mm)	12+1
②	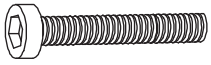	Bolt (M8*40mm)	12+1
③		Flat Washer	24+2
④		Spring Washer	24+2
⑤		L-type Hexagon Wrench	1

Assembly Preparation

Before Beginning Assembly:

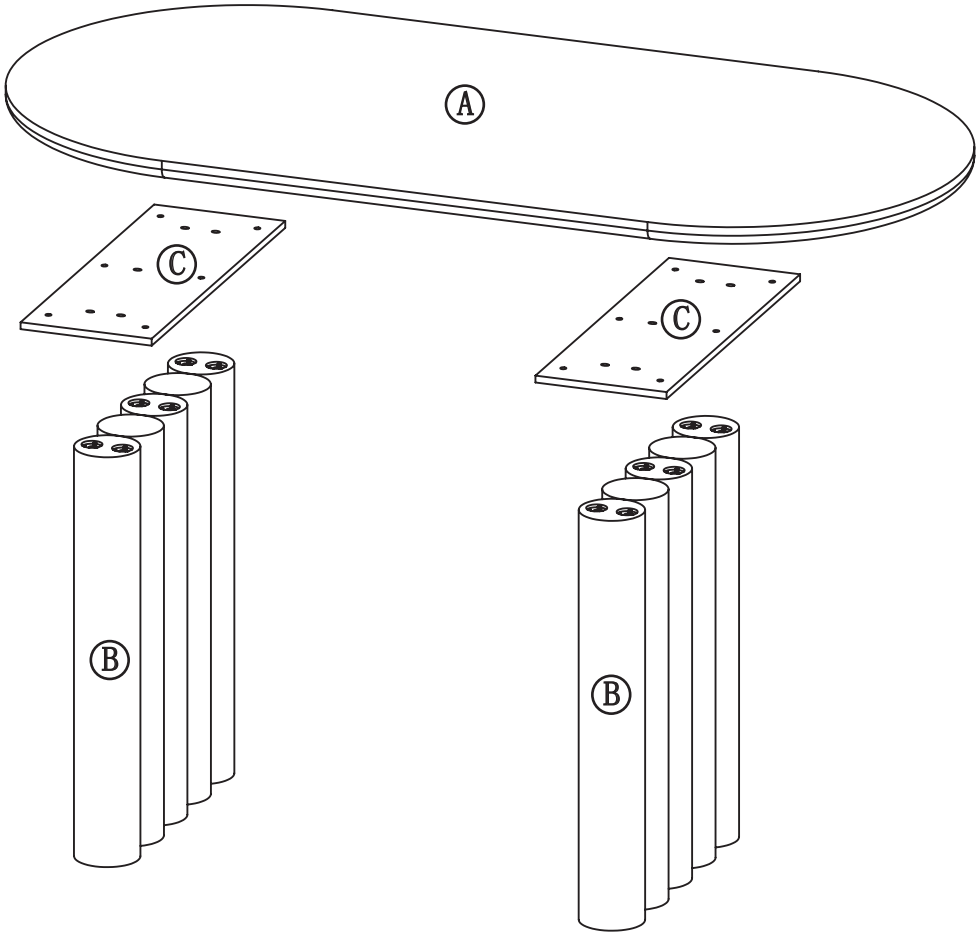

① x13 ② x13 ③ x26 ④ x26 ⑤ x1

- Read instructions,cover to cover-
- Have 2 adults on hand for assembly-
- Do not assemble on flooring or carpet-
- Assemble on a clean non-marring surface (packing foam)-
- Save all packaging until finished-

Assembly Steps

Overview

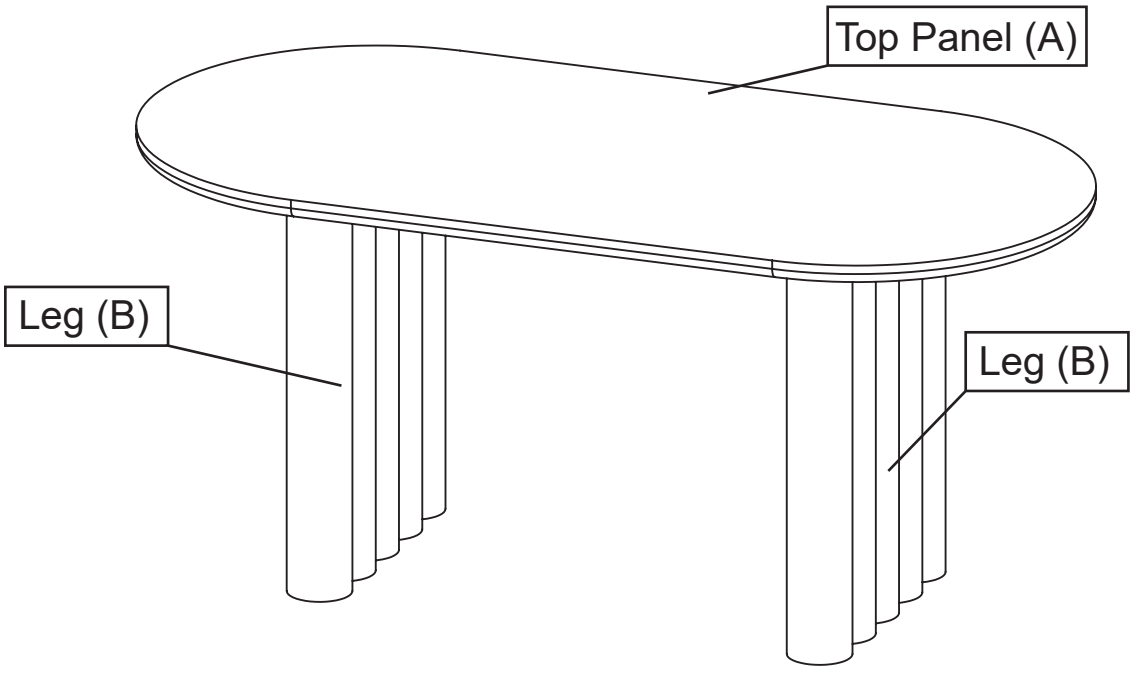

Front Facing

This Table has multiple parts and may require up to 30 minutes to assemble.To give you an overview of the Table parts, the above picture is to help you put the various parts into perspective. Please read through the instructions below to familiarise yourself with the parts and steps before assembly.

Step 1

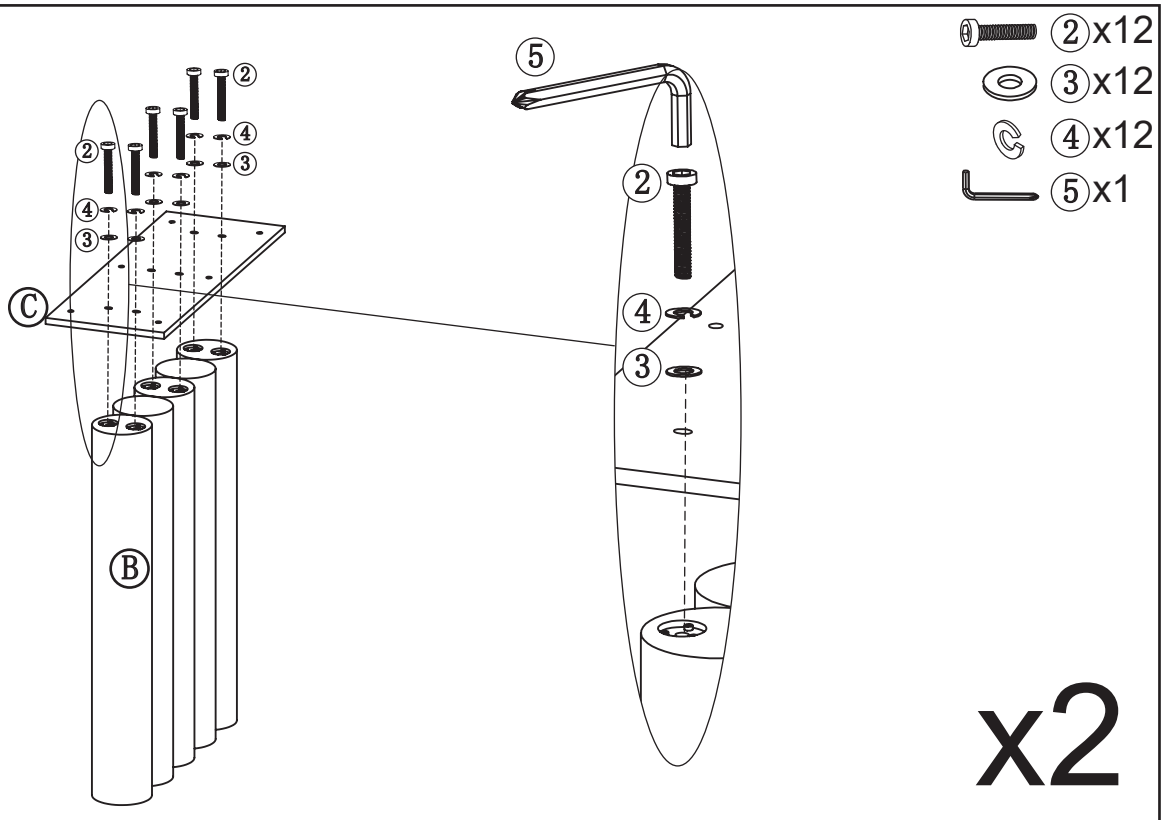

Attach the leg (B) to the panel(C) with bolt(②),spring washer (④) and flat washer(③) using L-type hexagon wrench(⑤).

Step 2

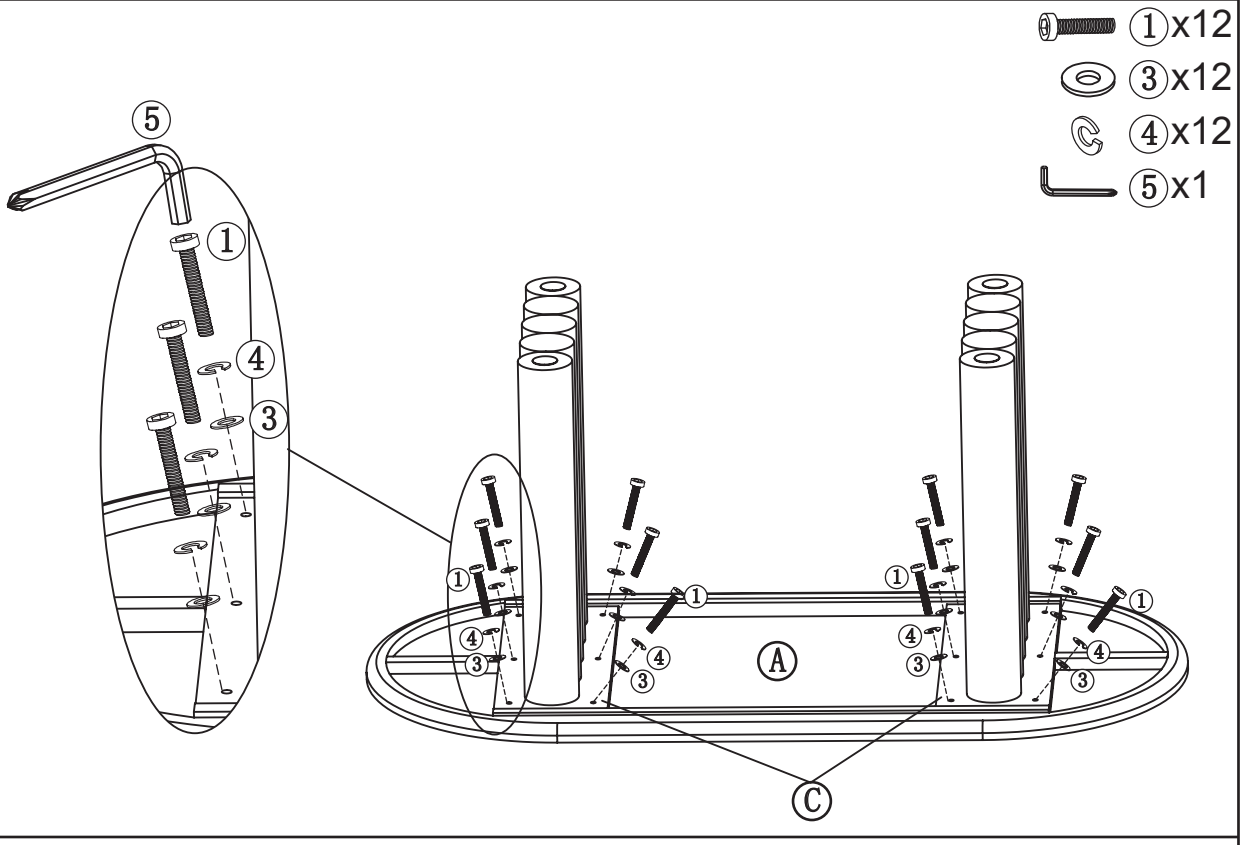

Attach the top panel (A) to the panel(C) with bolt(①),spring washer (④) and flat washer(③) using L-type hexagon wrench(⑤).

Step 3

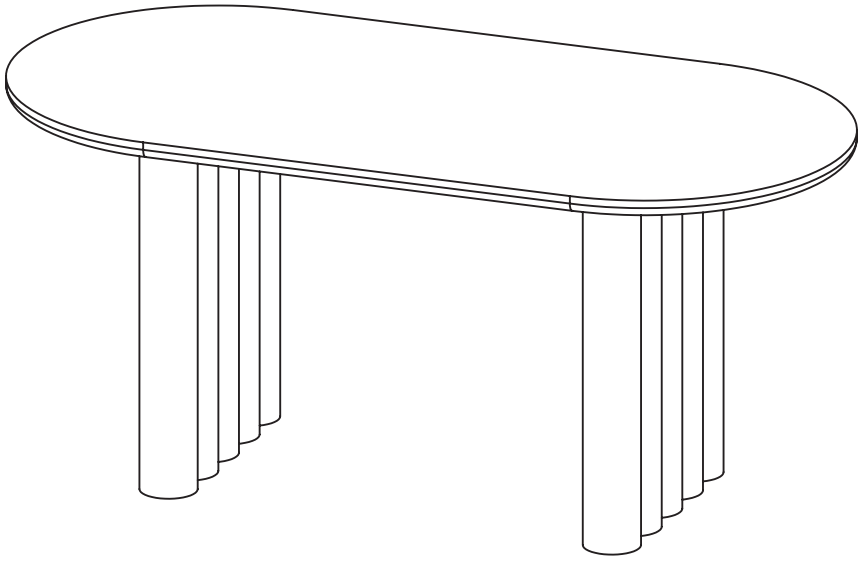

Your dining table is ready for use.

Questions & Answers about Proposition 65

• What is Proposition 65?

Proposition 65 requires businesses to provide warnings to Californians about significant exposures to chemicals that cause cancer, birth defects or other reproductive harm. These chemicals can be in the products that Californians purchase, in their homes or workplaces, or that are released into the environment. By requiring that this information be provided, Proposition 65 enables Californians to make informed decisions about their exposures to these chemicals. Proposition 65 also prohibits California businesses from knowingly discharging significant amounts of listed chemicals into sources of drinking water. Proposition 65 requires California to publish a list of chemicals known to cause cancer, birth defects or other reproductive harm. This list, which must be updated at least once a year, has grown to include approximately 900 chemicals since it was first published in 1987. • What types of chemicals are on the Proposition 65 list?

The list contains a wide range of naturally occurring and synthetic chemicals that include additives or ingredients in pesticides, common household products, food, drugs, dyes, or solvents. Listed chemicals may also be used in manufacturing and construction, or they may be byproducts of chemical processes, such as motor vehicle exhaust.

• What does a warning mean?

If a warning is placed on a product label or posted or distributed at a workplace, a business, or in rental housing, the business issuing the warning is aware or believes that it is exposing individuals to one or more listed chemicals. By law, a warning must be given for listed chemicals unless the exposure is low enough to pose no significant risk of cancer or is significantly below levels observed to cause birth defects or other reproductive harm.

• Where can I get more information on Proposition 65?

If you have specific questions on the administration or implementation of Proposition 65, you can contact OEHHA's Proposition 65 program at P65.Questions@oehha.ca.gov, or by phone at (916) 445-6900.