ASSEMBLY INSTRUCTION

CAUTION: PLEASE READ ALL INSTRUCTIONS BEFORE STARTING THE ASSEMBLY OF THIS PRODUCT. THESE PIECES ARE HEAVY. IN ORDER TO PREVENT PERSONAL INJURY AND ENSURE THAT THIS PRODUCT IS NOT DAMAGED DURING THE ASSEMBLY PROCESS, IT IS STRONGLY RECOMMENDED THAT YOU ENLIST THE ASSISTANCE OF ONE OR MORE PEOPLE.

ATTENTION: VEUILLEZ LIRE TOUTES LES INSTRUCTIONS AVANT DE COMMENCER L'ASSEMBLAGE DE CE PRODUIT. LES PIEOCES SONT LOURDES. POUR EUVITER TOUTE BLESSURE ET POUR VOUS ASSURER QUE LE PRODUIT N'EST PAS ENDOMMAGE'PENDANT L'ASSEMBLAGE, NOUS VOUS RECOMMANDONS DE FAIRE APPEL AO UNE OU PLUSIEURS AUTRES PERSONNES.

CUIDADO: FAVOR DE LEER TODAYS LAS INSTRUCCIONES ANTES DE ENSAMBLAR SU PRODUCTO. ESTAS PIEZAS SON PESADAS. PARA PREVENIR HERIDAS PERSONALES Y ASEGURAR QUE SU PRODUCTO NO SEA DAN ADO MIENTRAS ES ENSAMBLADO, SE RECOMIENDA LA ASISTENCIA DE UNA O MAUS PERSONAS.

WARNING.....PROTECTIVE GLIDE IS PLACED UNDER LEGS OF FURNITURE TO RESIST SCRATCHES TO FLOOR SURFACE. SOME FLOOR SURFACES CAN BE EXTRA SENSITIVE TO MARKING. IF YOU ARE NOT SURE CONSULT WITH YOUR DEALER.

AVERTISSEMENT... LES PIEDS DES MEUBLES SONT MUNIS DE PATINS DESTINÉS À PROÉGER LE PLANCHER. CERTAINS REVÊTEMENTS DE SOL PEUVENT ÊTRE TRÈS FRAGILES. EN CAS DE DOUTE, CONSULTER LE MARCHAND.

Important: Tighten firm but do not over tighten

STEP 1

Assemble Left Leg (03) to the Upholstered Frame (01) using Bolt (A), Lock Washer (B), Flat Washer (C) and Allen Wrench (D).

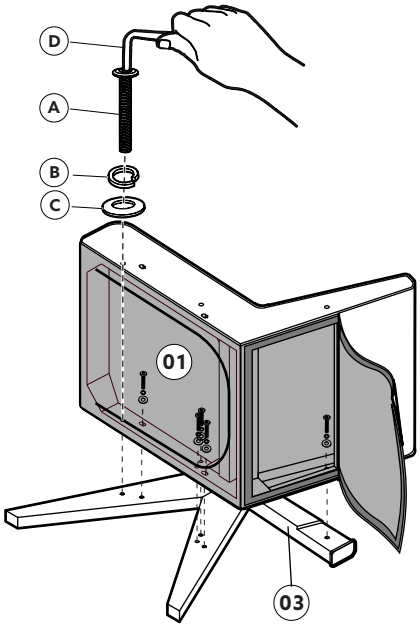

STEP 2

Assemble Right Leg (02) to the Upholstered Frame (01) using Bolt (A), Lock Washer (B), Flat Washer (C) and Allen Wrench (D).

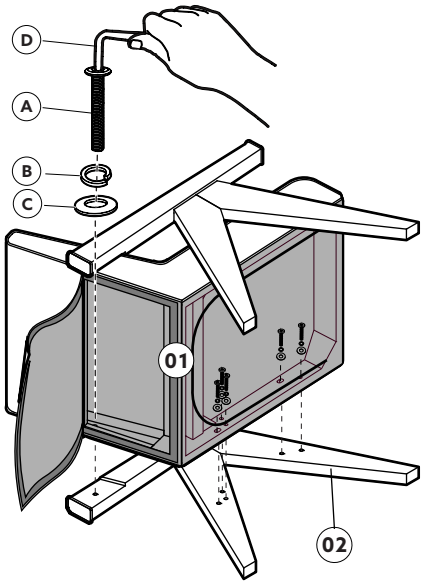

Complete

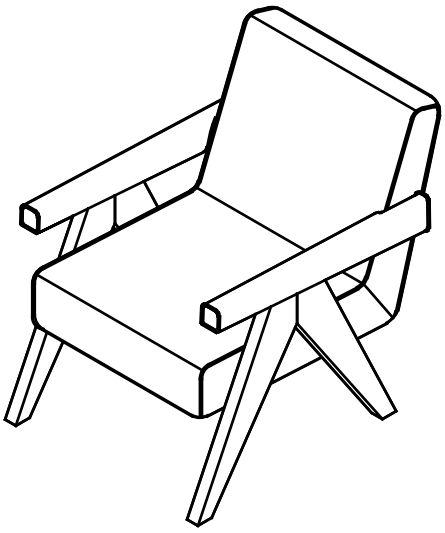

PART LIST		
01	UPHOLSTERED FRAME	
02	RIGHT LEG	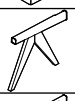
03	LEFT LEG	

HARDWARE LIST			
NO.		DESCRIPTION	Q' ty
A		BOLT (Ø5/16"*55mm)	12
B		LOCK WASHER (5/16")	12
C		FLAT WASHER (5/16"*19mm)	12
D		ALLEN WRENCH (5mm)	1

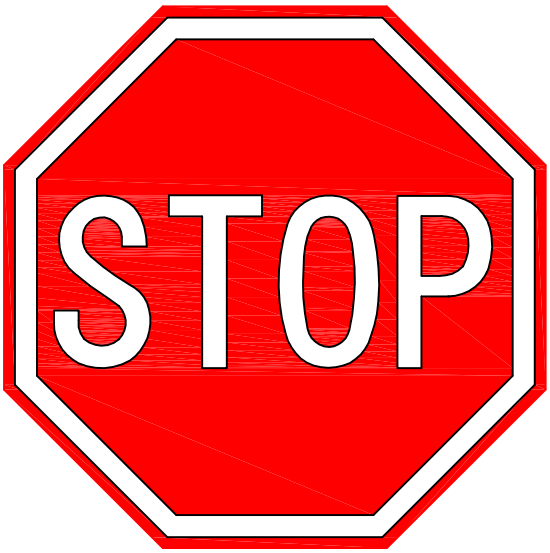

******IMPORTANT MESSAGE*******

Please check to insure you have received all parts listed on the instruction sheet provided. If you did not receive all parts or received damaged parts please us

You will need to provide the item number purchased, your reference number,and identify which part is missing/damaged,all parts orders are considered priority.

Thank You