Cupboard

Installation Instructions

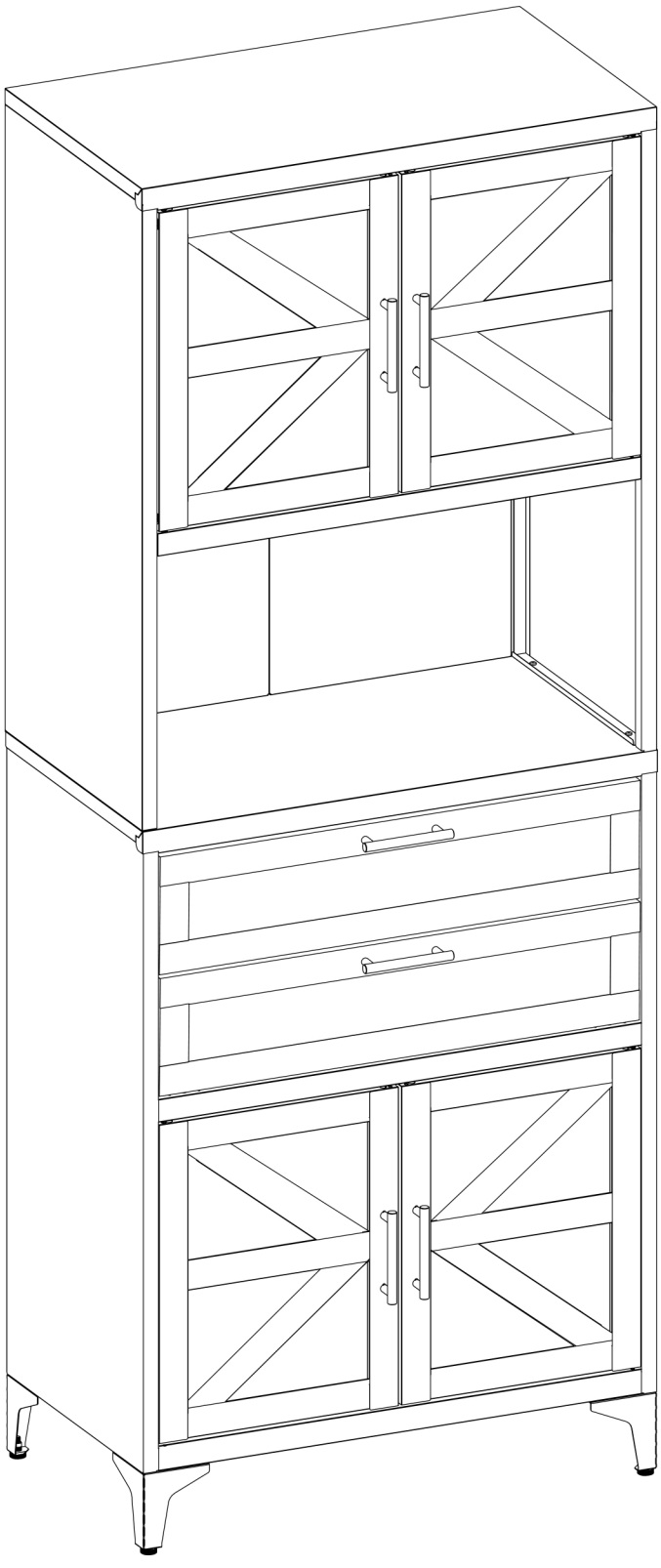

Thanks for choosing our goods. Before Install the goods must read carefully on our instal manual first if still have install problem or other things can contact our after-sales team.

Installation accessories

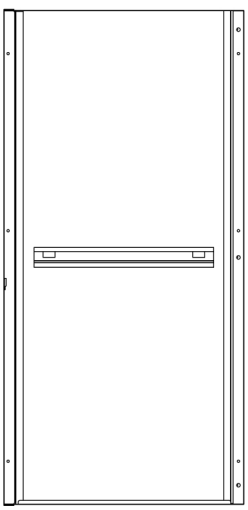

A *1

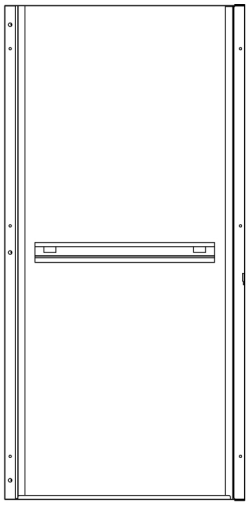

B *1

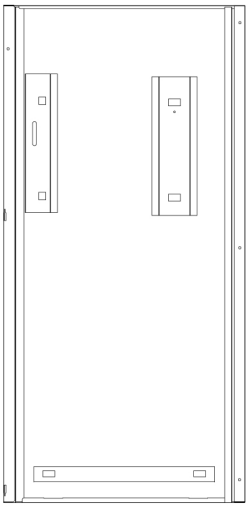

C *1

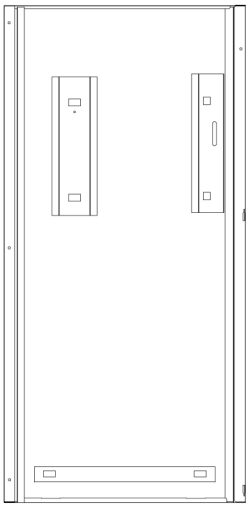

D *1

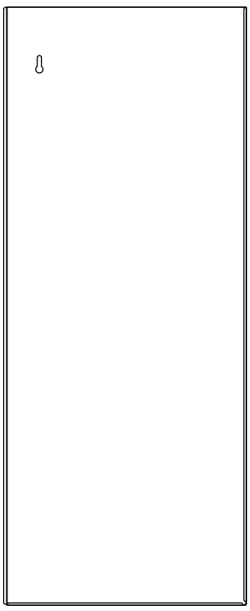

E *1

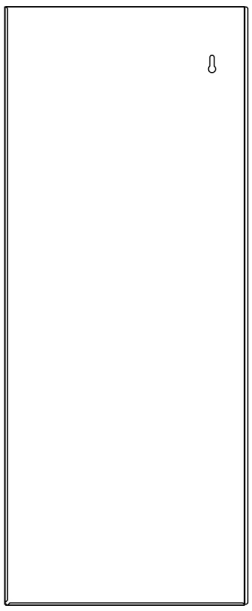

F *1

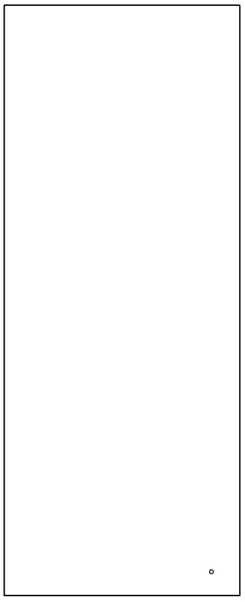

G *1

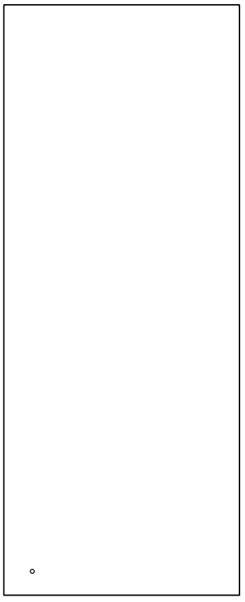

H *1

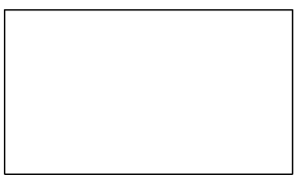

I *1

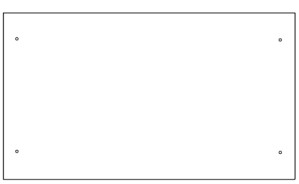

J *1

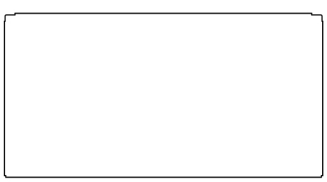

K ×2

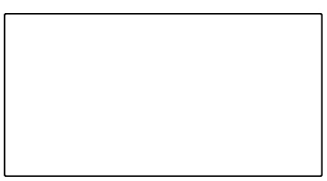

L ×2

Installation accessories

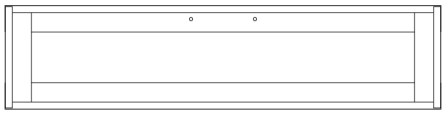

M *2

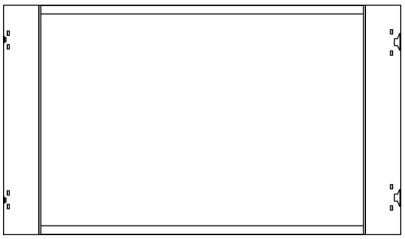

N *2



O *2



P *3

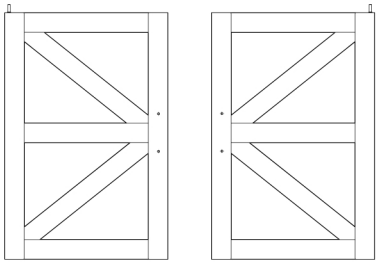

S *2 R *2

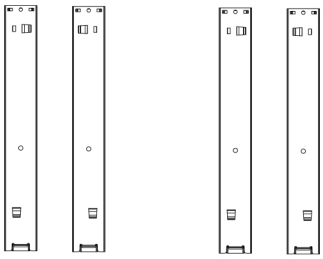

U *2 V *2

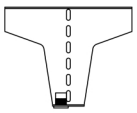

Q *4

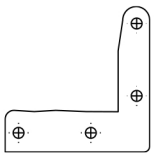

T *4

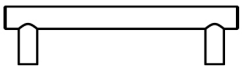

e *6

a *76



b *10



d *10



f ×4

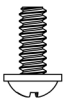

g ×8



h ×4

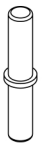

i ×8



j ×4



l ×14



m ×4



n ×4



p ×2

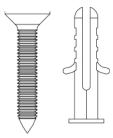

q ×8



glove



screwdriver

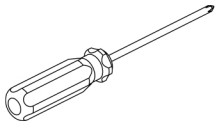

*Extra fittings used as backup

Step1

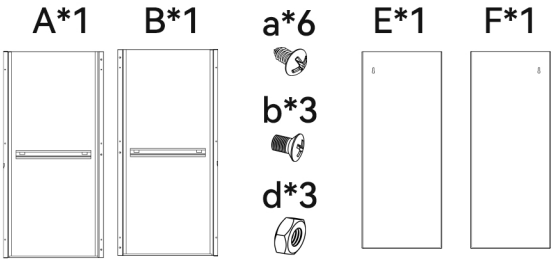

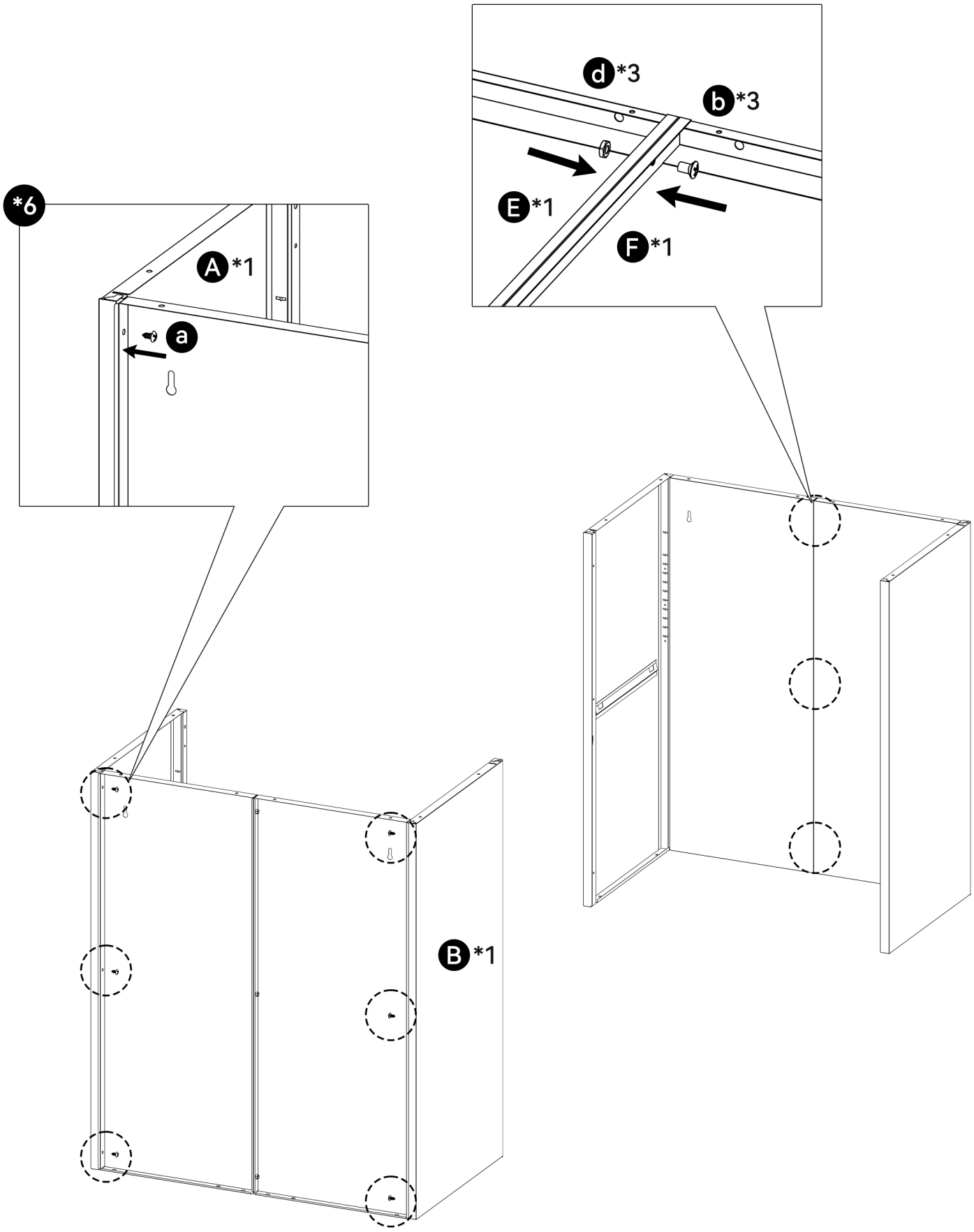

Step2

a*4



P*1

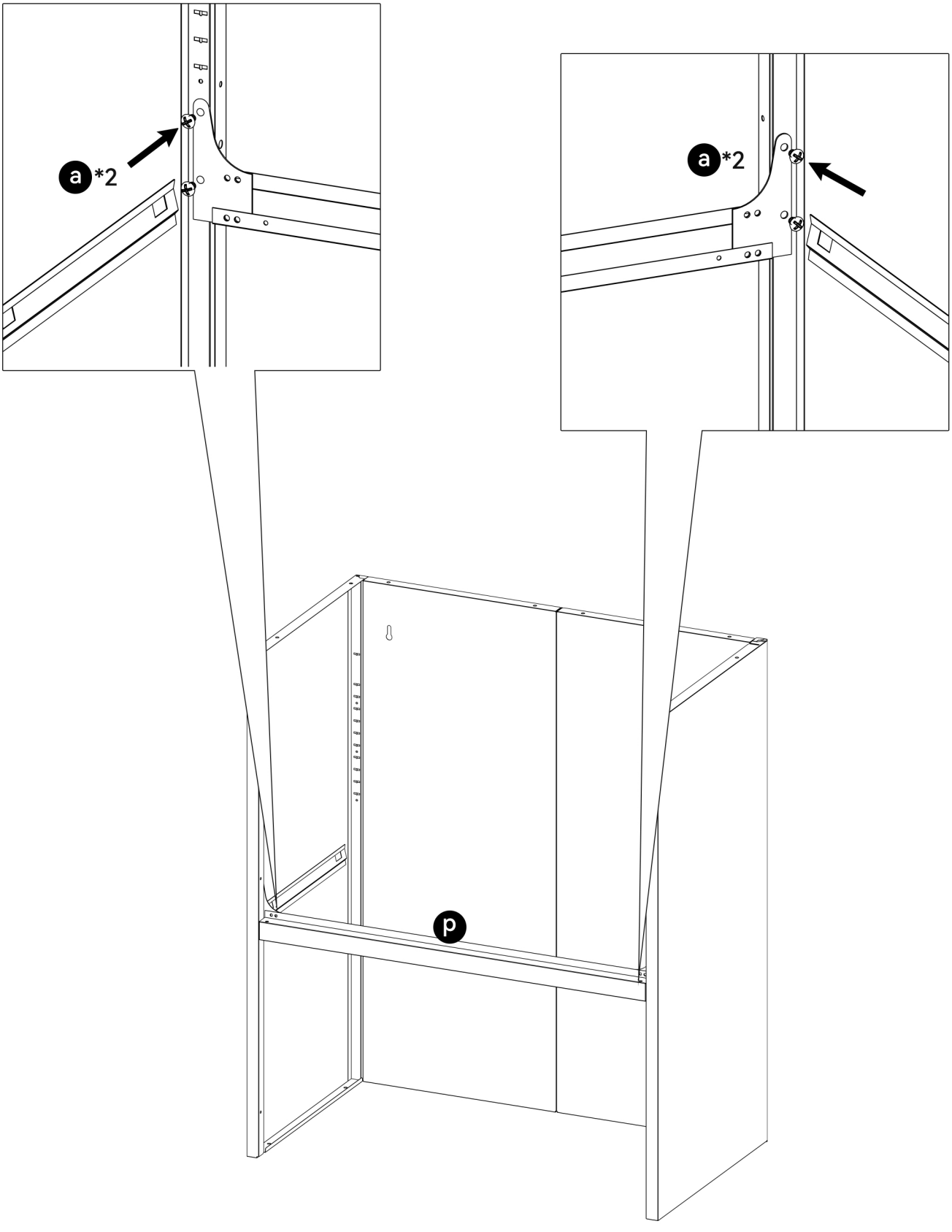

Step3

k*1

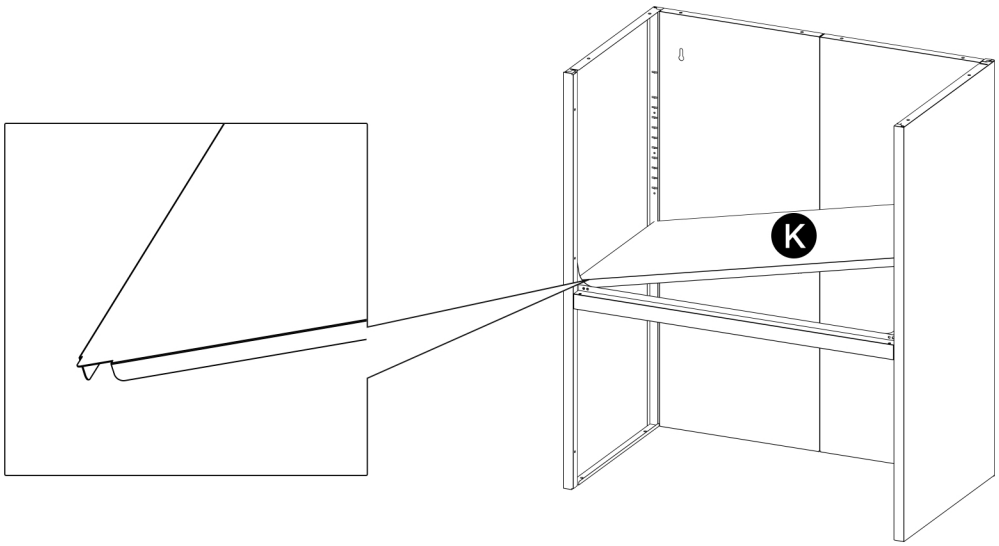

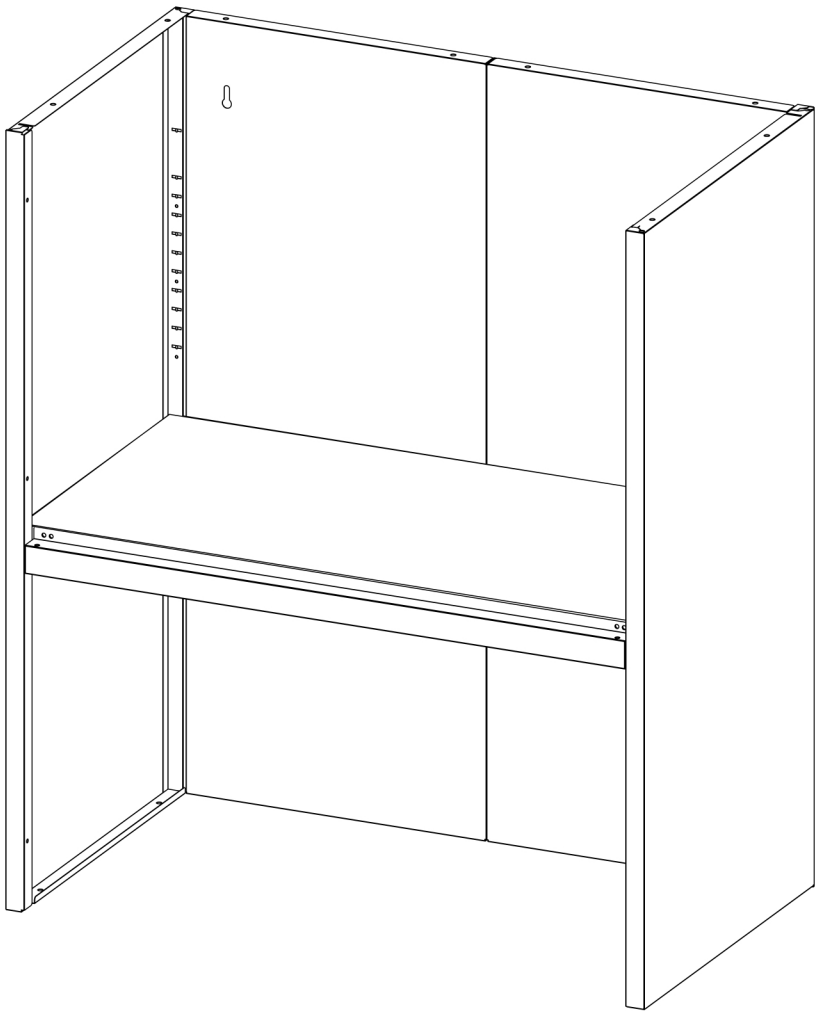

Please pay attention to the installation direction of the connecting strip up and down.

Step4

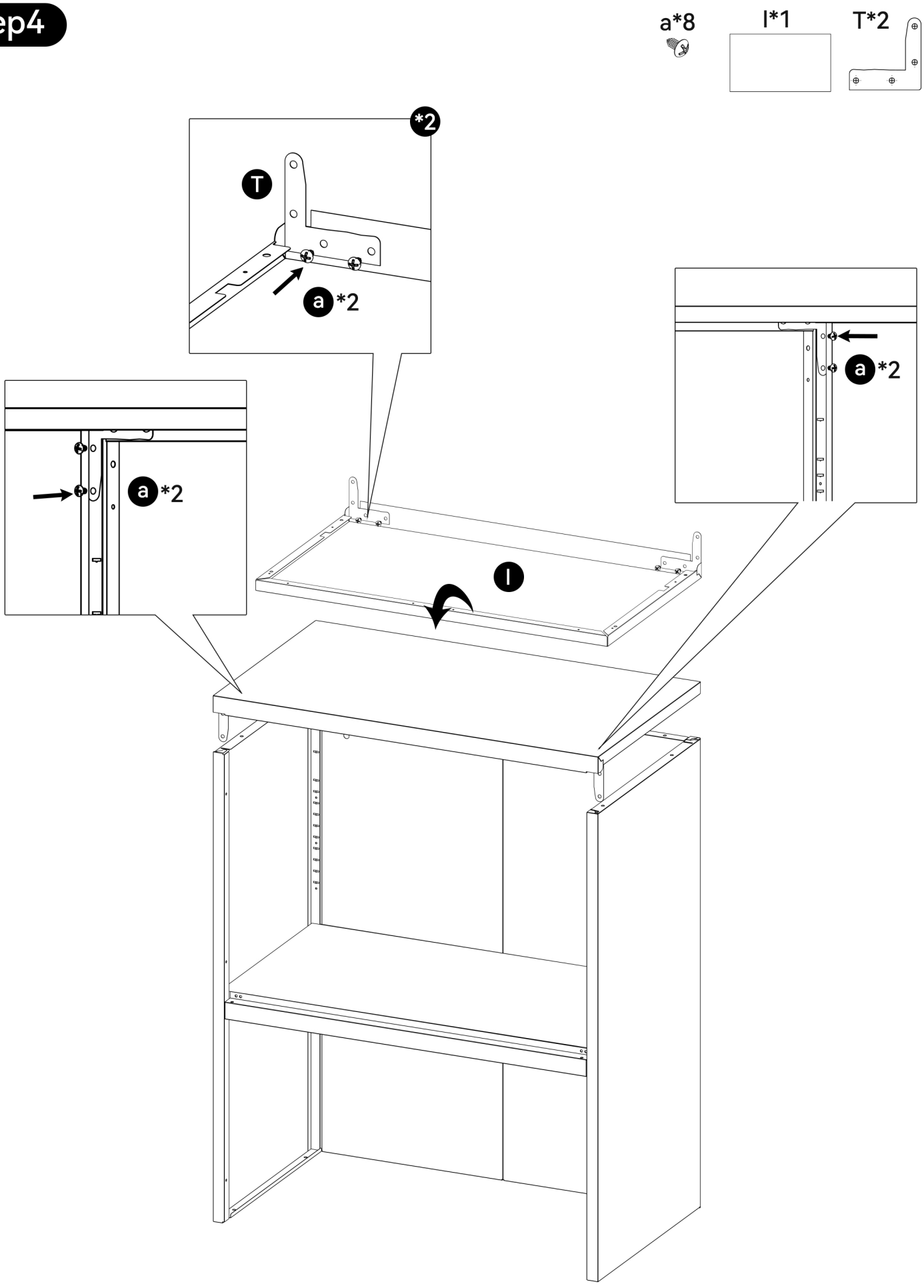

Please pay attention to the installation direction of the connecting strip up and down.

Step4-1

a*8

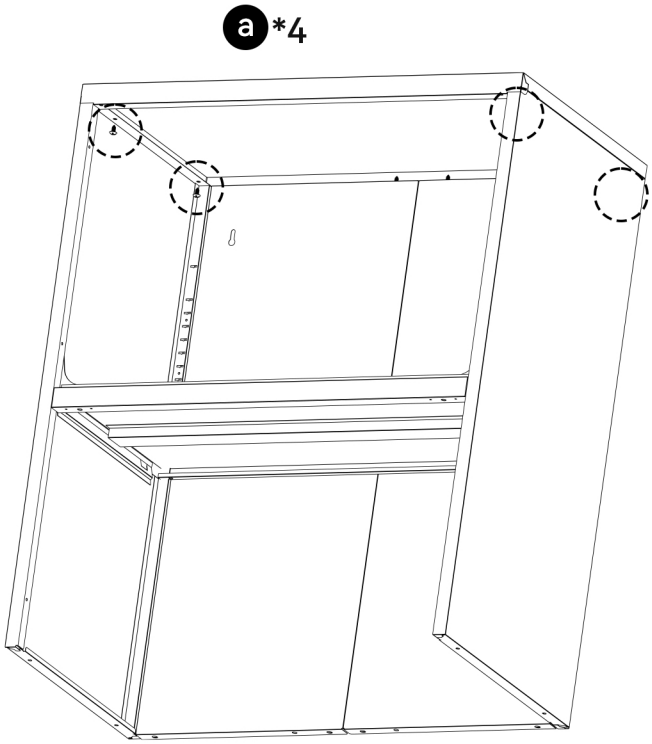

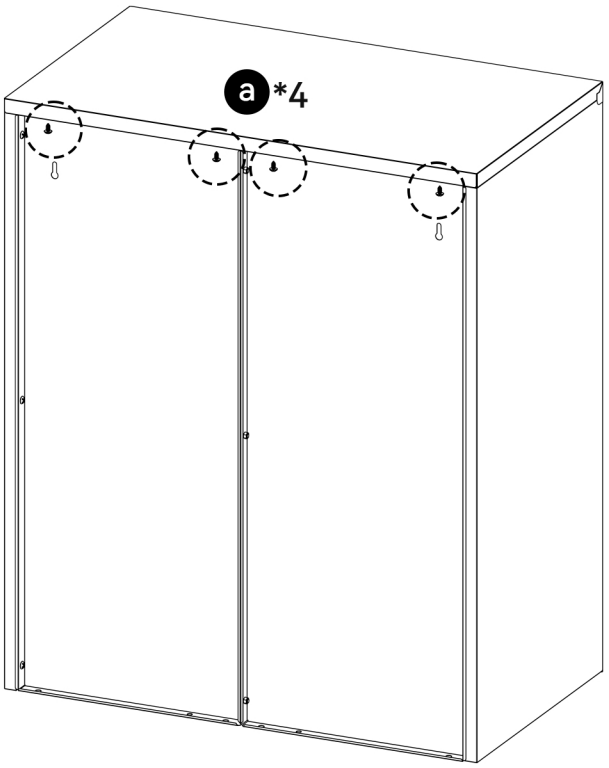

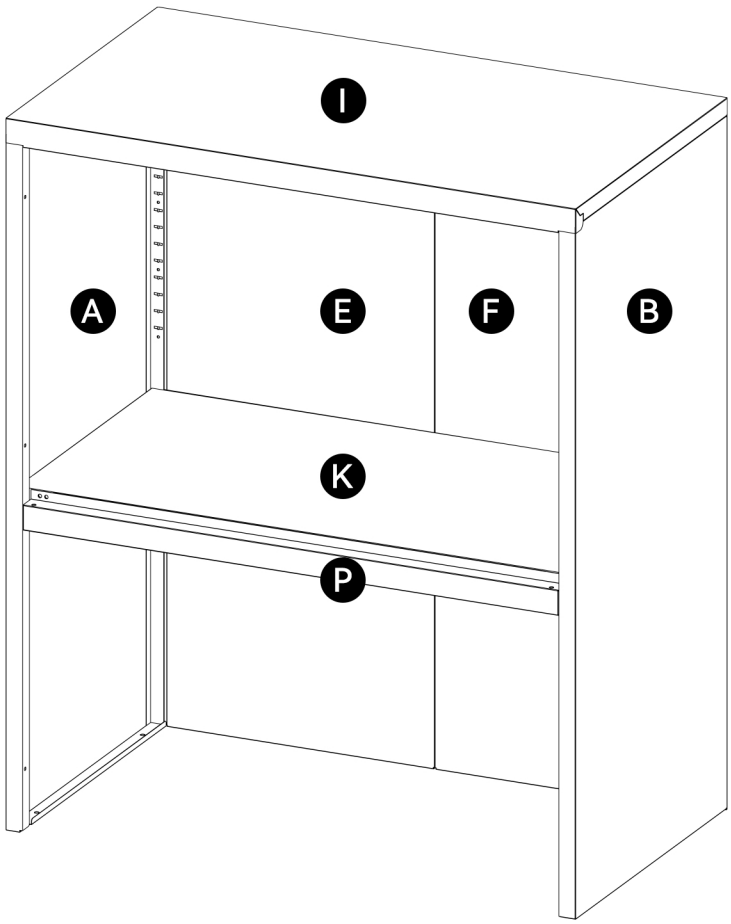

Step5

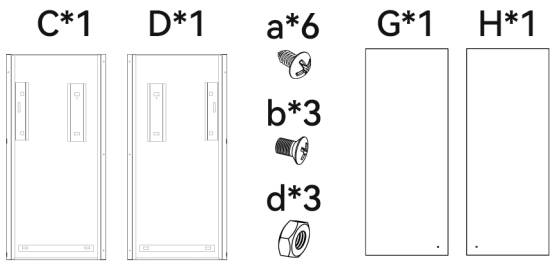

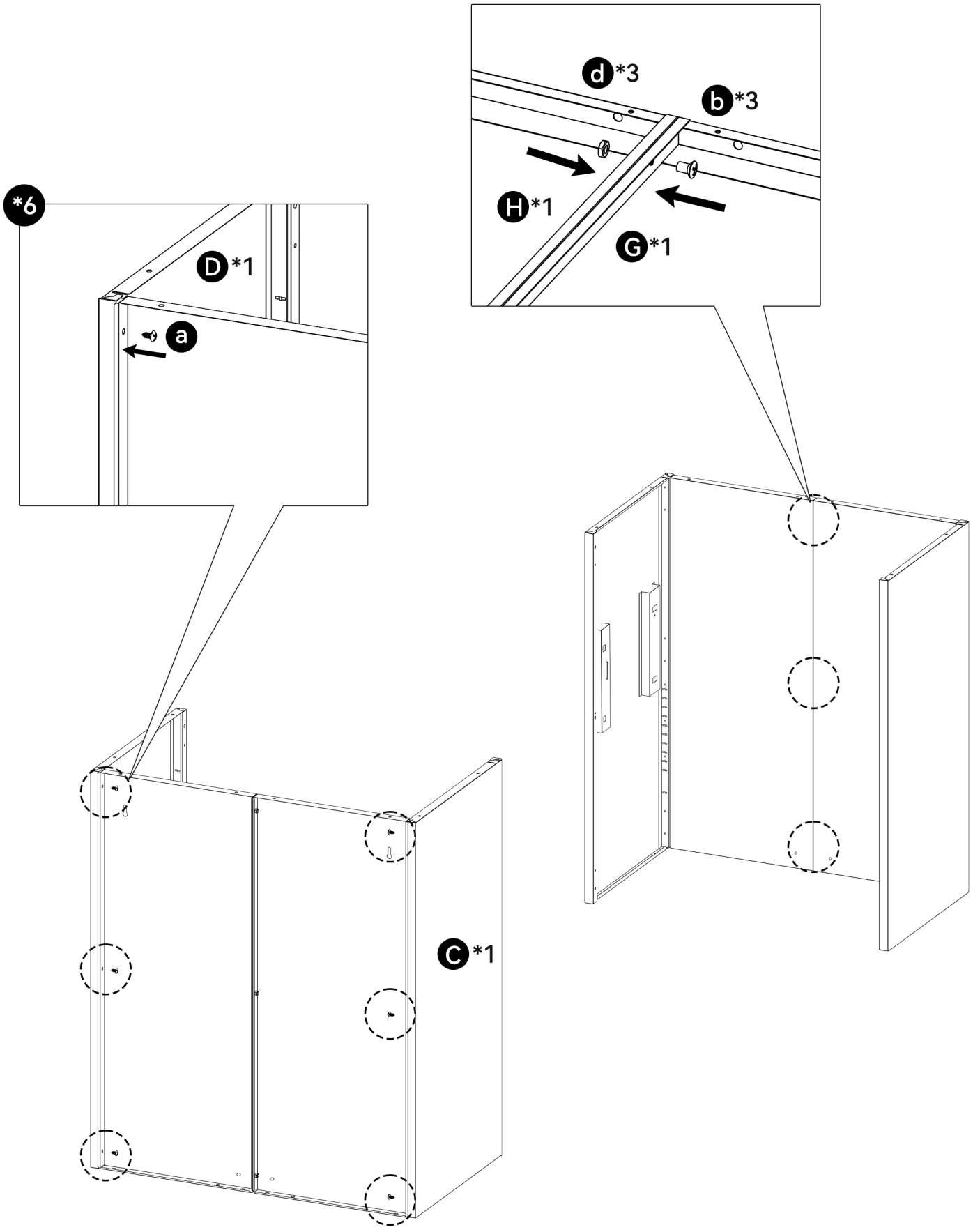

Step5-1

a*8

P*2

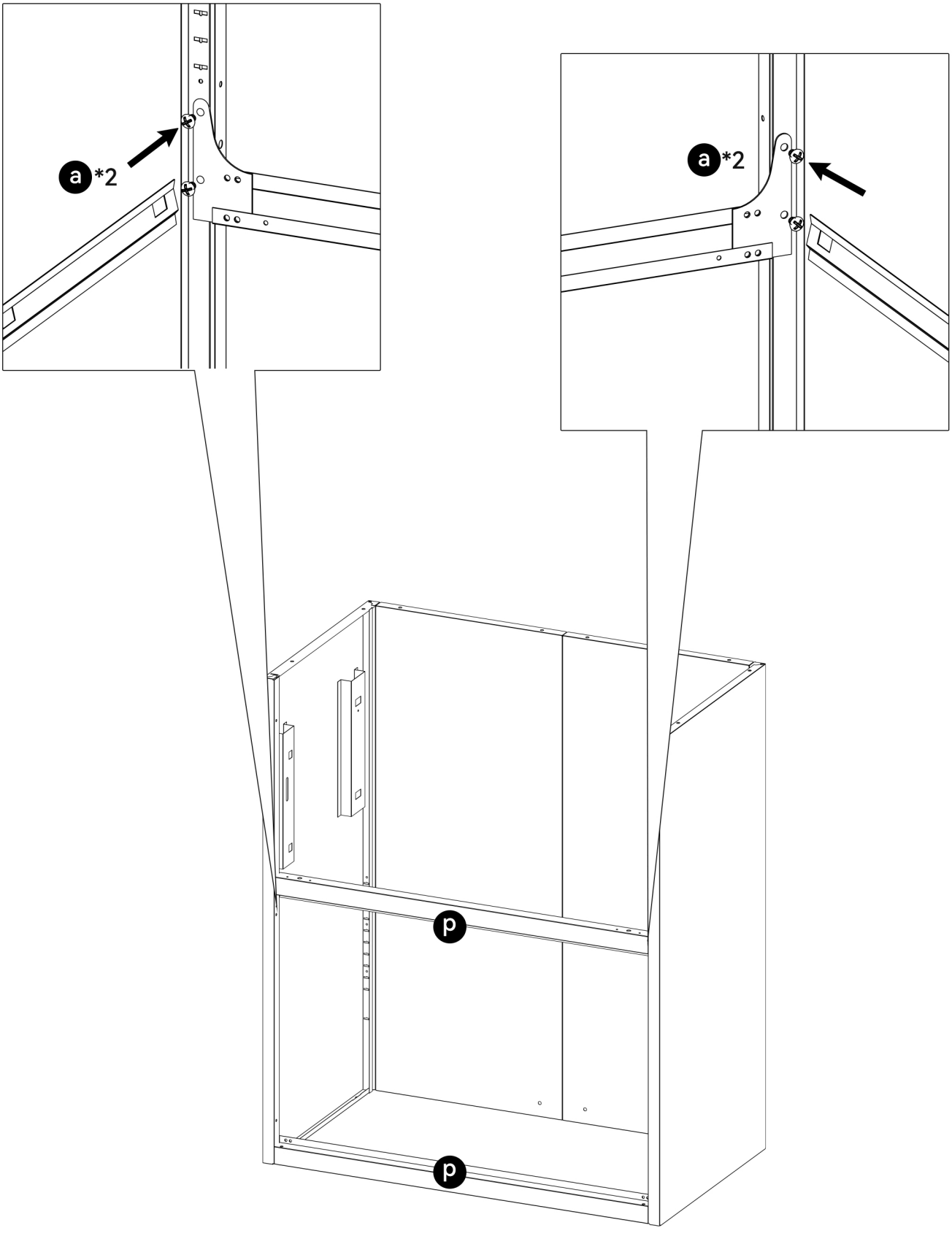

Step6

a*2

k*1

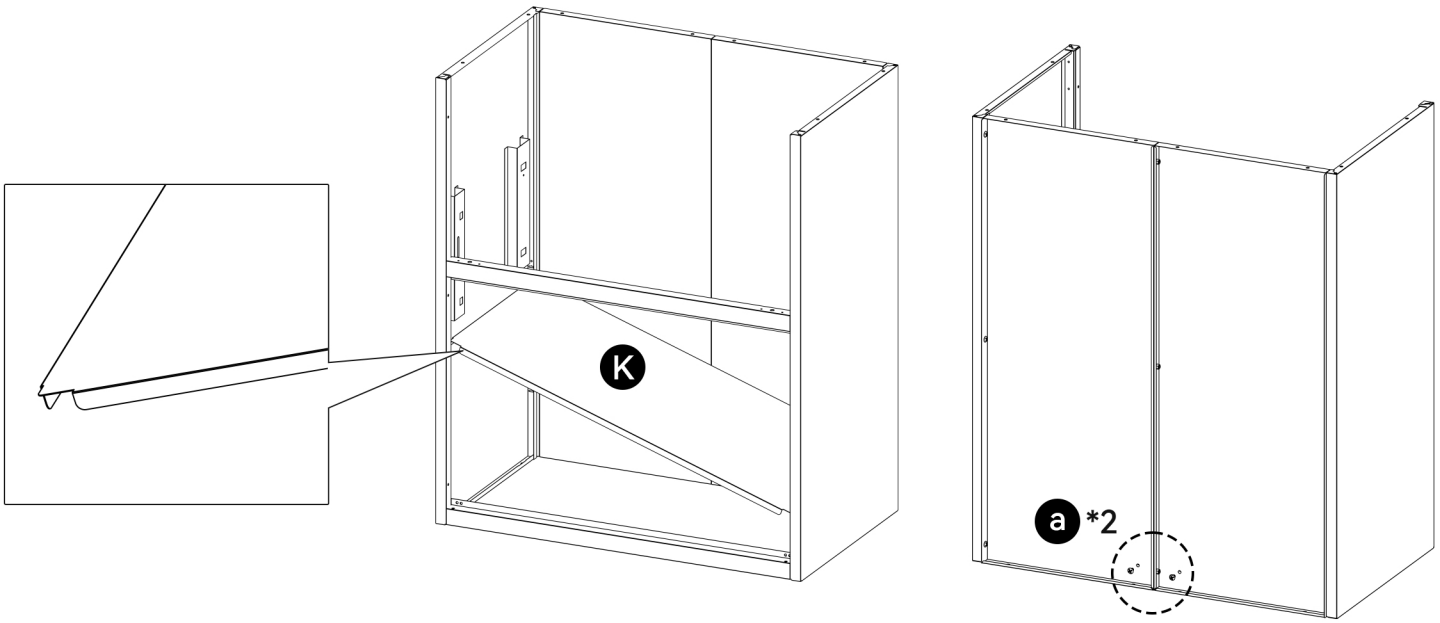

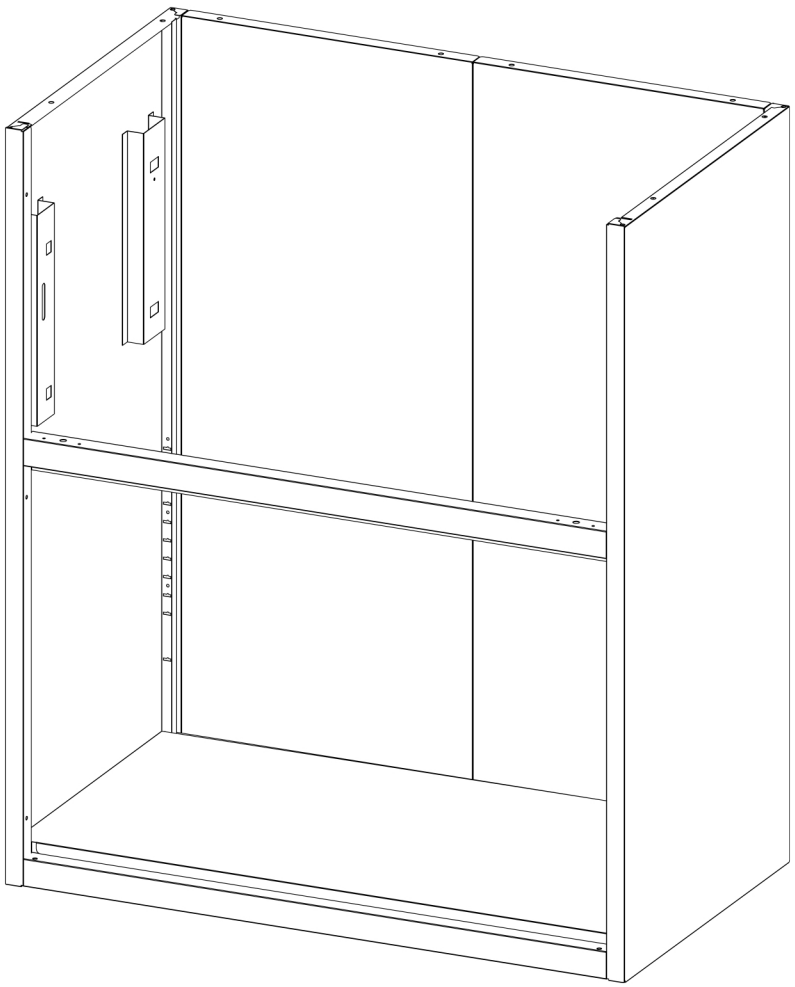

Please pay attention to the installation direction of the connecting strip up and down.

Step7

a*8 J*1 T*2

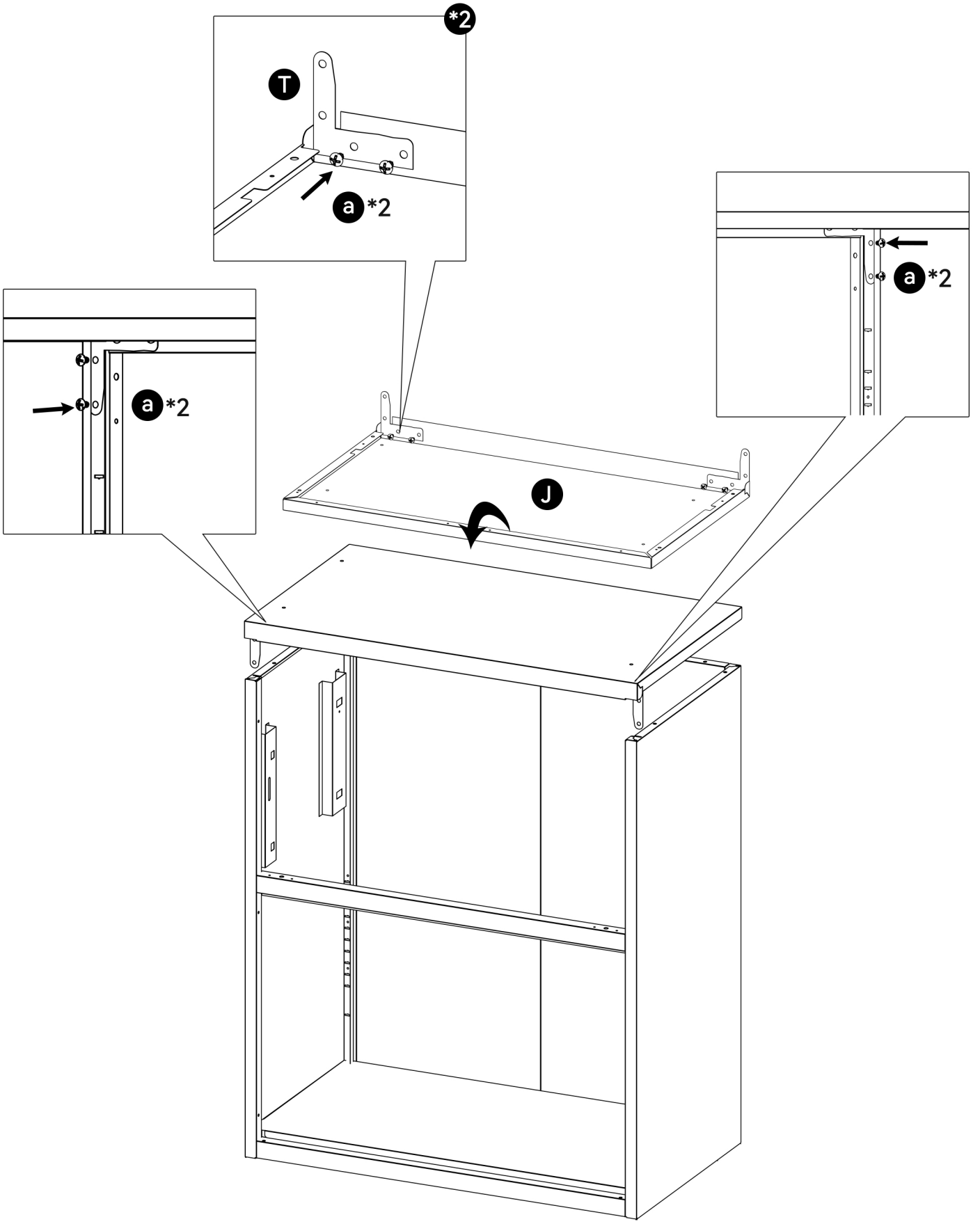

Please pay attention to the installation direction of the connecting strip up and down.

Step7-1

a*8

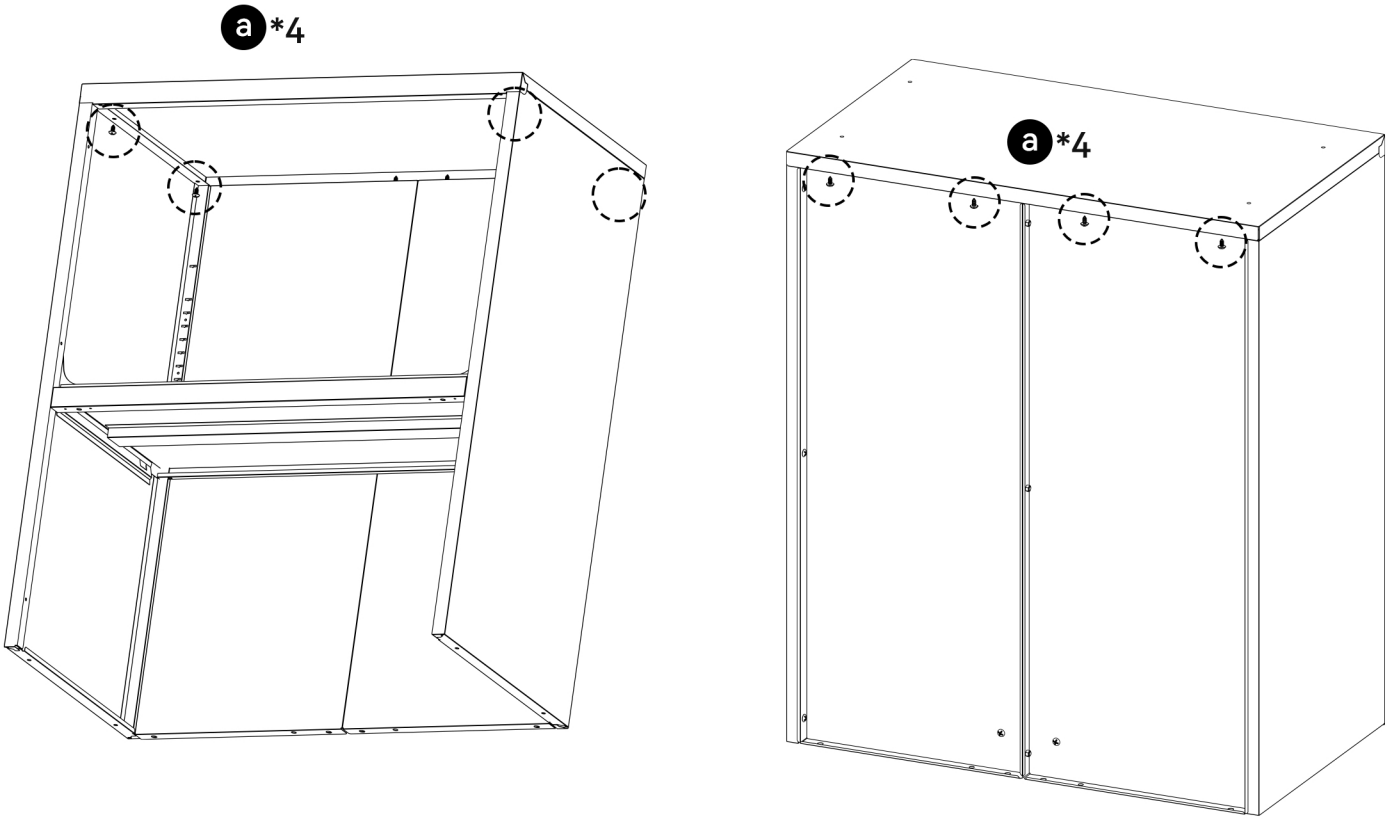

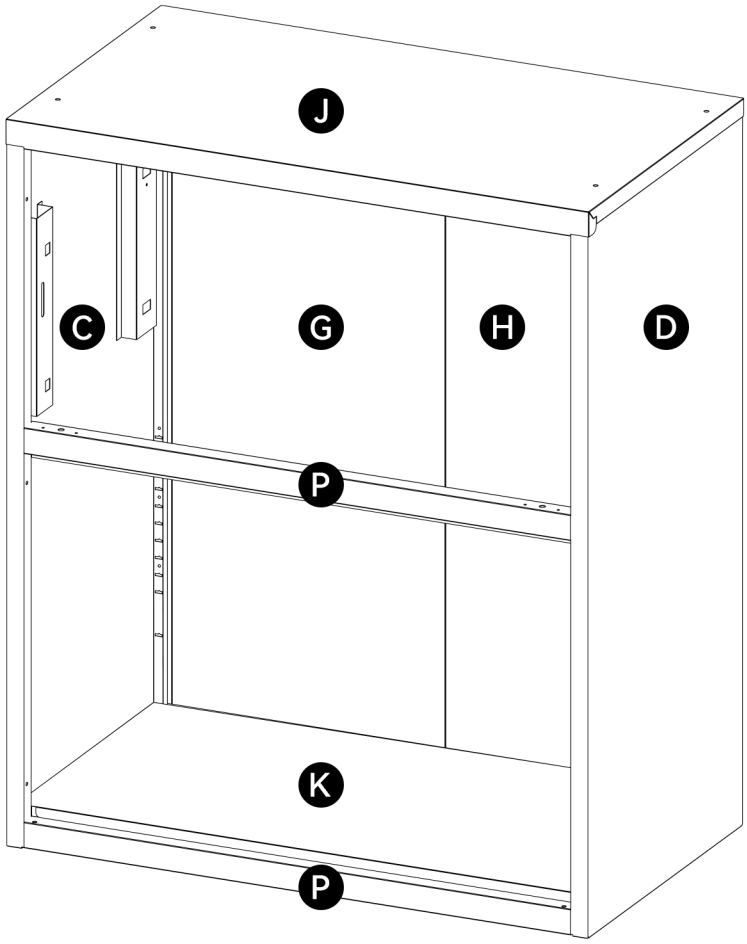

Step8

a*16 j*4 Q*4

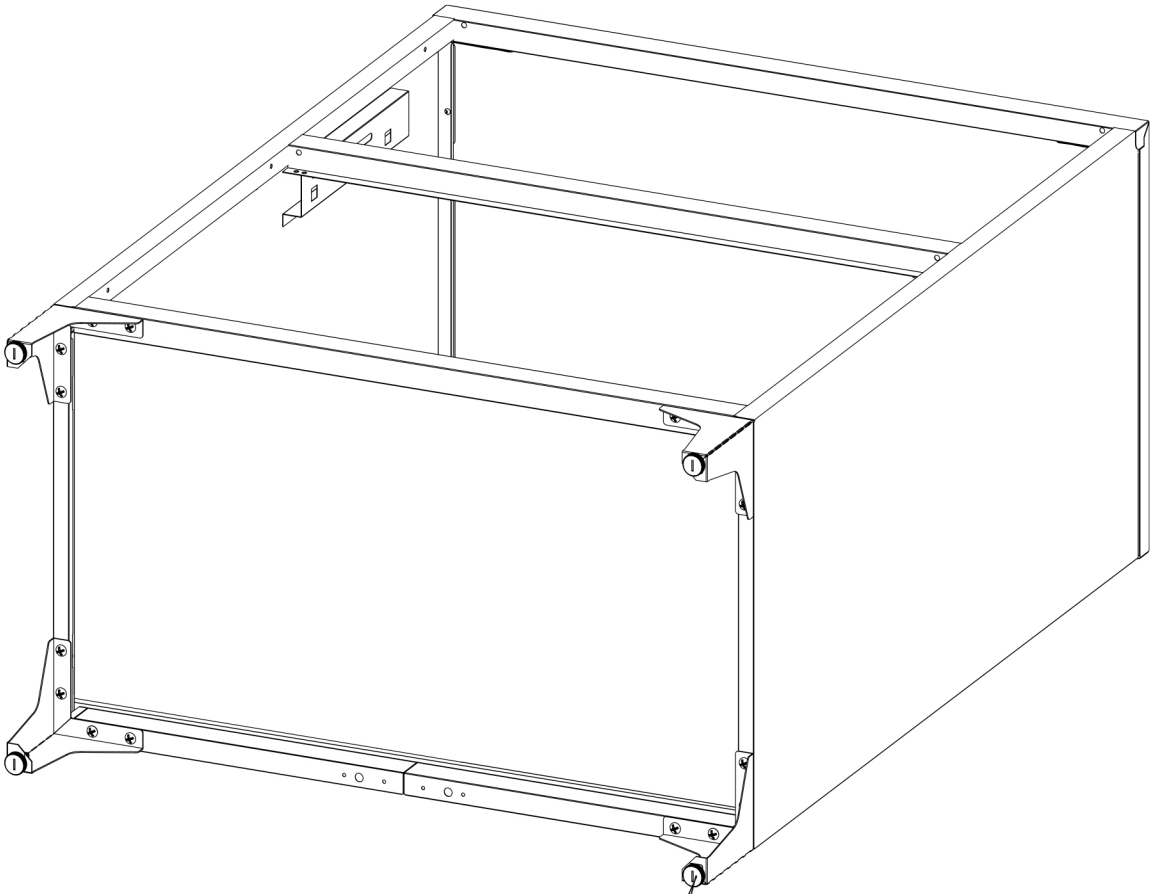

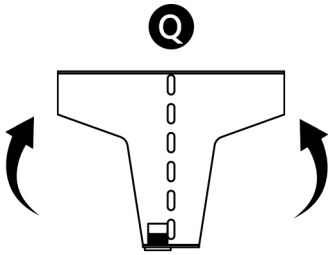

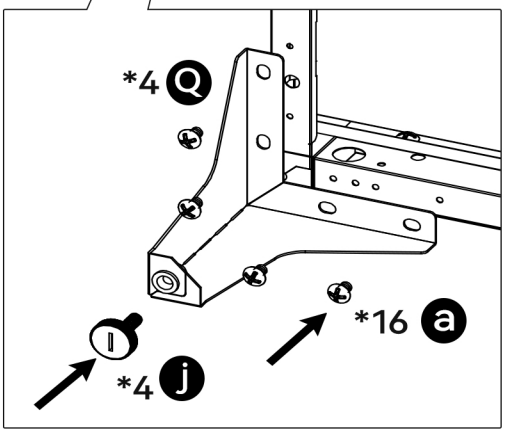

Step9

a*2 b*4 d*4

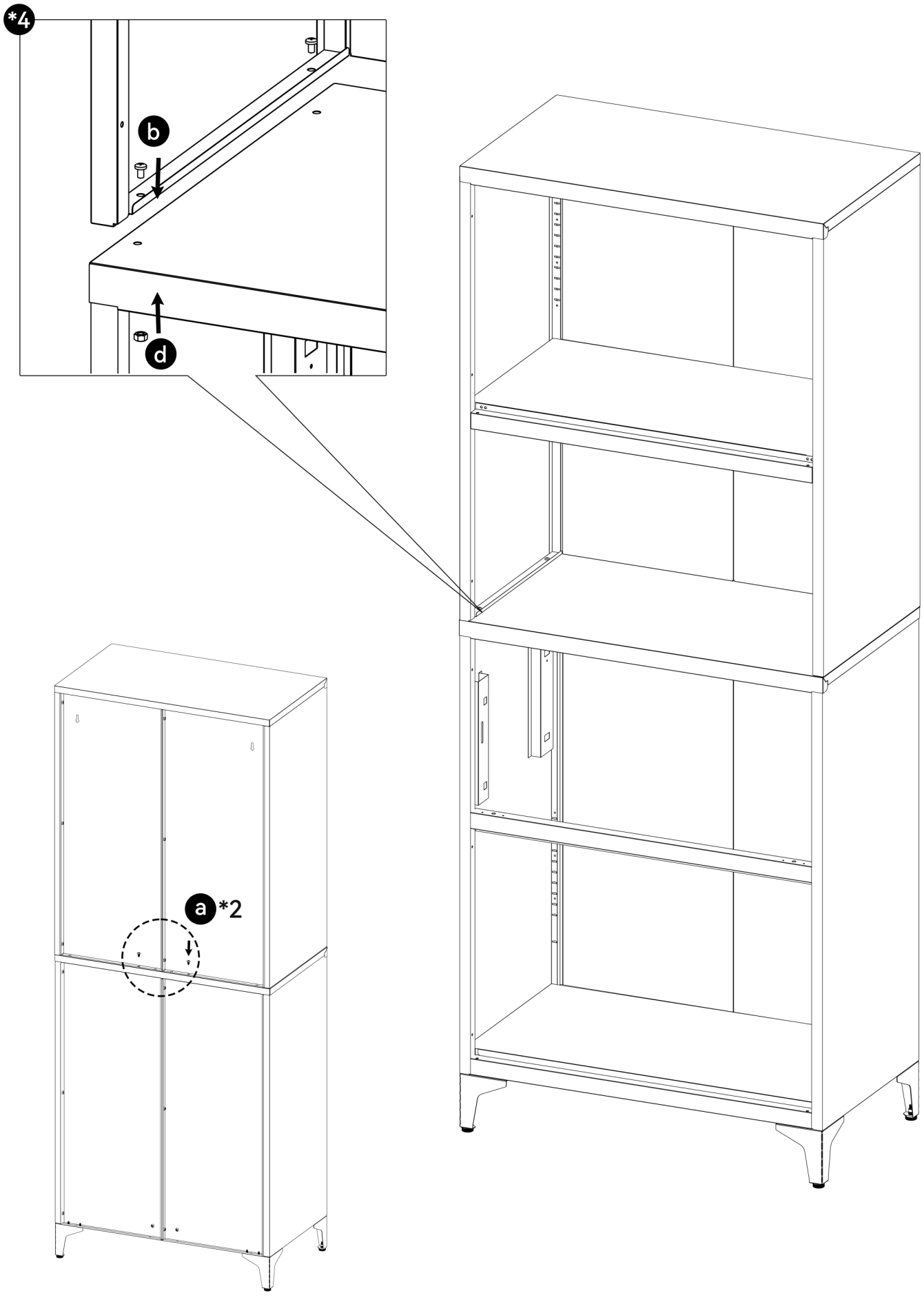

Step10



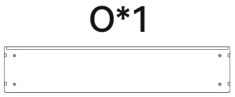



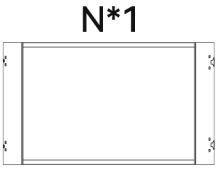





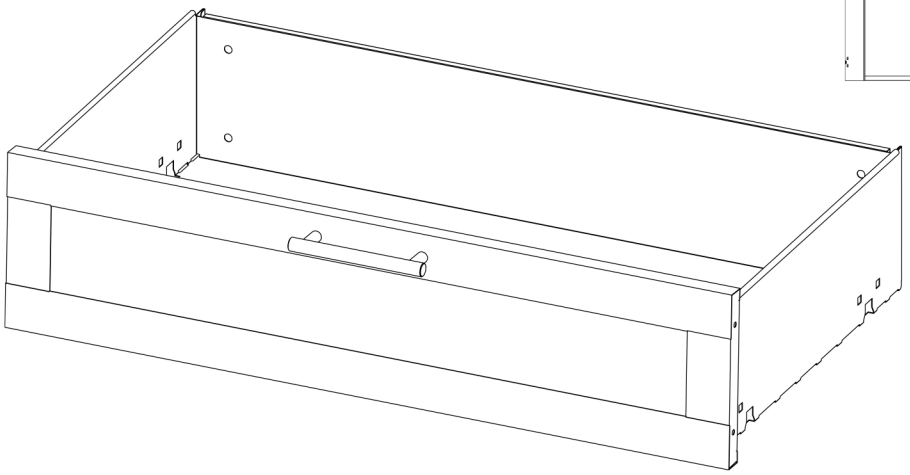

①

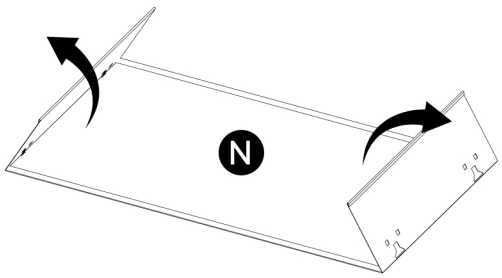

②

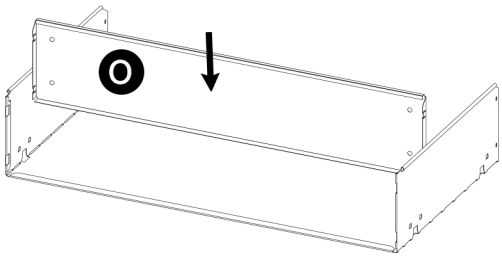

③

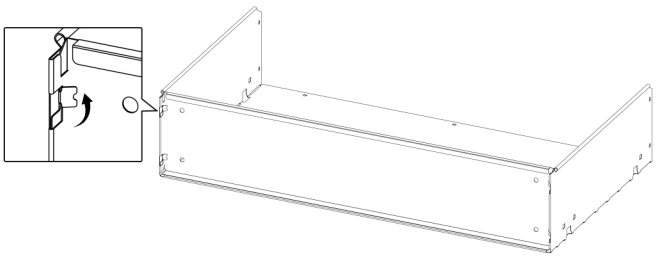

④

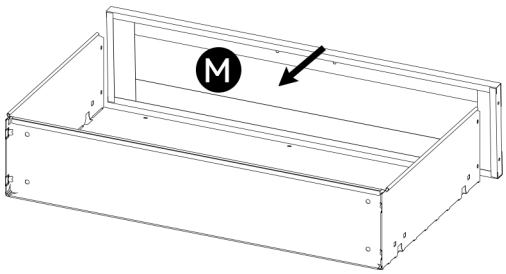

⑤

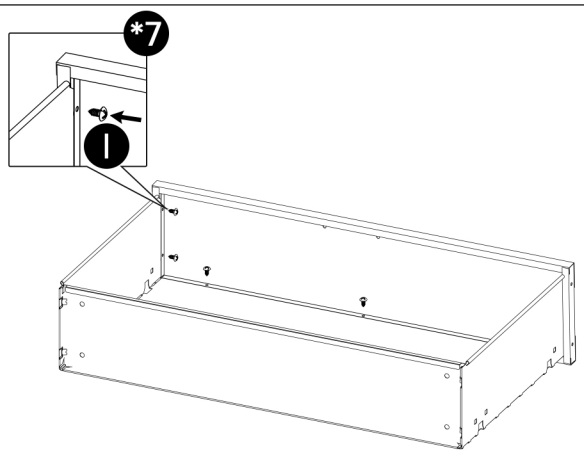

⑥

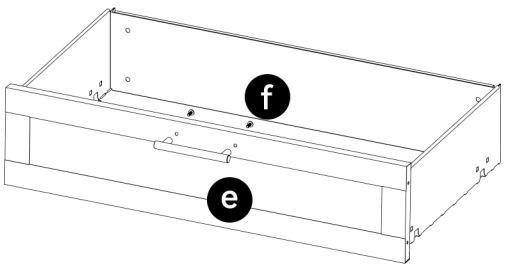

Step11

U*2

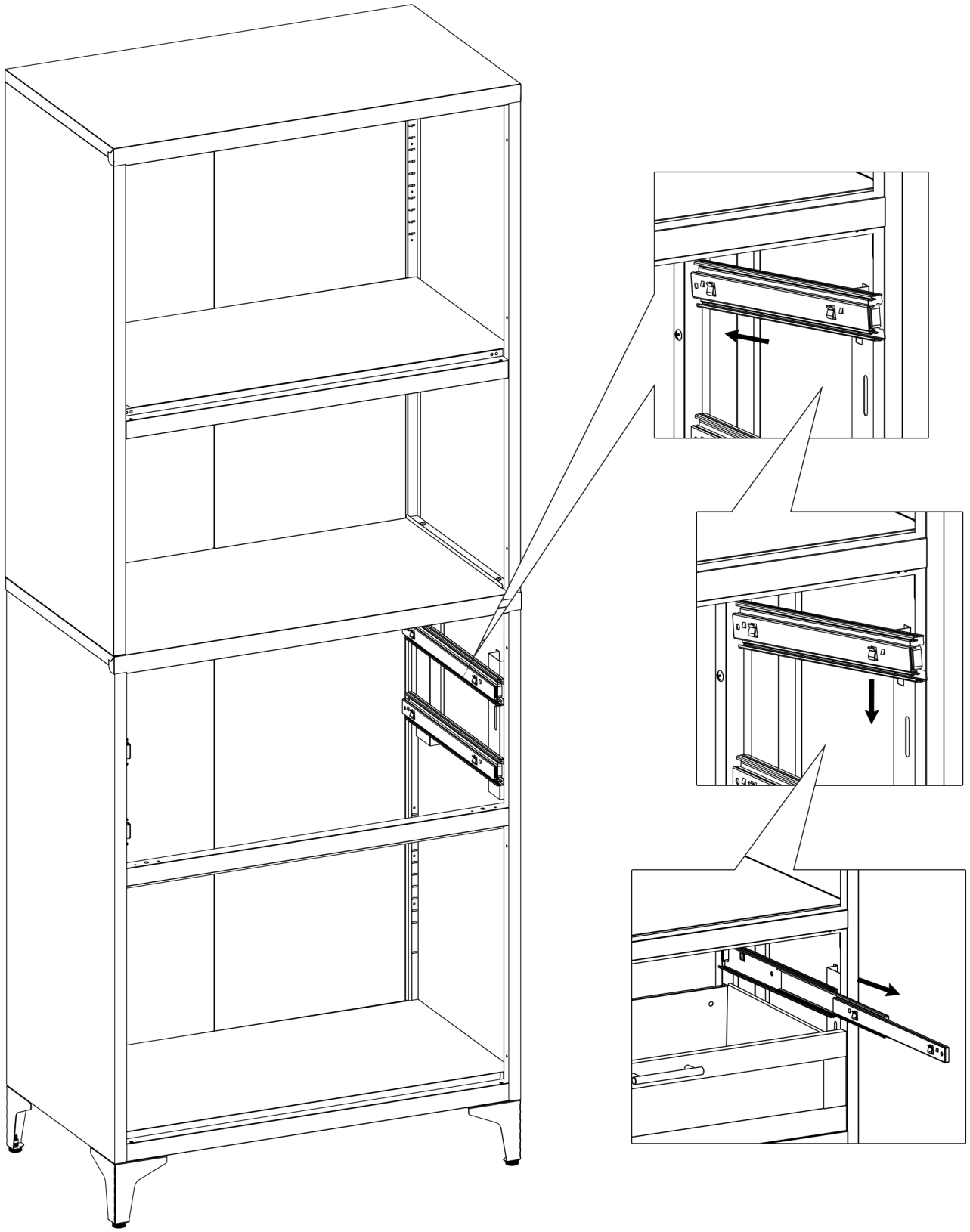

Step11-1

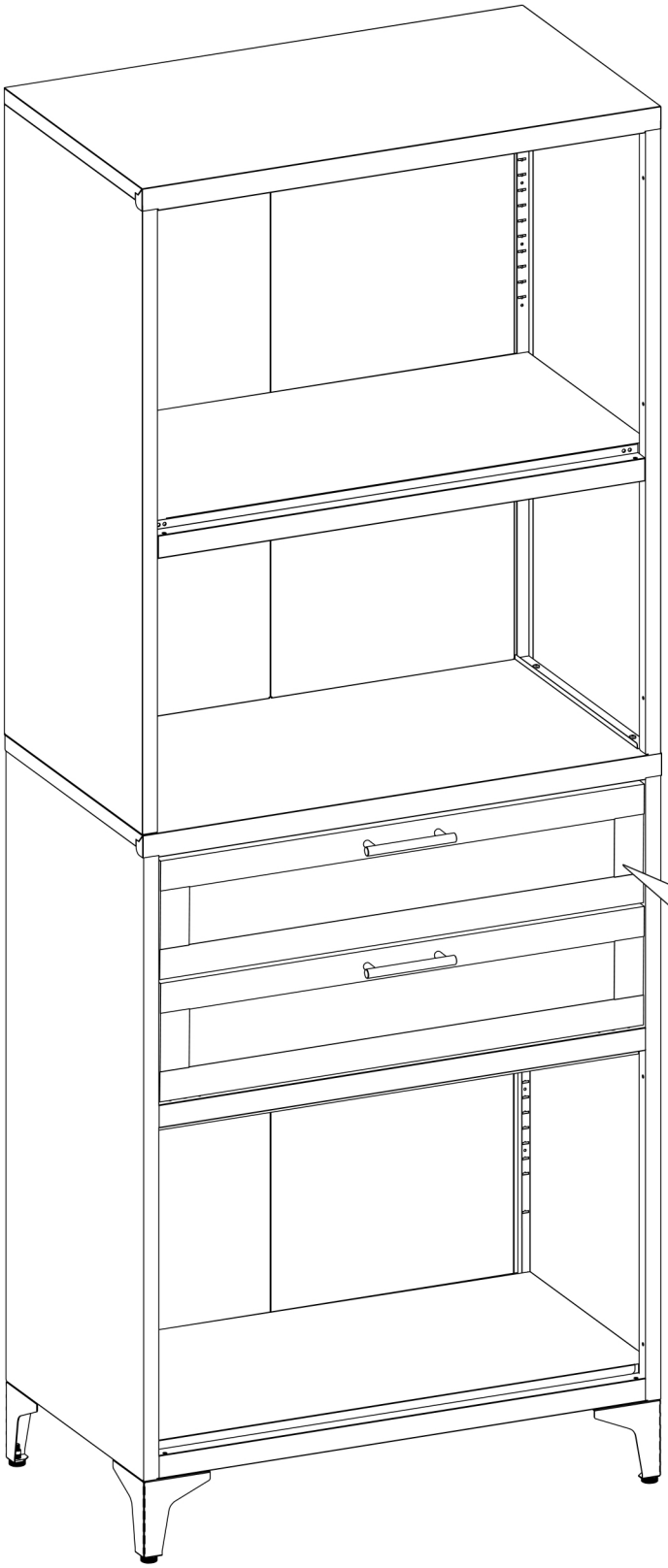

The buckle must be pressed all the way down, otherwise the drawer cannot be pushed into the cabinet.

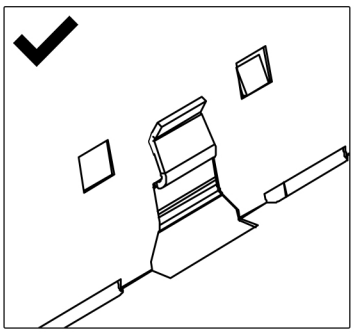

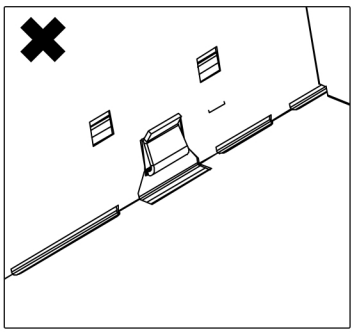

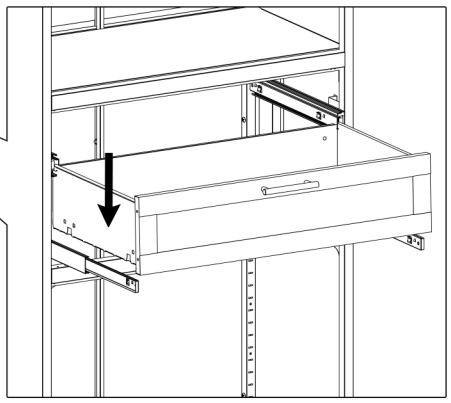

Step11-2

p*2

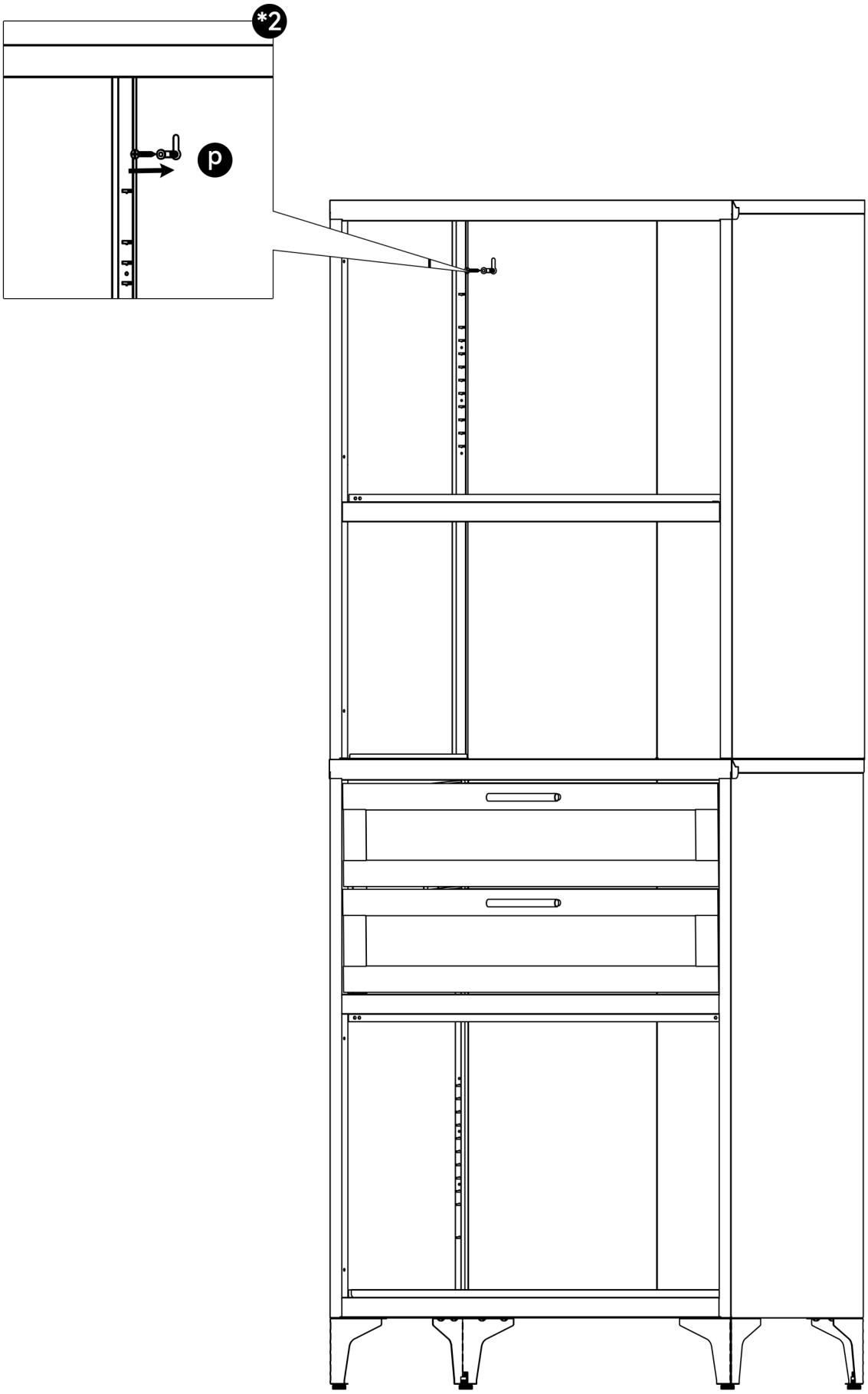

Step12

L*2



q*8



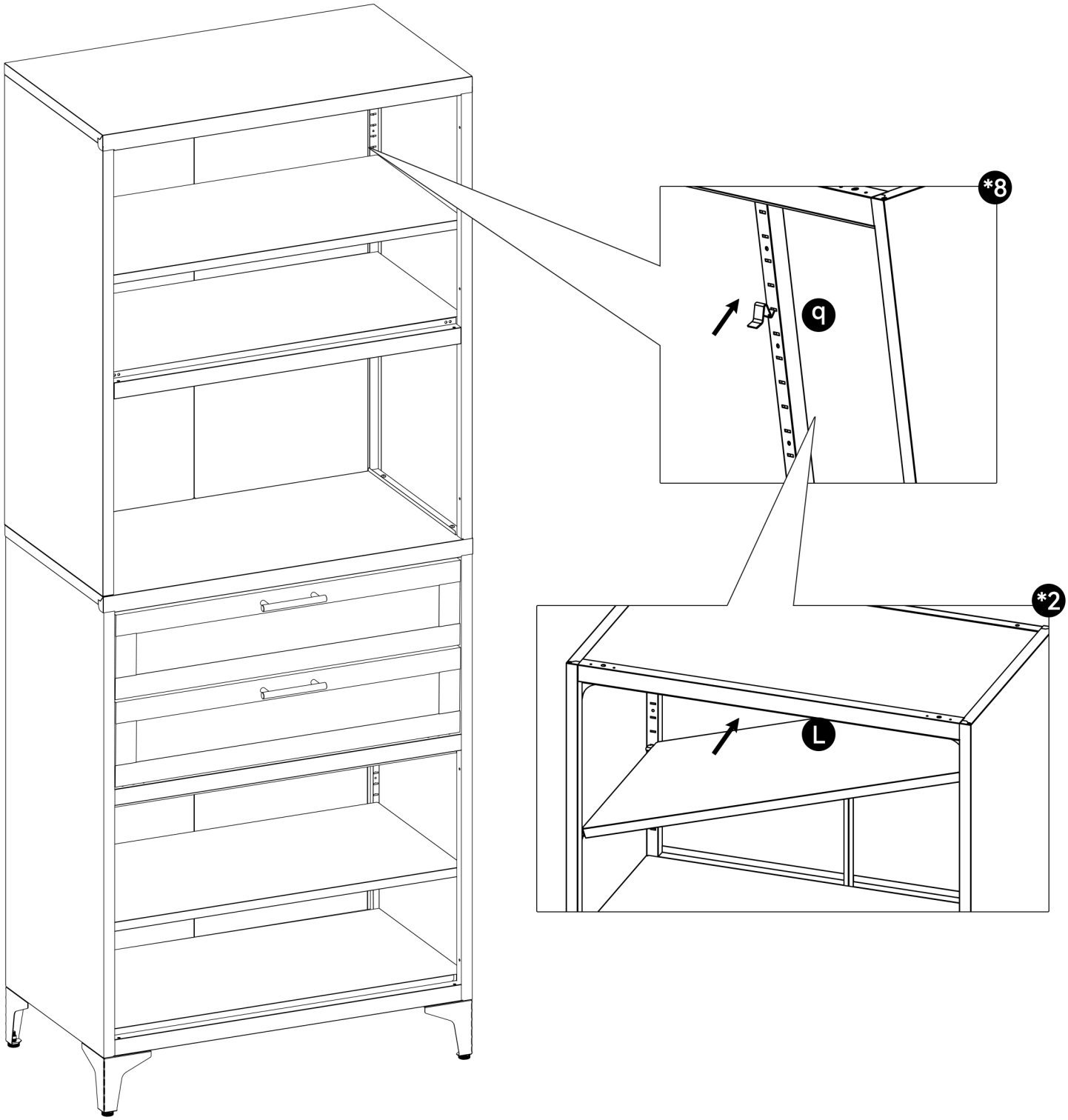

Step12-1

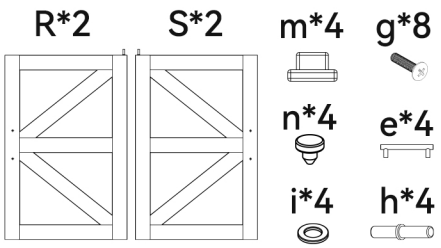

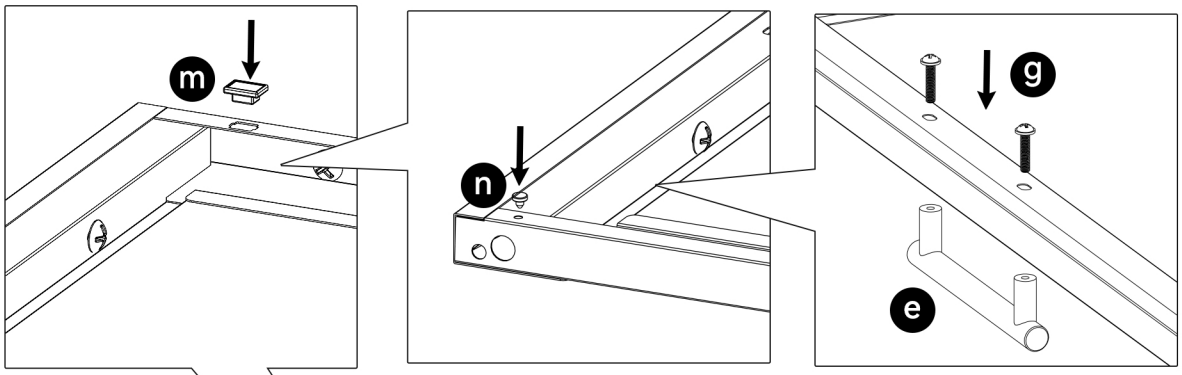

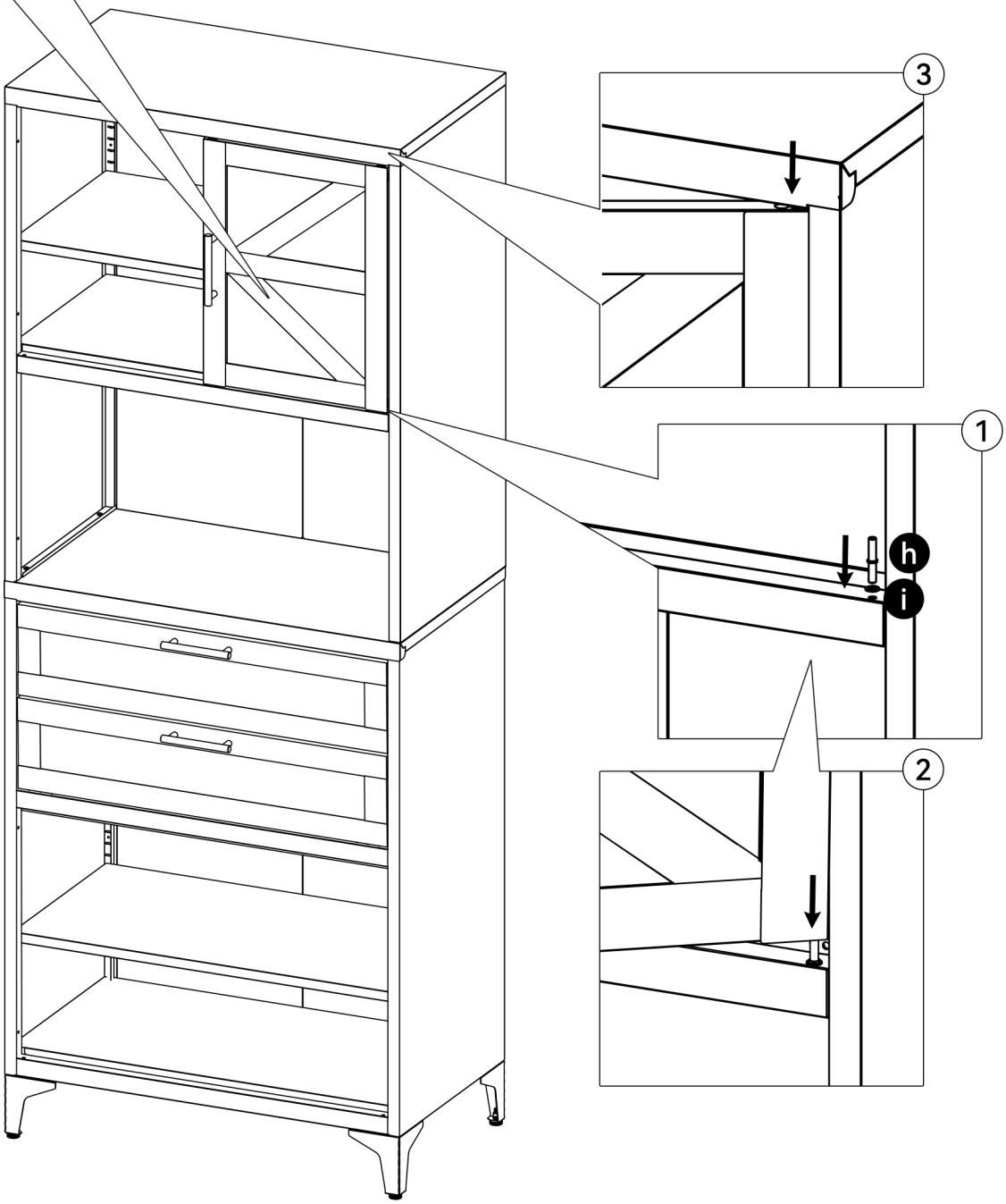

Step12-2

